AS052014

Dreyer Electronics

www.dreyerelectronics.com

20x14mm Knurled Knob With Set Screw

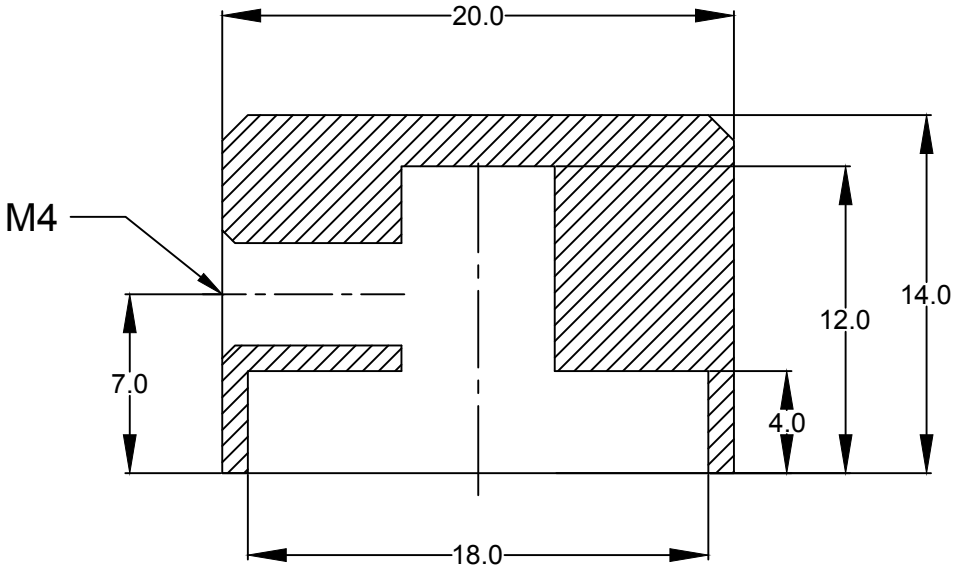

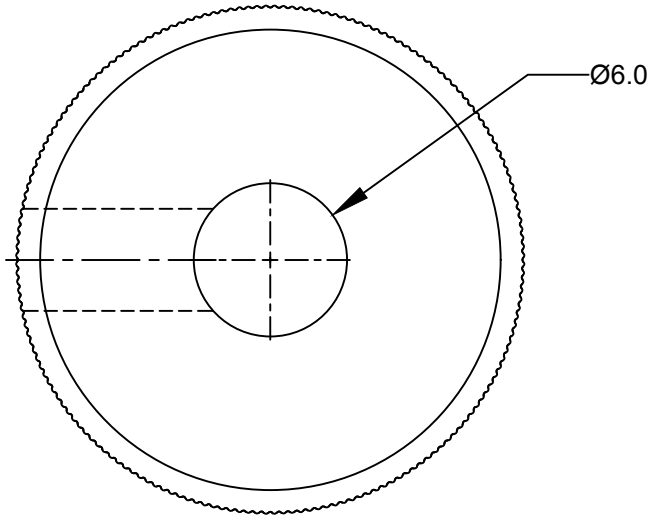

(All Dimensions in mm)

Material Thickness: 1.6mm