ASMT-UWB1-Zxxxx

OneWhite Surface Mount PLCC-2 LED Indicator

Data Sheet

Lead (Pb) Free RoHS 6 fully compliant



Description

This family of SMT LEDs is packaged in the industry standard PLCC-2 package. These SMT LEDs have high reliability performance and are designed to work under a wide range of environmental conditions. This high reliability feature makes them ideally suited to be used as interior signs application conditions.

These LEDs are compatible with reflow soldering process.

The wide viewing angle at 120° makes these LEDs ideally suited for panel, push button, offi ce equipment, industrial equipment, and home appliances. The fl at top emitting surface makes it easy for these LEDs to mate with light pipes. With the built-in refl ector pushing up the intensity of the light output, these LEDs are also suitable to be used as LED pixels in interior electronic signs.

Features

- High reliability package with silicone encapsulation
- Compatible with refl ow soldering process
- High optical effi ciency with 100 lm/W
- Available in 8 mm carrier tape with reel diameter 180mm
- JEDEC MSL 3 product
- ESD threshold of 1000 V (HBM model) per Jedec

Applications

- Non-automotive use
- General Signage backlighting
- Amusement machine backlighting
- Industrial lighting
- Light strips

CAUTION: ASMT-UWB1-Zxxxx LEDs are Class 1C ESD sensitive. Please observe appropriate precautions during handling and processing. Refer to Avago Application Note AN-1142 for additional details.

Package Dimensions

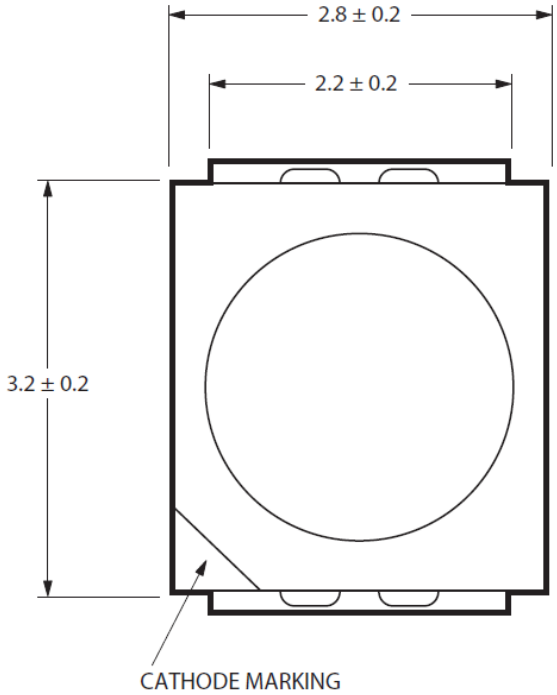

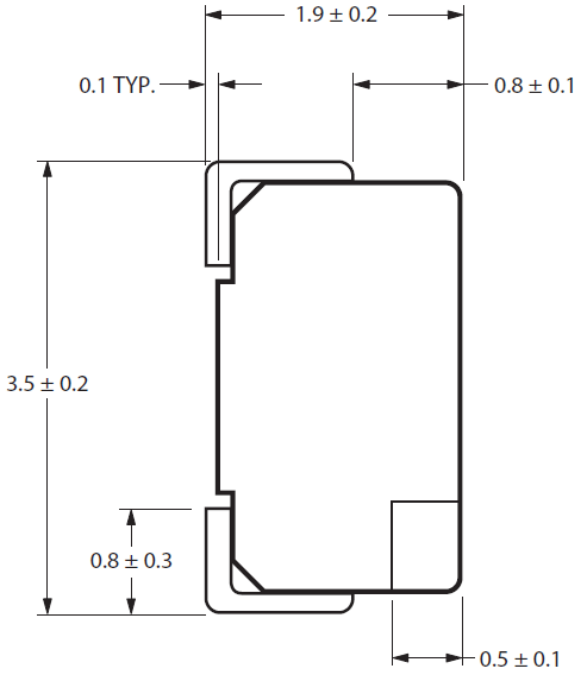

Notes:

1. All dimensions in millimeters.
2. Terminal finish = Ag plating.

Device Selection Guide

Color	Part Number	CCT (K)	Luminous Intensity (mcd) [1,2] Min	Max	Test Current (mA)	Chip
White	ASMT-UWB1-ZX302	4500 ~ 8000	1800.00	3550.00	20	InGaN
White	ASMT-UWB1-ZX312	2700 ~ 4000	1800.00	3550.00	20	InGaN
White	ASMT-UWB1-ZX3A2	8000	1800.00	3550.00	20	InGaN
White	ASMT-UWB1-ZX3B2	6500	1800.00	3550.00	20	InGaN
White	ASMT-UWB1-ZX3C2	5700	1800.00	3550.00	20	InGaN
White	ASMT-UWB1-ZX3D2	5000	1800.00	3550.00	20	InGaN
White	ASMT-UWB1-ZX3E2	4500	1800.00	3550.00	20	InGaN
White	ASMT-UWB1-ZX3F2	4000	1800.00	3550.00	20	InGaN
White	ASMT-UWB1-ZX3G2	3500	1800.00	3550.00	20	InGaN
White	ASMT-UWB1-ZX3H2	3000	1800.00	3550.00	20	InGaN
White	ASMT-UWB1-ZX3J2	2700	1800.00	3550.00	20	InGaN
White	ASMT-UWB1-ZAAB2	6500	2000.00	2500.00	20	InGaN
White	ASMT-UWB1-ZAAC2	5700	2000.00	2500.00	20	InGaN
White	ASMT-UWB1-ZAAD2	5000	2000.00	2500.00	20	InGaN
White	ASMT-UWB1-ZAAF2	4000	2000.00	2500.00	20	InGaN
White	ASMT-UWB1-ZAAH2	3000	2000.00	2500.00	20	InGaN
White	ASMT-UWB1-ZX702	4500 ~ 8000	2240.00	4500.00	20	InGaN
White	ASMT-UWB1-ZX7A2	8000	2240.00	4500.00	20	InGaN
White	ASMT-UWB1-ZX7B2	6500	2240.00	4500.00	20	InGaN
White	ASMT-UWB1-ZX7C2	5700	2240.00	4500.00	20	InGaN
White	ASMT-UWB1-ZX7D2	5000	2240.00	4500.00	20	InGaN
White	ASMT-UWB1-ZX7E2	4500	2240.00	4500.00	20	InGaN

Notes:

1. The luminous intensity IV, is measured at the mechanical axis of the lamp package. The actual peak of the spatial radiation pattern may not be aligned with this axis.
2. IV Tolerance = ±12%

Part Numbering System

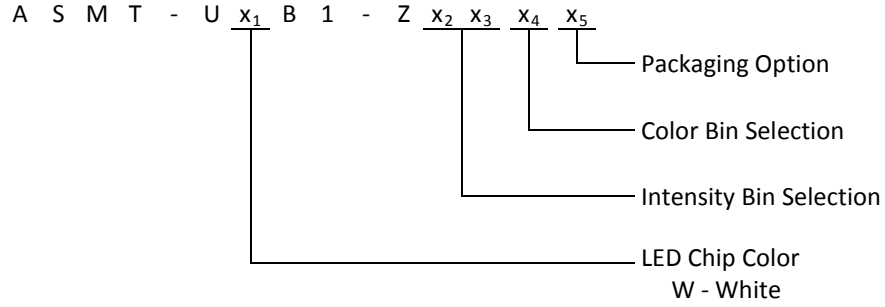

Table 2. Absolute Maximum Ratings (T_A = 25 °C)

Parameters	Rating
DC Forward Current [1]	30mA
Peak Forward Current [2]	100mA
Power Dissipation	108 mW
Junction Temperature	110 °C
Operating Temperature	- 40 °C to + 85°C
Storage Temperature	- 40 °C to + 100 °C

Notes:
1. Derate linearly as shown in derating curve.
2. Duty Factor = 10%, Frequency = 1kHz. ommended.

Table 3. Optical Characteristics (T_A = 25 °C)

			Typ. Chromaticity Coordinates (1)		Viewing Angle $2\theta_{½}$ [2] (Degrees)	Luminous Efficiency η_e (lm/W)	Total Flux / Luminous Intensity θ_V(lm) / Iv(cd)	CRI
Color	**Part Number**	**Dice Technology**	**X**	**y**	Typ.	Typ.	Typ.	**Min.**
White	ASMT-UWB1-Z	InGaN	0.33	0.34	120	100	2.7	70

Notes:
1. The chromaticity coordinates are derived from the CIE 1931 Chromaticity Diagram and represent the perceived color of the device
2. $\theta_{½}$ is the off-axis angle where the luminous intensity is ½ the peak intensity.

Table 4. Electrical Characteristics (T_A = 25 °C)

		Forward Voltage V_F (Volts) @ I_F = 20mA		Reverse Voltage V_R (1) @ 10µA	Thermal Resistance
Color	**Part Number**	**Min.**	**Max.**	**Min.**	**$R\theta_{J-P}$ (°C/W)**
White	ASMT-UWB1-Z	2.8	3.6	5	150

Note:
1. Reverse Voltage indicates product fi nal test condition. Long term reverse bias is not recommended.

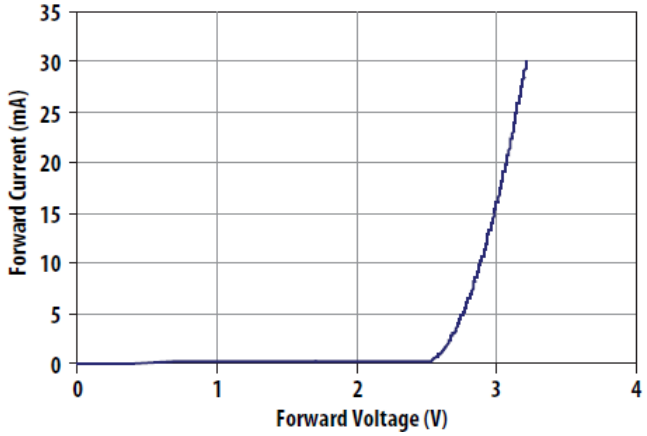

Figure 1. Forward Current Vs. Forward Voltage

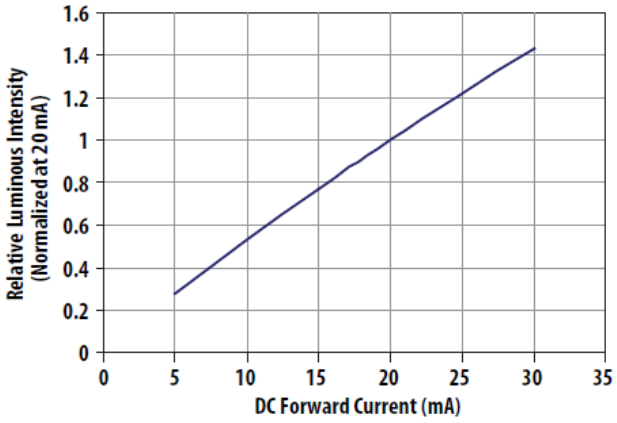

Figure 2. Relative Intensity Vs. Forward Current

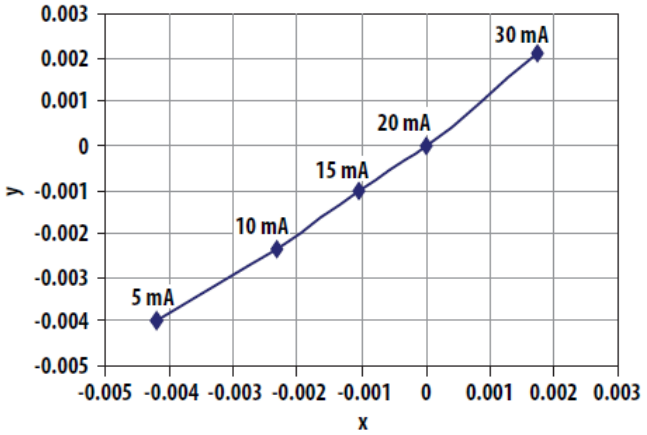

Figure 3. Chromaticity shift vs. current

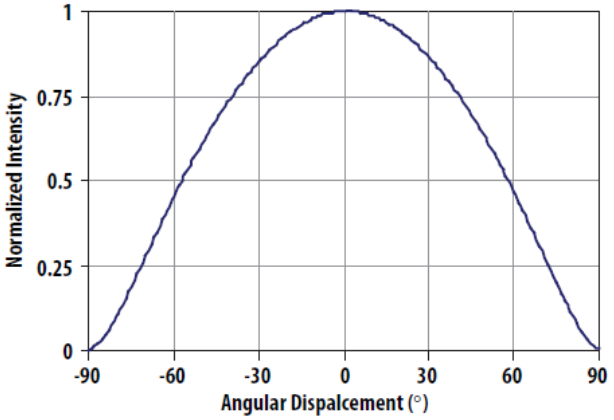

Figure 4. Radiation pattern

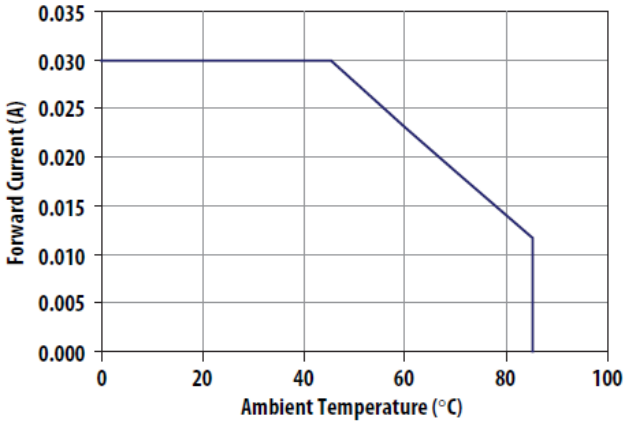

Figure 5. Maximum forward current vs. ambient temperature. Derated based on Tjmax 110° C, Rthja 600°C/W

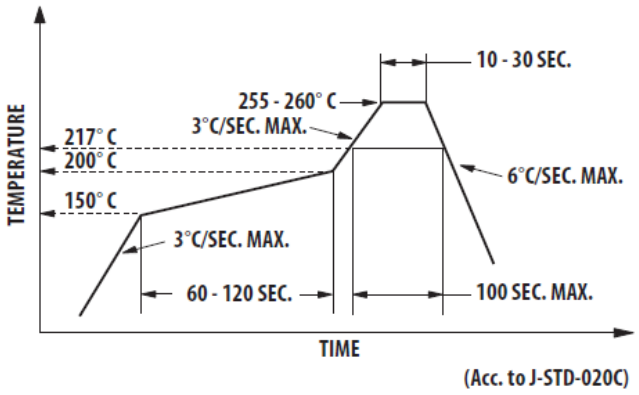

Figure 6. Recommended Pb-free refl ow soldering profi le

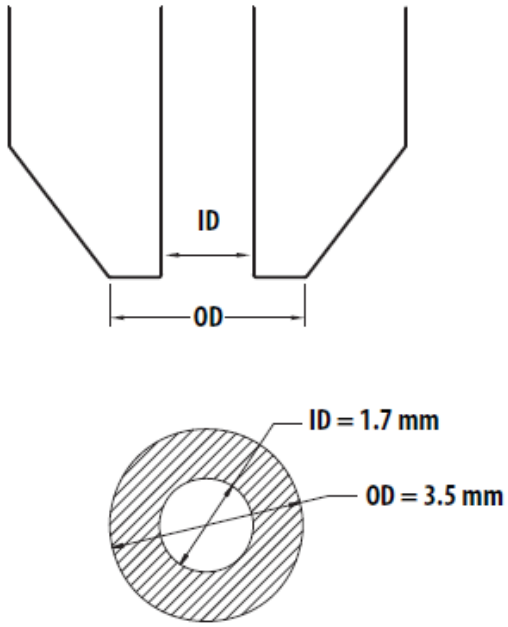

Figure 7. Recommended Pick and Place Nozzle Size

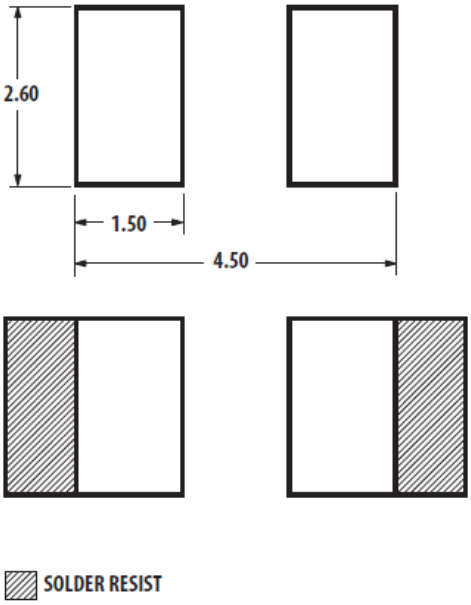

Figure 8. Recommended Soldering Pad Pattern

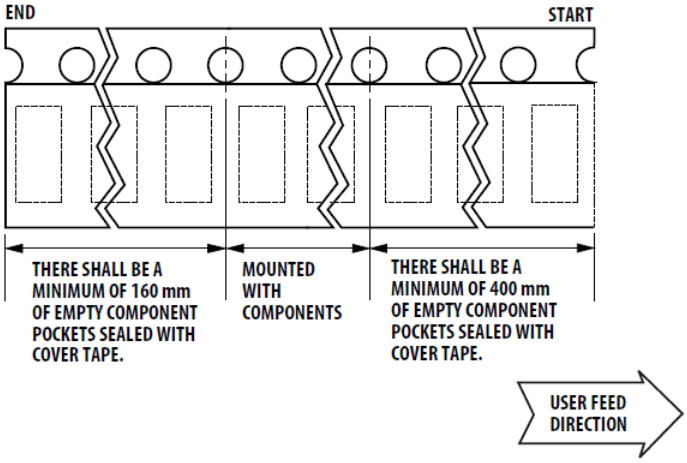

Figure 9. Tape Leader and Trailer Dimensions

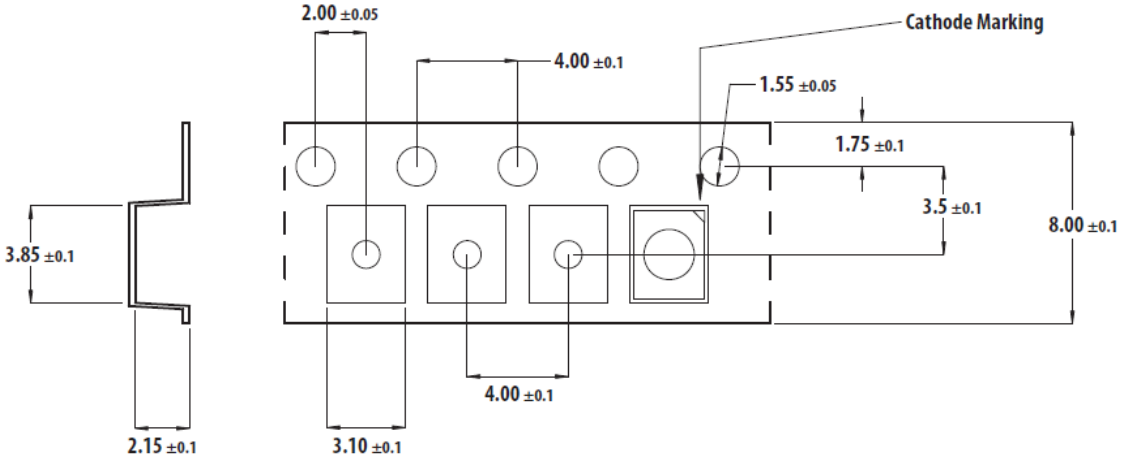

Figure 10. Tape Dimensions (Unit: mm)

Intensity Bin Select (X_2X_3)

Color Bin Select (X_4)

Individual reel will contain parts from one half bin only

X_2	Min I_V Bin

X_3	
0	Full Distribution
3	3 half bins starting from $X_2$1
4	4 half bins starting from $X_2$1
5	2 half bins starting from $X_2$1
B	1 half bins starting from $X_2$2
6	2 half bins starting from $X_2$2
7	3 half bins starting from $X_2$2
8	4 half bins starting from $X_2$2
9	2 half bins starting from $X_2$2

Intensity Bin Limits

Bin ID	Min. (mcd)	Max. (mcd)
X1	1800.00	2240.00
X2	2240.00	2850.00
Y1	2850.00	3550.00
Y2	3550.00	4500.00
Z1	4500.00	5600.00
Z2	5600.00	7150.00
AA	2000.00	2500.00

Tolerance of each bin limit = ± 12%

Individual reel will contain parts from one full bin only.

X_4	
BIn	**Color Bin ID**
A	1A, 1B, 1C, 1D
B	2A, 2B, 2C, 2D
C	3A, 3B, 3C, 3D
D	4A, 4B, 4C, 4D
E	5A, 5B, 5C, 5D
F	6A, 6B, 6C, 6D
G	7A, 7B, 7C, 7D
H	8A, 8B, 8C, 8D
J	9A, 9B, 9C, 9D
K	1A, 1B, 1C, 1D, 2A, 2B, 2C, 2D,
L	2A, 2B, 2C, 2D, 3A, 3B, 3C, 3D
M	3A, 3B, 3C, 3D, 4A, 4B, 4C, 4D
N	4A, 4B, 4C, 4D, 5A, 5B, 5C, 5D
Q	6A, 6B, 6C, 6D, 7A, 7B, 7C, 7D
R	7A, 7B, 7C, 7D, 8A, 8B, 8C, 8D
S	8A, 8B, 8C, 8D, 9A, 9B, 9C, 9D
0	1A, 1B, 1C, 1D, 2A, 2B, 2C, 2D, 3A, 3B, 3C, 3D, 4A, 4B, 4C, 4D, 5A, 5B, 5C, 5D
1	6A, 6B, 6C, 6D, 7A, 7B, 7C, 7D, 8A, 8B, 8C, 8D, 9A, 9B, 9C, 9D

Colro Bin ID Limits

Color Bin ID	Chromaticity Coordinates Limits				
1A	x	0.2950	0.2920	0.2984	0.3009
	y	0.2970	0.3060	0.3133	0.3042
1B	x	0.2920	0.2895	0.2962	0.2984
	y	0.3060	0.3135	0.3220	0.3133
1C	x	0.2984	0.2962	0.3028	0.3048
	y	0.3133	0.3220	0.3304	0.3207
1D	x	0.2984	0.3048	0.3068	0.3009
	y	0.3133	0.3207	0.3113	0.3042
2A	x	0.3048	0.3130	0.3144	0.3068
	y	0.3207	0.3290	0.3186	0.3113
2B	x	0.3028	0.3115	0.3130	0.3048
	y	0.3304	0.3391	0.3290	0.3207
2C	x	0.3115	0.3205	0.3213	0.3130
	y	0.3391	0.3481	0.3373	0.3290
2D	x	0.3130	0.3213	0.3221	0.3144
	y	0.3290	0.3373	0.3261	0.3186
3A	x	0.3215	0.3290	0.3290	0.3222
	y	0.3350	0.3417	0.3300	0.3243
3B	x	0.3207	0.3290	0.3290	0.3215
	y	0.3462	0.3538	0.3417	0.3350
3C	x	0.3290	0.3376	0.3371	0.3290
	y	0.3538	0.3616	0.3490	0.3417
3D	x	0.3290	0.3371	0.3366	0.3290
	y	0.3417	0.3490	0.3369	0.3300
4A	x	0.3371	0.3451	0.3440	0.3366
	y	0.3490	0.3554	0.3427	0.3369
4B	x	0.3376	0.3463	0.3451	0.3371
	y	0.3616	0.3687	0.3554	0.349
4C	x	0.3463	0.3551	0.3533	0.3451
	y	0.3687	0.3760	0.3620	0.3554
4D	x	0.3451	0.3533	0.3515	0.3440
	y	0.3554	0.3620	0.3487	0.3427
5A	x	0.3530	0.3615	0.3590	0.3512
	y	0.3597	0.3659	0.3521	0.3465
5B	x	0.3548	0.3641	0.3615	0.3530
	y	0.3736	0.3804	0.3659	0.3597
5C	x	0.3641	0.3736	0.3702	0.3615
	y	0.3804	0.3874	0.3722	0.3659
5D	x	0.3615	0.3702	0.3670	0.3590
	y	0.3659	0.3722	0.3578	0.3521

Tolerance of each bin limit = ±0.01

Color Bin ID	Chromaticity Coordinates Limits				
6A	x	0.3670	0.3702	0.3825	0.3783
	y	0.3578	0.3722	0.3798	0.3646
6B	x	0.3702	0.3736	0.3869	0.3825
	y	0.3722	0.3874	0.3958	0.3798
6C	x	0.3825	0.3869	0.4006	0.3950
	y	0.3798	0.3958	0.4044	0.3875
6D	x	0.3783	0.3825	0.3950	0.3898
	y	0.3646	0.3798	0.3875	0.3716
7A	x	0.3889	0.3941	0.4080	0.4017
	y	0.3690	0.3848	0.3916	0.3751
7B	x	0.3941	0.3996	0.4146	0.4080
	y	0.3848	0.4015	0.4089	0.3916
7C	x	0.4080	0.4146	0.4299	0.4221
	y	0.3916	0.4089	0.4165	0.3984
7D	x	0.4017	0.4080	0.4221	0.4147
	y	0.3751	0.3916	0.3984	0.3814
8A	x	0.4147	0.4221	0.4342	0.4259
	y	0.3814	0.3984	0.4028	0.3853
8B	x	0.4221	0.4299	0.443	0.4342
	y	0.3984	0.4165	0.4212	0.4028
8C	x	0.4342	0.4430	0.4562	0.4465
	y	0.4028	0.4212	0.426	0.4071
8D	x	0.4259	0.4342	0.4465	0.4373
	y	0.3853	0.4028	0.4071	0.3893
9A	x	0.4373	0.4465	0.4582	0.4483
	y	0.3893	0.4071	0.4099	0.3919
9B	x	0.4465	0.4562	0.4687	0.4582
	y	0.4071	0.4260	0.4289	0.4099
9C	x	0.4582	0.4687	0.4813	0.4700
	y	0.4099	0.4289	0.4319	0.4126
9D	x	0.4483	0.4582	0.4700	0.4593
	y	0.3919	0.4099	0.4126	0.3944

Tolerance of each bin limit = ±0.01

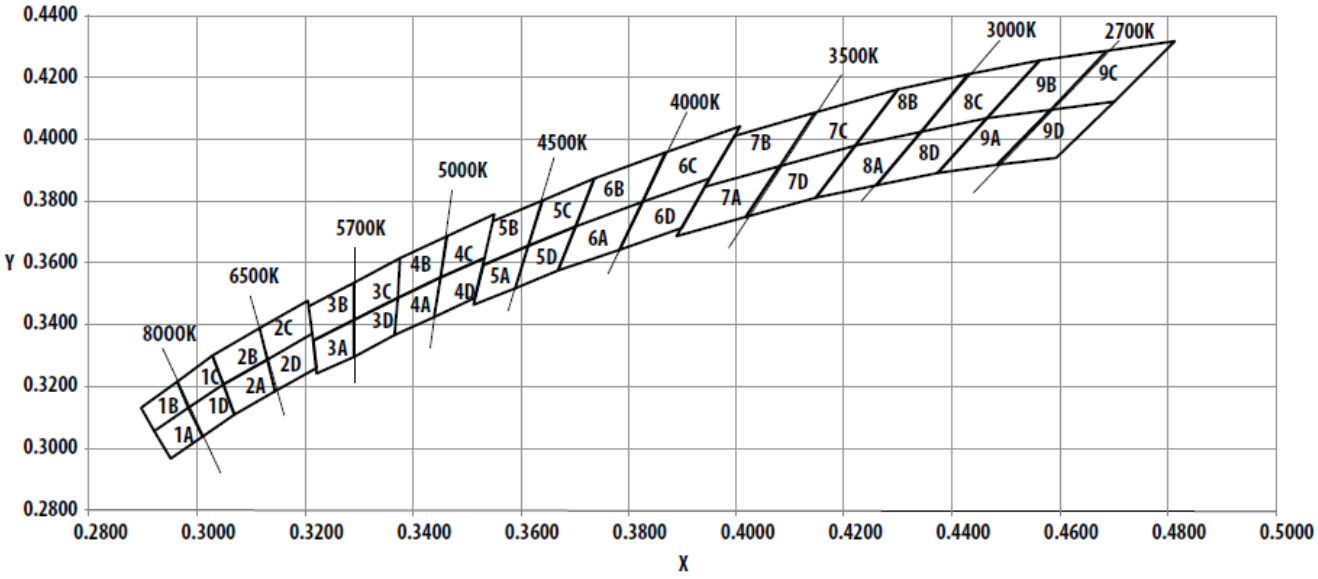

Figure 11. Color Bins

Packaging Option (X5)

Option	Test Current	Package Type	Reel Size
2	20mA	Top Mount	7 Inch

Forward Voltage Bin

Bin ID	Min	Max
F05	2.8	3.0
F06	3.0	3.2
F07	3.2	3.4
F08	3.4	3.6

Tolerance of each bin limit = ±0.1 V

DISCLAIMER: Avago's products and software are not specifically designed, manufactured or authorized for sale as parts, components or assemblies for the planning, construction, maintenance or direct operation of a nuclear facility or for use in medical devices or applications. Customer is solely responsible, and waives all rights to make claims against avago or its suppliers, for all loss, damage, expense or liability in connection with such use.

For product information and a complete list of distributors, please go to our web site:
www.avagotech.com

Avago, Avago Technologies, and the A logo are trademarks of Avago Technologies in the United States and other countries.
Data subject to change. Copyright © 2005-2011 Avago Technologies. All rights reserved.
April 23, 2013