⑥ **USB2.0 COMPLIANT**

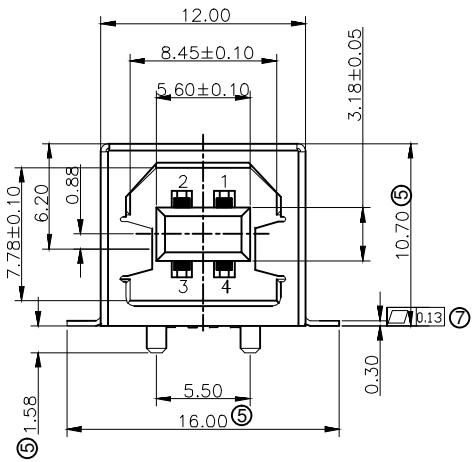

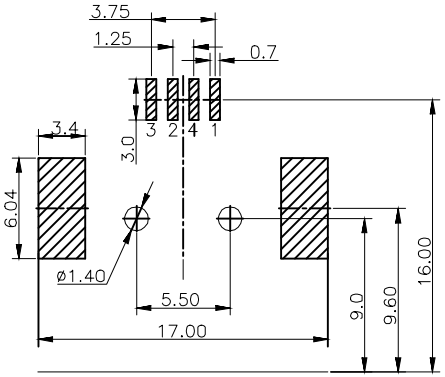

RECOMMENDED P.C.B LAYOUT
(TOLERANCE:±0.05)

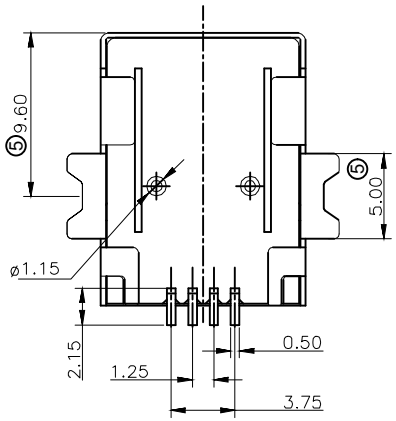

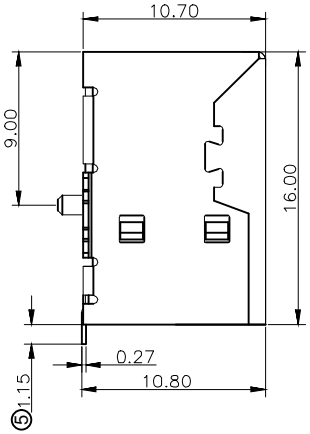

NOTES:

1.Material:
⑬⑧ 1.1 Housing: LCP UL94V-0, White Color
1.2 Shell: Brass
1.3 Contact :Phosphor Bronze
2. FINISH:
2.1 Contact Area: Gold Flash
Solder Area:Tin Plated
Under: Ni Plated
⑦ 2.2 Shell: Ni Plated 50u"~80 u"
3.MECHANICAL:
3.1 Mating Force:3.57kgf Max.
3.2 Unmating Force:1.02kgf Min
3.3 Durability:1500 cycles Min
4.ELECTRICAL:
4.1 Current Rating:1.5A
⑫ 4.2 Voltage Rating: 30VAC
4.3 Dielectric Strength:500V AC FOR 1 MINUTE
4.4 Contact Resistance:30mΩ Max
4.5 Insulation Resistance:1000 MΩ Min
5.Operating temperature: -55°C TO +85°C
⑫ 6.Soldering temperature: 255±5°C for 3~5S
7.PACKIING:
A-USB B/SMT:Tray
A-USB B/SMT-R:Tape&Reel

RoHS compliant
Unit: mm

Scale	Free
TOLERANCE	
X.X	±0.5
X.XX	±0.3
X.XXX	±0.2
DIM	TOL
ANG.°	±5°
Angle	TOL

Id.	Modification	Date	Name
⑭	Add page 4 for tray packaging	26.03.2025	Luca
⑬	Update housing material	18.11.2021	Luca
⑫	Update	30.10.2019	Carson
⑪	Add reflow solder profile	12.12.2018	Xavier
⑩	Add the dimension of reel	12.12.2016	Winnie
⑨	Add page 2	08.09.2016	Jesse

	Date	Name
Drawn	27.03.2007	Hellwig
Approved	26.03.2025	Luca

ASSMANN WSW components

Customer-No.

ASSMANN WSW-No. A-USB B/SMT
A-USB B/SMT-R

Drawing-No. ASS 1122 CO rev14

Replace

SHEET 1/4

⑨

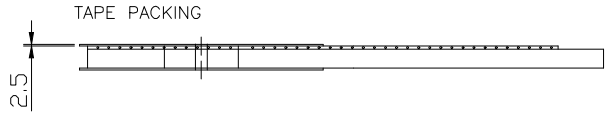

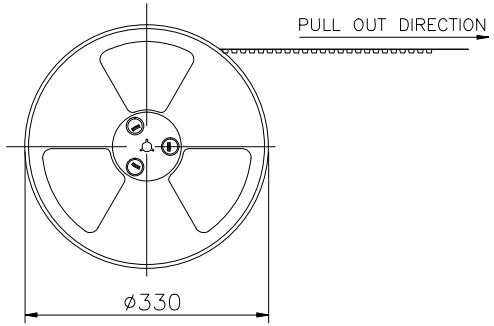

(SC 1:20)

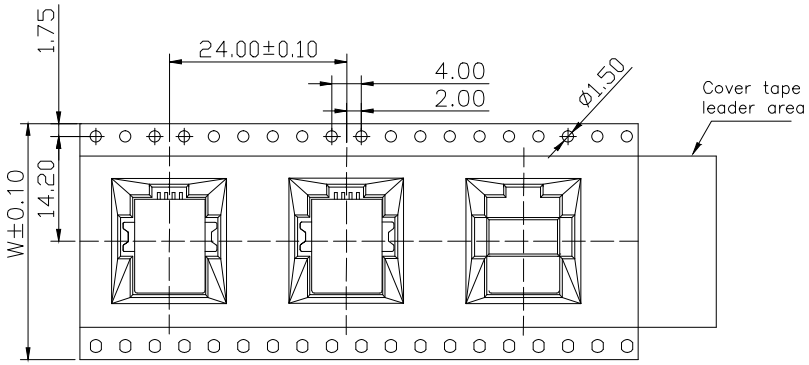

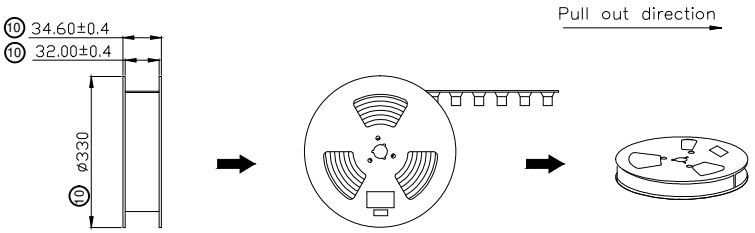

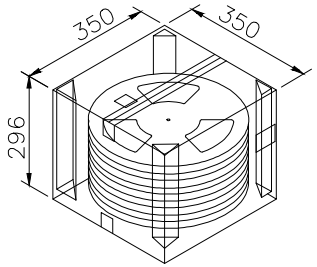

Pin.	W	Pcs/R	R/Carton	Pcs/Carton
04	32	150	7	1050

NOTES:

1. Material: White
2. Thickness: 0.50±0.05mm
3. Component load per 13" reel: 150pcs
4. Carton Size: 350*296(mm)

RoHS compliant
Unit: mm

Scale	Free
TOLERANCE	
X.X	±0.5
X.XX	±0.3
X.XXX	±0.2
DIM	TOL
ANG.°	±5°
Angle	TOL

Id.	Modification	Date	Name
⑭	Add page 4 for tray packaging	26.03.2025	Luca
⑬	Update housing material	18.11.2021	Luca
⑫	Update	30.10.2019	Carson
⑪	Add reflow solder profile	12.12.2018	Xavier
⑩	Add the dimension of reel	12.12.2016	Winnie
⑨	Add page 2	08.09.2016	Jesse

	Date	Name
Drawn	27.03.2007	Hellwig
Approved	26.03.2025	Luca

ASSMANN WSW components

Customer-No.

ASSMANN WSW-No. A-USB B/SMT
A-USB B/SMT-R

Drawing-No. ASS 1122 CO rev14

Replace

SHEET 2/4

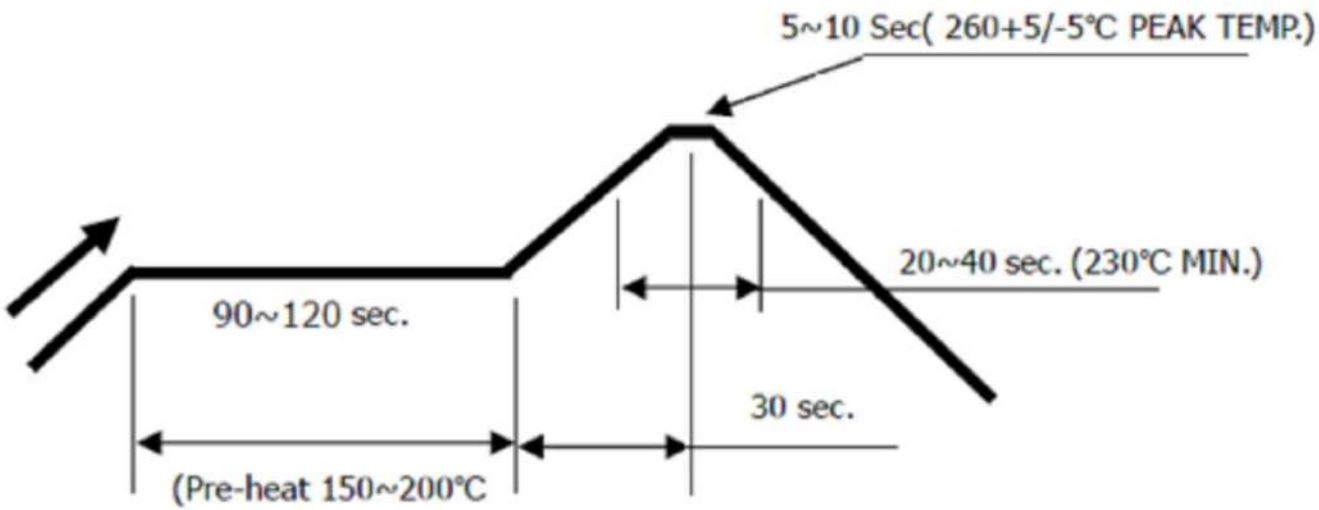

TEMPERATURE CONDITION GRAPH
(TEMPERATURE ON BOARD PATTERN SIDE)

RoHS compliant
Unit: mm

Scale	Free
TOLERANCE	
X.X	±0.5
X.XX	±0.3
X.XXX	±0.2
DIM	TOL
ANG.°	±5°
Angle	TOL

Id.	Modification	Date	Name
14	Add page 4 for tray packaging	26.03.2025	Luca
13	Update housing material	18.11.2021	Luca
12	Update	30.10.2019	Carson
11	Add reflow solder profile	12.12.2018	Xavier
10	Add the dimension of reel	12.12.2016	Winnie
9	Add page 2	08.09.2016	Jesse

	Date	Name
Drawn	27.03.2007	Hellwig
Approved	26.03.2025	Luca

ASSMANN WSW components

Customer-No.

ASSMANN WSW-No. A-USB B/SMT
A-USB B/SMT-R

Drawing-No. ASS 1122 CO rev14

Replace

SHEET 3/4

⑭

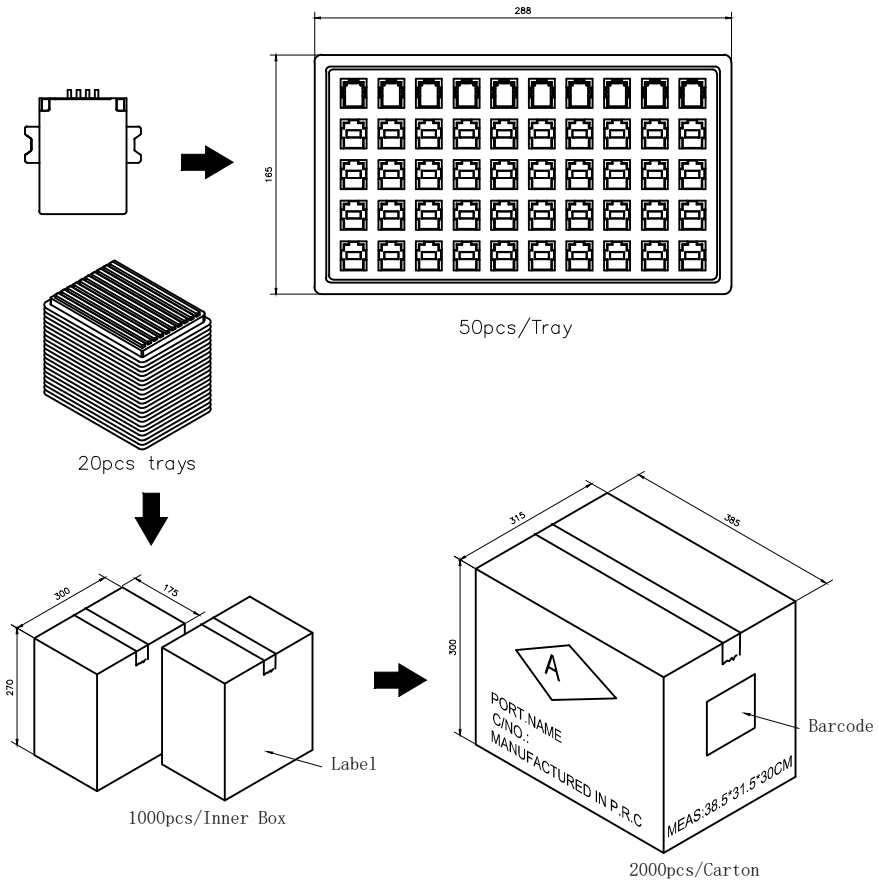

RoHS compliant
Unit: mm

Scale	Free
TOLERANCE	
X.X	±0.5
X.XX	±0.3
X.XXX	±0.2
DIM	TOL
ANG.°	±5°
Angle	TOL

Id.	Modification	Date	Name
⑭	Add page 4 for tray packaging	26.03.2025	Luca
⑬	Update housing material	18.11.2021	Luca
⑫	Update	30.10.2019	Carson
⑪	Add reflow solder profile	12.12.2018	Xavier
⑩	Add the dimension of reel	12.12.2016	Winnie
⑨	Add page 2	08.09.2016	Jesse

	Date	Name
Drawn	27.03.2007	Hellwig
Approved	26.03.2025	Luca

ASSMANN WSW components

Customer-No.

ASSMANN WSW-No. A-USB B/SMT
A-USB B/SMT-R

Drawing-No. ASS 1122 CO rev14

Replace

SHEET 4/4