09Pin

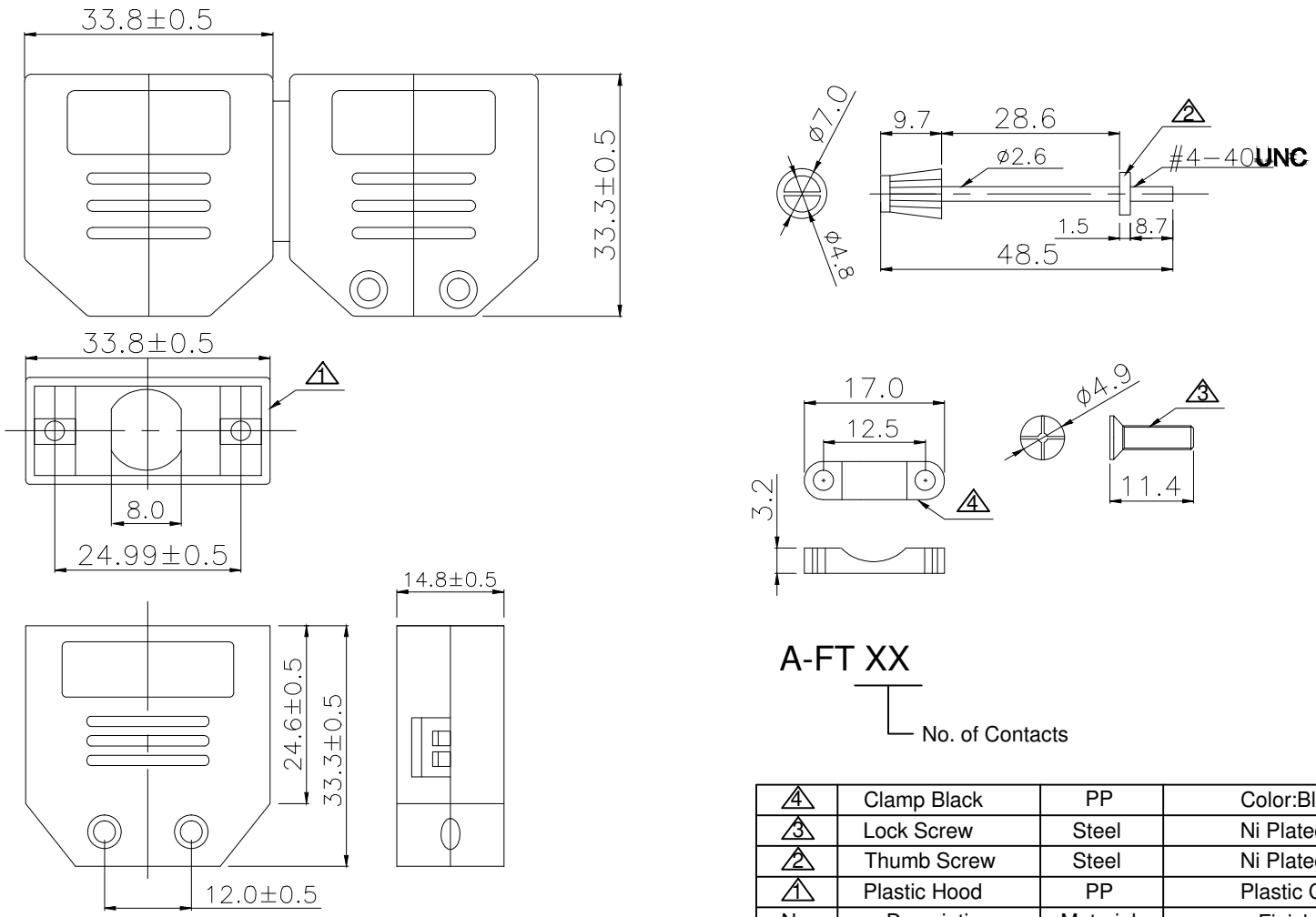

A-FT XX

No. of Contacts

No.	Description	Material	Finish/Remark	Q'ty
4	Clamp Black	PP	Color:Black	1
3	Lock Screw	Steel	Ni Plated,Color:Black	2
2	Thumb Screw	Steel	Ni Plated,Color:Black	2
1	Plastic Hood	PP	Plastic Color:Black	1

RoHS compliant

Scale	1:1
TOLERANCE	
X.X	±0.25
X.XX	±0.15
X.XXX	±0.10
DIM	TOL
X.°	±x°
X.X°	±x°
Angle	TOL

Id.	Modification	Date	Name
2	UPDATE	30.07.2018	Xavier
1	Drawn	10.12.2008	Dean

	Date	Name
Drawn	10.12.2008	Dean
Approved	30.07.2018	Winnie

ASSMANN WSW components

Customer-No.

ASSAMNN WSW-No.
A-FT XX

Drawing-No.
ASS 3205 CO

rev02

Replace

Sheet 1/5

15Pin

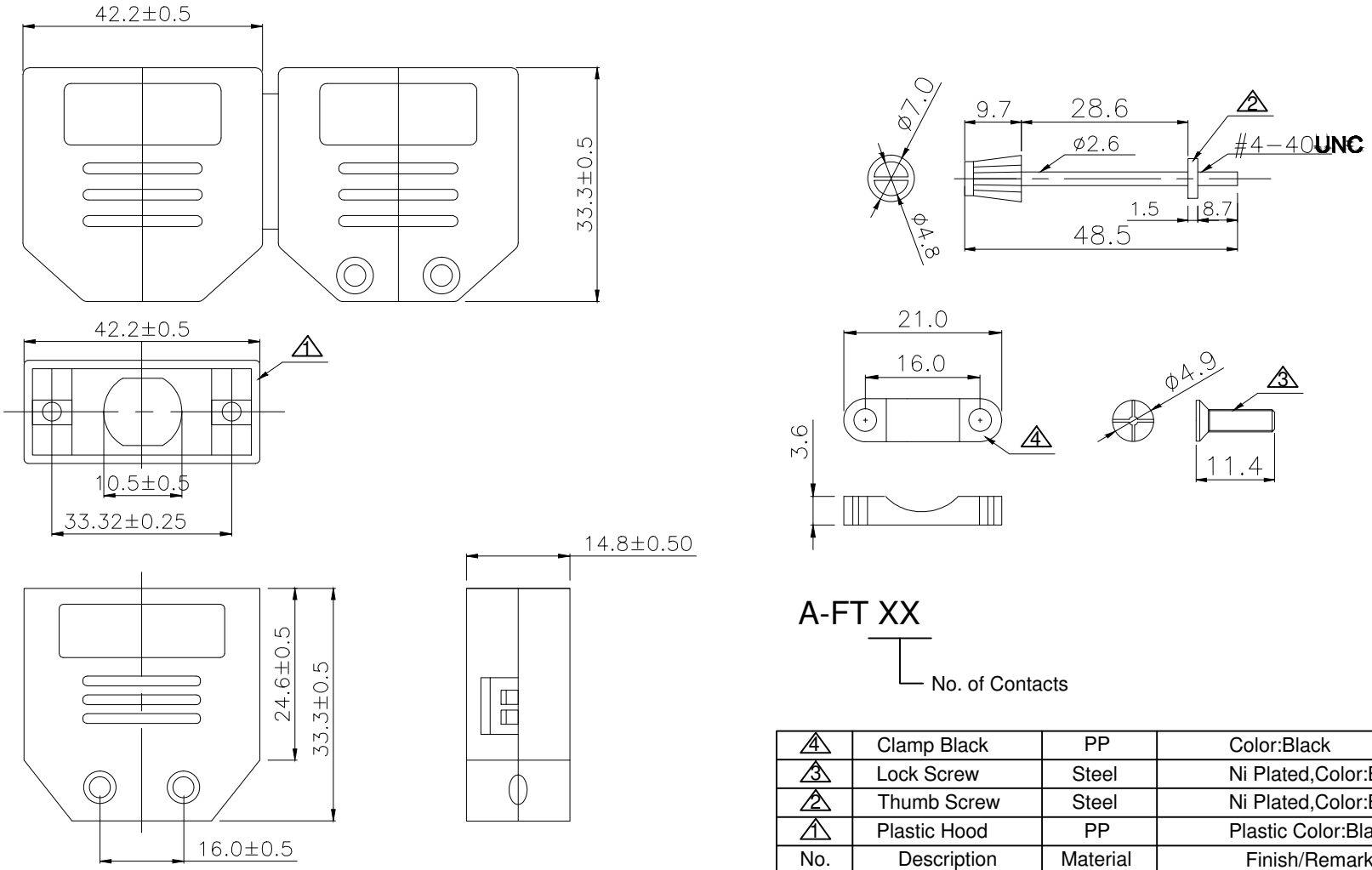

A-FT XX

No. of Contacts

No.	Description	Material	Finish/Remark	Q'ty
4	Clamp Black	PP	Color:Black	1
3	Lock Screw	Steel	Ni Plated,Color:Black	2
2	Thumb Screw	Steel	Ni Plated,Color:Black	2
1	Plastic Hood	PP	Plastic Color:Black	1

RoHS compliant

Scale	1:1
TOLERANCE	
X.X	±0.25
X.XX	±0.15
X.XXX	±0.10
DIM	TOL
X.°	±x°
X.X°	±x°
Angle	TOL

Id.	Modification	Date	Name
2	UPDATE	30.07.2018	Xavier
1	Drawn	10.12.2008	Dean

	Date	Name
Drawn	10.12.2008	Dean
Approved	30.07.2018	Winnie

ASSMANN WSW components

Customer-No.

ASSAMNN WSW-No.
A-FT XX

Drawing-No.
ASS 3205 CO

rev02

Replace

Sheet 2/5

25Pin

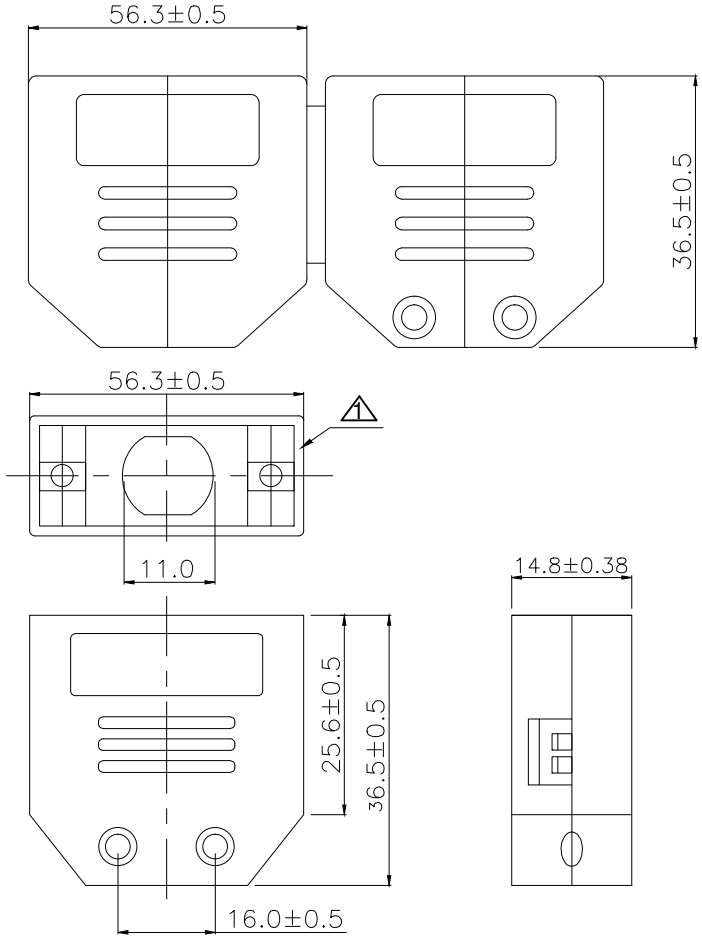

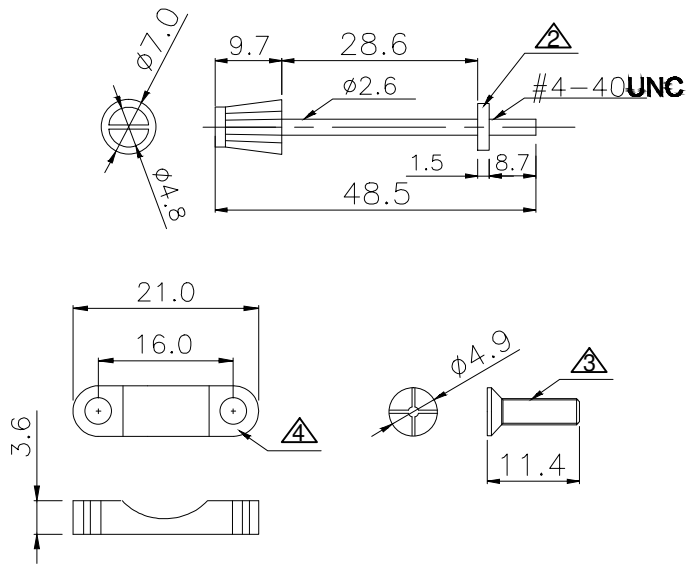

A-FT XX

No. of Contacts

No.	Description	Material	Finish/Remark	Q'ty
4	Clamp Black	PP	Color:Black	1
3	Lock Screw	Steel	Ni Plated,Color:Black	2
2	Thumb Screw	Steel	Ni Plated,Color:Black	2
1	Plastic Hood	PP	Plastic Color:Black	1

RoHS compliant

Scale	1:1
TOLERANCE	
X.X	±0.25
X.XX	±0.15
X.XXX	±0.10
DIM	TOL
X.°	±x°
X.X°	±x°
Angle	TOL

Id.	Modification	Date	Name
2	UPDATE	30.07.2018	Xavier
1	Drawn	10.12.2008	Dean

	Date	Name
Drawn	10.12.2008	Dean
Approved	30.07.2018	Winnie

ASSMANN WSW components

Customer-No.

ASSAMNN WSW-No.
A-FT XX

Drawing-No.
ASS 3205 CO

rev02

Replace

Sheet 3/5

37Pin

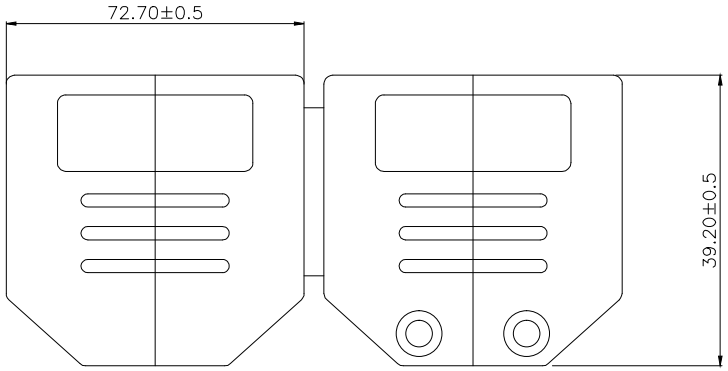

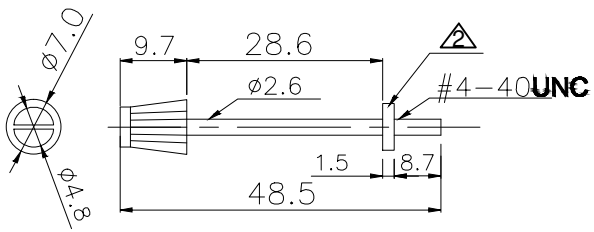

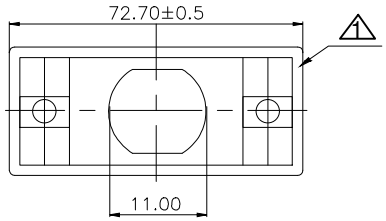

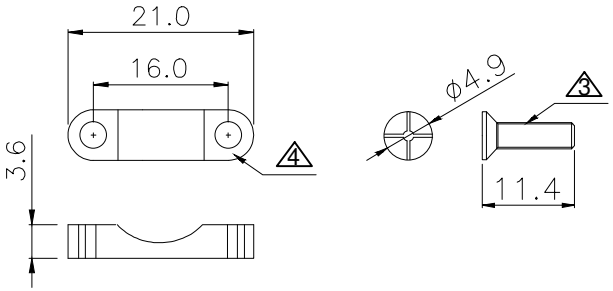

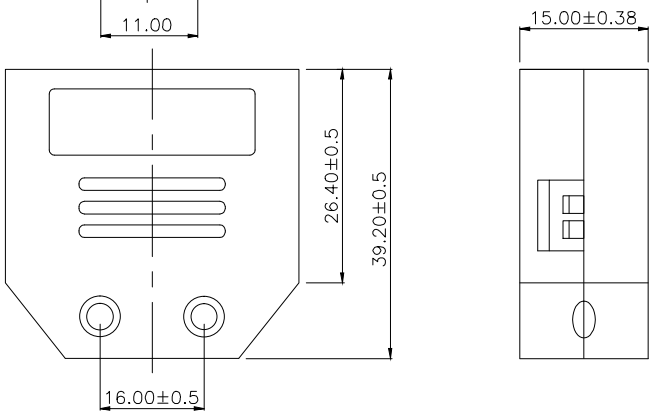

A-FT XX

No. of Contacts

No.	Description	Material	Finish/Remark	Q'ty
4	Clamp Black	PP	Color:Black	1
3	Lock Screw	Steel	Ni Plated,Color:Black	2
2	Thumb Screw	Steel	Ni Plated,Color:Black	2
1	Plastic Hood	PP	Plastic Color:Black	1

RoHS compliant

Scale	1:1
TOLERANCE	
X.X	±0.25
X.XX	±0.15
X.XXX	±0.10
DIM	TOL
X.°	±x°
X.X°	±x°
Angle	TOL

Id.	Modification	Date	Name
2	UPDATE	30.07.2018	Xavier
1	Drawn	10.12.2008	Dean

	Date	Name
Drawn	10.12.2008	Dean
Approved	30.07.2018	Winnie

ASSMANN WSW components

Customer-No.

ASSAMNN WSW-No.
A-FT XX

Drawing-No.
ASS 3205 CO

rev02

Replace

Sheet 4/5

50Pin

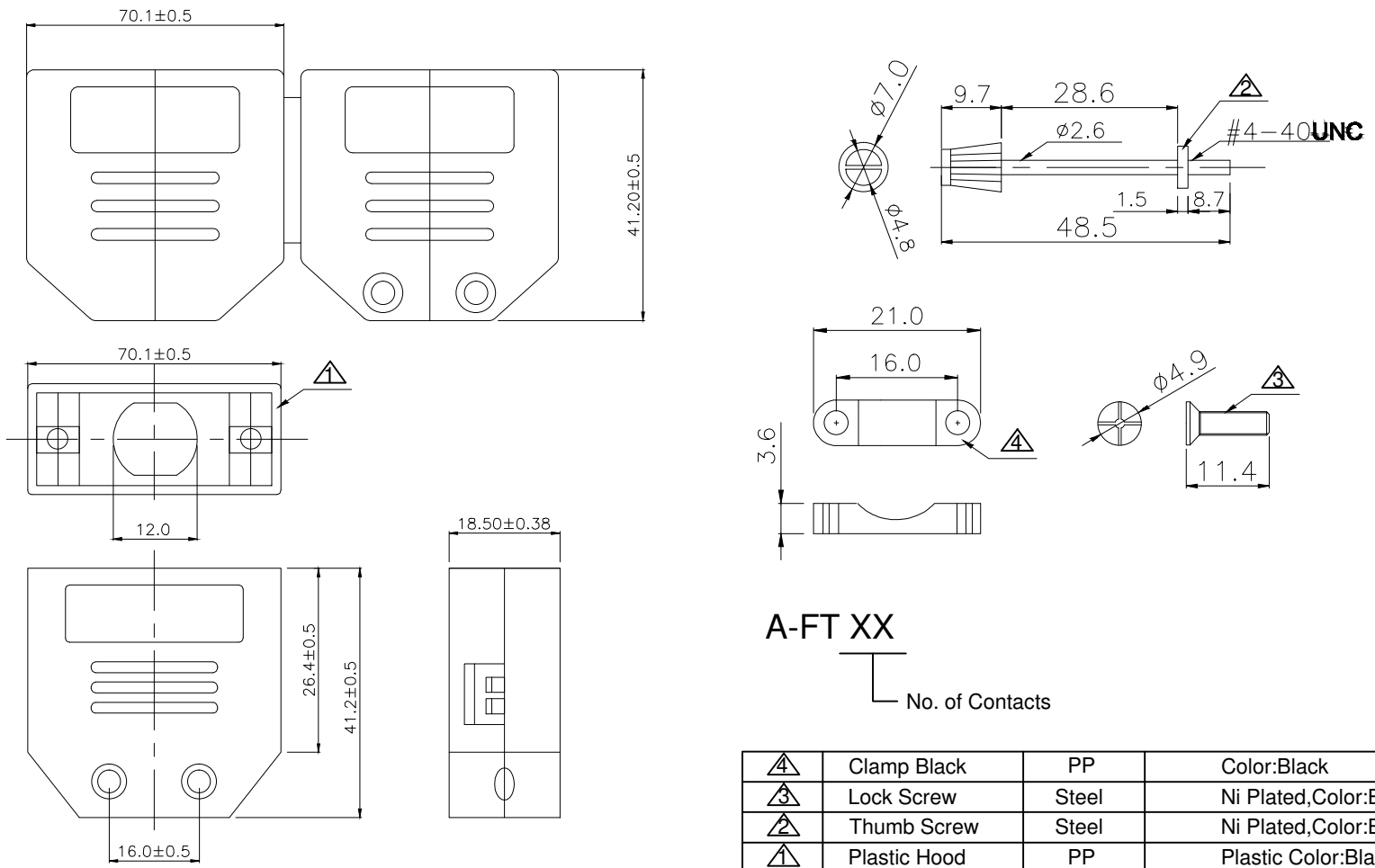

A-FT XX

No. of Contacts

No.	Description	Material	Finish/Remark	Q'ty
4	Clamp Black	PP	Color:Black	1
3	Lock Screw	Steel	Ni Plated,Color:Black	2
2	Thumb Screw	Steel	Ni Plated,Color:Black	2
1	Plastic Hood	PP	Plastic Color:Black	1

RoHS compliant

Scale	1:1
TOLERANCE	
X.X	±0.25
X.XX	±0.15
X.XXX	±0.10
DIM	TOL
X.°	±x°
X.X°	±x°
Angle	TOL

Id.	Modification	Date	Name
2	UPDATE	30.07.2018	Xavier
1	Drawn	10.12.2008	Dean

	Date	Name
Drawn	10.12.2008	Dean
Approved	30.07.2018	Winnie

ASSMANN WSW components

Customer-No.

ASSAMNN WSW-No.
A-FT XX

Drawing-No.
ASS 3205 CO

rev02

Replace

Sheet 5/5