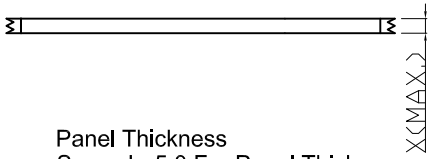

Panel Thickness
Screw L=5.0 For Panel Thickness
Under 1.2mm
Screw L=6.0 For Panel Thickness
Between 1.2-2.0mm

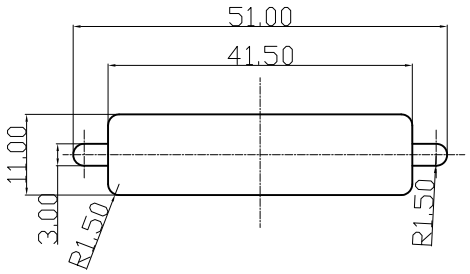

Recommended Panel Cut-Out

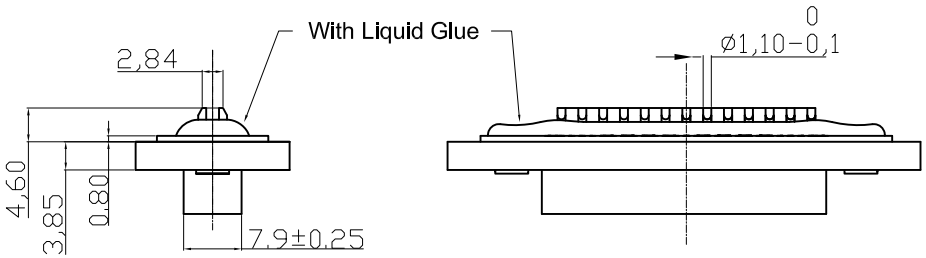

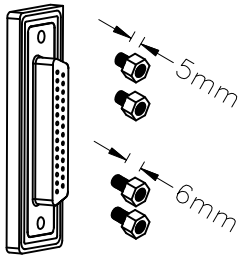

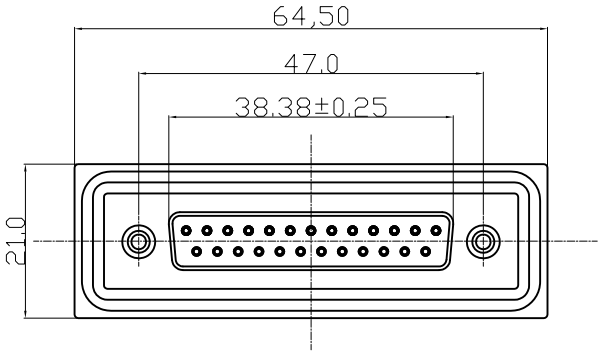

NOTES:

MATERIAL
1.Insulator Material: Black,NYLON+G/F UL 94V-0 ②
2.Contact Material: Copper Alloy
② 3.Plating: 1u" Gold Plating
4.Waterproof Rate: IP67
5.Do Mating Test After Glued
6.Applicable Wire Range:22AWG-26AWG

② Electrical
1.Contact resistance: 20mΩ max.
2.Insulation resistance: 500MΩ min. at DC500V
3.Dielectric withstanding voltage: 500V AC
1 minute
4.Rating current: 2A
5.Durability: 500 cycles
6.Temperature range: -20°C ~ +85°C

RoHS compliant
Unit:mm

Scale	Free						Date	Name
TOLERANCE						Drawn	24.12.2008	JACK
X.X	±0.25					Approved	03.08.2020	Segal
X.XX	±0.10							
X.XXX	±0.05	③	Add the screw spec on page 2	03.08.2020	Segal			
DIM	TOL	②	Add notes	24.01.2018	Segal			
		①	Drawn	24.12.2008	JACK			
Angle	±1°	Id.	Modification	Date	Name			

ASSMANN WSW components

Description: 25 Pin Female Connector

ASSMANN WSW-No.
A-DF 25 LL-WP

Drawing-No.
ASS 3260 CO
rev03

Customer-No.

SHEET
1 / 2

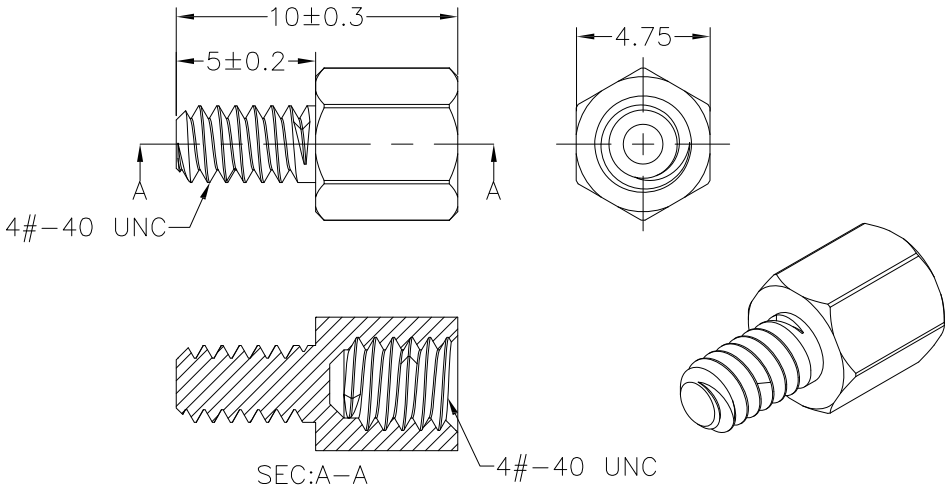

ASCW-000-01EB10

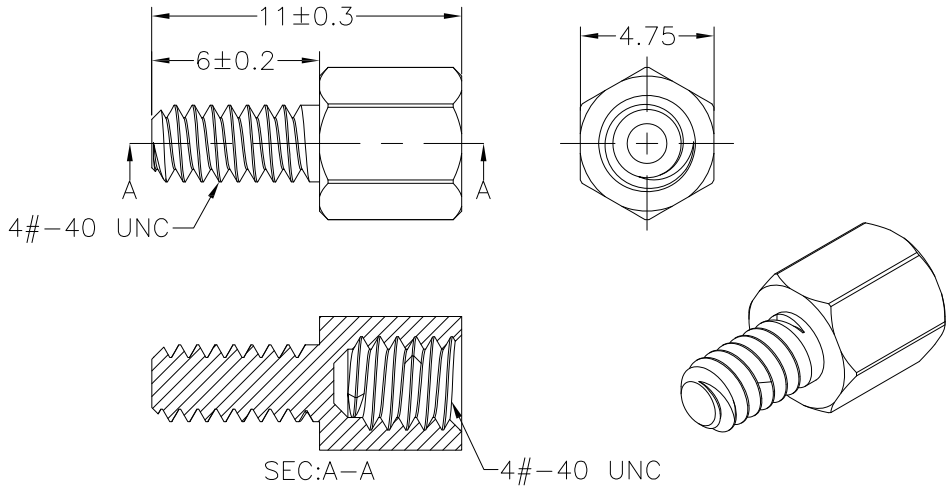

ASCW-000-01EB11

Technical requirements:
1.Material: Brass C3604;
2.Requirements: Bright nickel 100u" Min, salt spray 48H.

RoHS compliant
Unit:mm

Scale	Free
TOLERANCE	
.X	±0.15
.XX	±0.10
DIM	TOL
.X°	±0.5°
X.°	±1.0°
Angle	TOL

Id.	Modification	Date	Name
③	Add the screw spec on page 2	03.08.2020	Segal
②	Add notes	24.01.2018	Segal
①	Drawn	24.12.2008	JACK

	Date	Name
Drawn	24.12.2008	JACK
Approved	03.08.2020	Segal

Description: 25 Pin Female Connector

ASSMANN WSW-No.
A-DF 25 LL-WP

Drawing-No.
ASS 3260 CO

rev03

Customer-No.

SHEET
2 / 2