Male

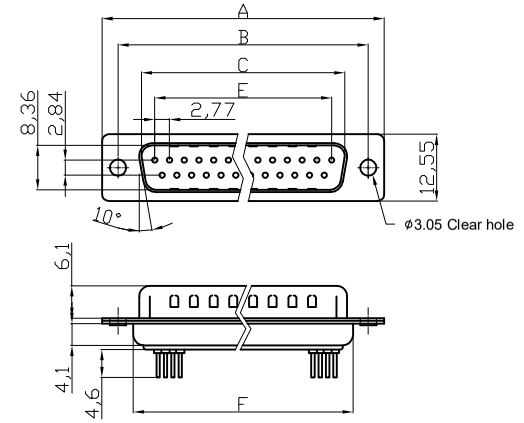

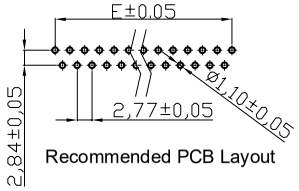

Recommended PCB Layout

NOTES:

MATERIAL
1.Insulator Material:Glass-filled thermoplastic PBT,UL94V-0,Gray
2.Contact Material:Brass or Phosphor Bronze
3.Shell :Steel, 100 µ" Tin Over 50µ" min Copper
4.Clinch Nut :Brass,Nickel Plated
⑤ 5.Contact plating : Gold flash full gold &selective 15u"Au

ELECTRICAL
1.Current Rating : 3AMP
2.Voltage Rating : 250V AC/rms 60Hz
3.Contact Resistance: 20mΩ
4.Insulation Resistance: 1000MΩ min at 500 VDC
5.Withstand Voltage: 1000V AC/rms 60Hz for 1 minute

ENVIRONMENTAL
⑦ 1.Temperature Range:-55°C~+105°C
② UL No. E198287
⑤ Order Code:

A-Dx xx PP/Z-x

Contact style:
F - Female
S - Male

No. of Contacts
09 / 15 / 25 / 37 / 50 ⑥
Standard: Quality class III

Empty: Gold flash (quality class III)
2:Selective 15u"Au on contact area (quality class II)

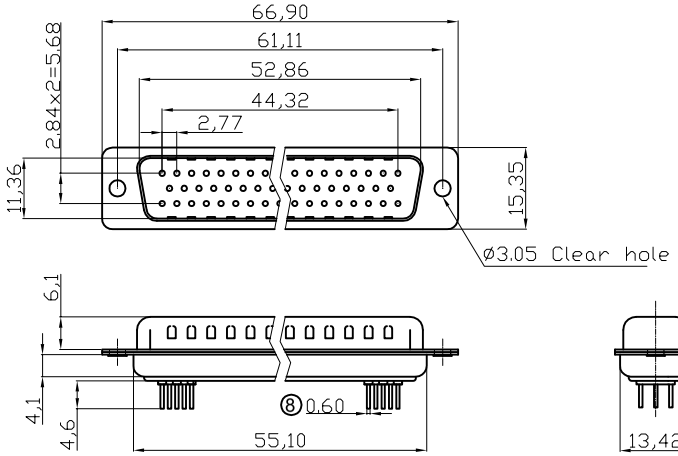

50 Positions

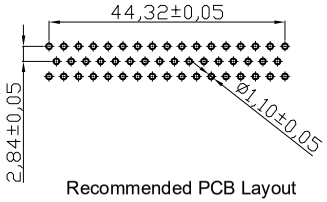

Recommended PCB Layout

Dimensions

	Positions	A	B	C	E	F
	09	30.81	24.99	16.92	11.08	19.20
	15	39.20	33.30	25.25	19.39	27.70
	25	53.04	47.04	38.96	33.24	41.10
	37	69.40	63.50	55.42	49.86	57.30
⑥	50	66.90	61.11	52.86	44.32	55.10

RoHS compliant
Unit:mm

Scale	Free
TOLERANCE	
X.	±0.38
X.X	±0.25
X.XX	±0.13
DIM	TOL
X.°	±3°
X.X°	±1.0°
Angle	TOL

Id.	Modification	Date	Name
⑧	Add the dimension	02.09.2021	Peter
⑦	Update temperature range	11.07.2019	Xavier
⑥	Update	18.12.2018	Xavier
⑤	Add the contact plating 15u"Au	01.09.2017	Winnie
④	Add the detail contact plating	23.12.2016	Winnie
③	Update the dimension	27.02.2015	Winnie

	Date	Name
Drawn	15.08.2012	Lucas
Approved	01.09.2017	Winnie

ASSMANN WSW components

Description: D-Sub connector Male

ASSMANN WSW-No.
A-DX XX PP/Z-X

Drawing-No.
ASS 4885 CO

rev08

Customer-No.

Sheet 1/2

Female

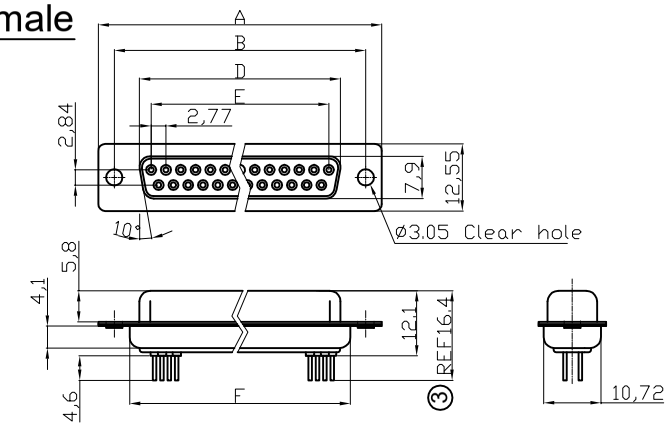

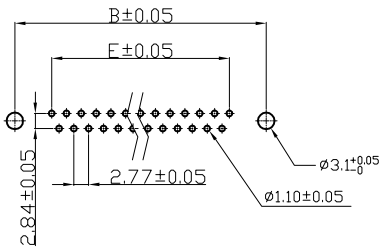

RECOMMENDED PCB LAYOUT

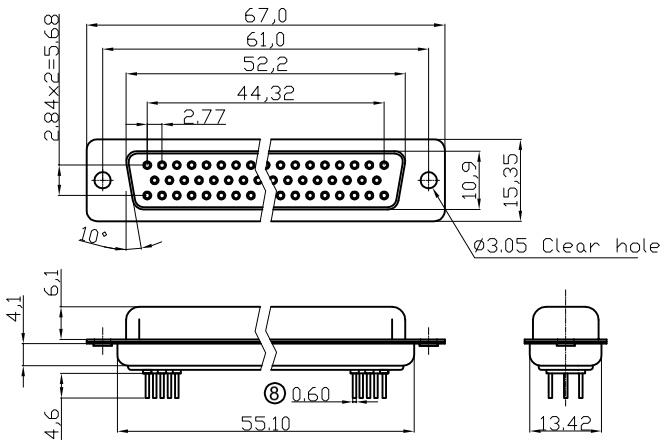

50 POSITIONS

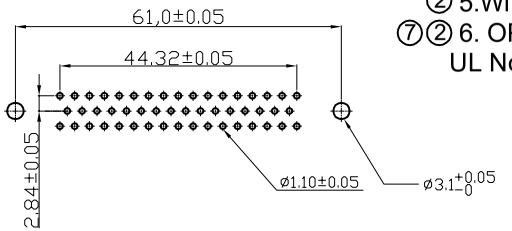

RECOMMENDED PCB LAYOUT

NOTES:

MATERIAL
1.Insulator Material:Glass-filled thermoplastic PBT,UL94V-0,Gray
2.Contact Material:Copper alloy
3.Shell :Steel, 100 µ" Tin Over 50µ" min Copper
④ 4.Clinch Nut :Brass,Nickel Plated
5.Contact plating : Gold flash full gold

ELECTRICAL
1.Current Rating : 3AMP
2.Voltage Rating : 250V AC/rms 60Hz
3.Contact Resistance: 20mΩ Max at 1 AMP DC
4.Insulation Resistance: 1000MΩ at 500 VDC
② 5.Withstand Voltage: 1000V AC/rms 60Hz for 1 minute
⑦② 6. OPERATING TEMPERATURE:-55°C+105°C
UL No. E198287

Dimensions

	Positions	A±0.15	B±0.10	D±0.13	E±0.08	F±0.10
	09	30.81	24.99	16.33	11.08	19.20
	15	39.20	33.30	24.70	19.39	27.70
	25	53.05	47.04	38.40	33.24	41.10
	37	69.40	63.50	54.80	49.86	57.30
⑥	50	67.0	61.0	52.2	44.32	55.10

RoHS compliant
Unit:mm

Scale	Free
TOLERANCE	
X.	±0.38
X.X	±0.25
X.XX	±0.13
DIM	TOL
X.°	±3°
X.X°	±1.0°
Angle	TOL

Id.	Modification	Date	Name
⑧	Add the dimension	02.09.2021	Peter
⑦	Update temperature range	11.07.2019	Xavier
⑥	Update	18.12.2018	Xavier
⑤	Add the contact plating 15u"Au	01.09.2017	Winnie
④	Add the detail contact plating	23.12.2016	Winnie
③	Update the dimension	27.02.2015	Winnie

	Date	Name
Drawn	15.08.2012	Lucas
Approved	01.09.2017	Winnie

ASSMANN wsw components

Description: D-Sub connector Female

ASSMANN WSW-No.
A-DX XX PP/Z-X

Drawing-No.
ASS 4885 CO

rev08

Customer-No.

Sheet 2/2