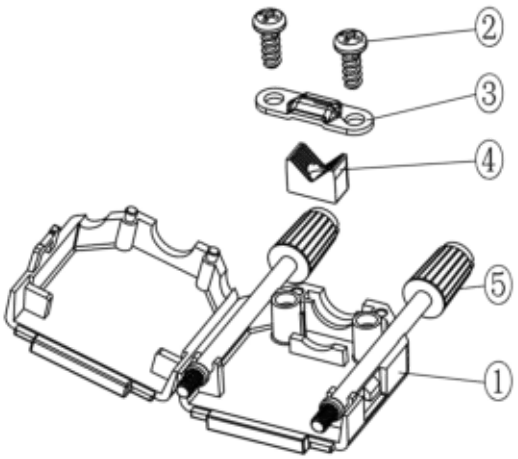

Item	QTY	Part description
1	1	Plastic Cover
2	2	EPS 3x8 Self Tapping Screw
3	1	Cable Clamp
4	1	Plastic Insert
5	2	Jackscrews UNC4-40x51mm

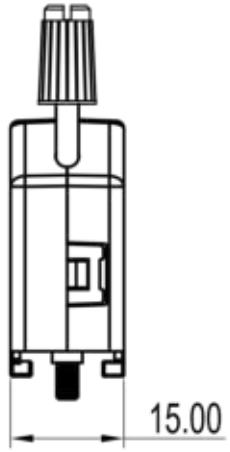

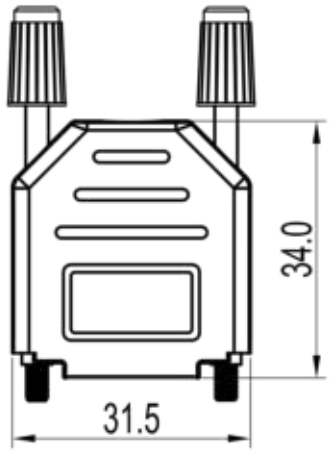

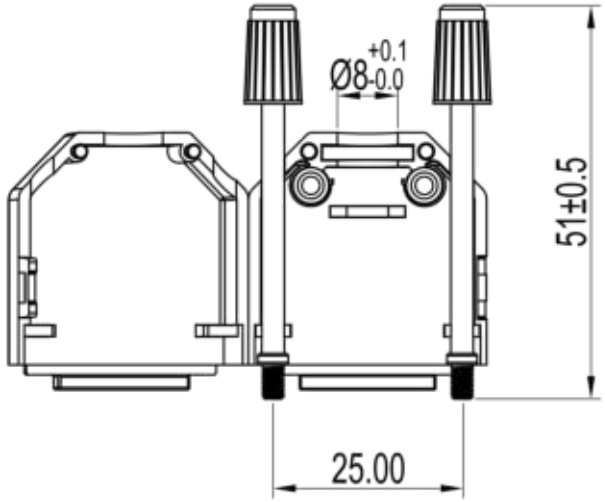

TECHNICAL SPECIFICATIONS

Material: Plastic (PA), UL94-HB
Colour: Yellow
Operating Temperature: -55°C to +110°C
Thumbscrews: UNC 4-40

No. of contacts: 09-15-25-37-50

RoHS compliant
Unit: mm

Scale	Free
TOLERANCE	
0~6	±0.10
6~30	±0.20
30~120	±0.30
120~400	±0.50
DIM	Tol
Angle	±1°
Angle	Tol

Id.	Modification	Date	Name
1	Update Dimension (page 5)	01.04.2019	M.Rosander
0	Drawn	17.08.2017	S.Bölling

	Date	Name
Drawn	17.08.2017	S.Bölling
Approved	17.08.2017	S.Bölling

ASSMANN WSW components

Customer-No.

ASSMANN WSW-No.
ACOV-SUB-09NB17

Drawing-No.
ASS_5258_CO

rev01

Replace

Sheet 1/5

SV4382

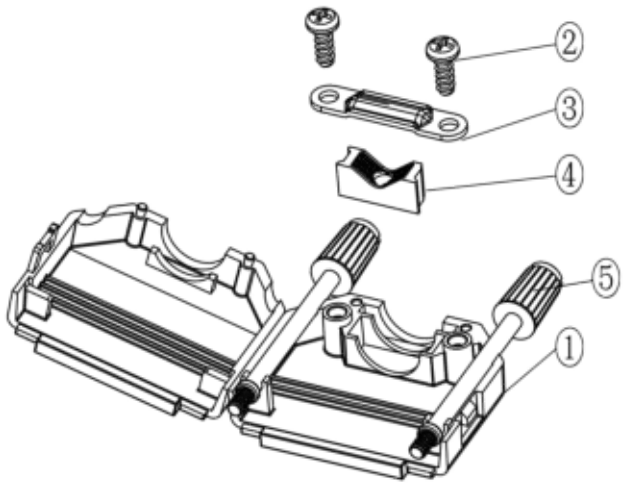

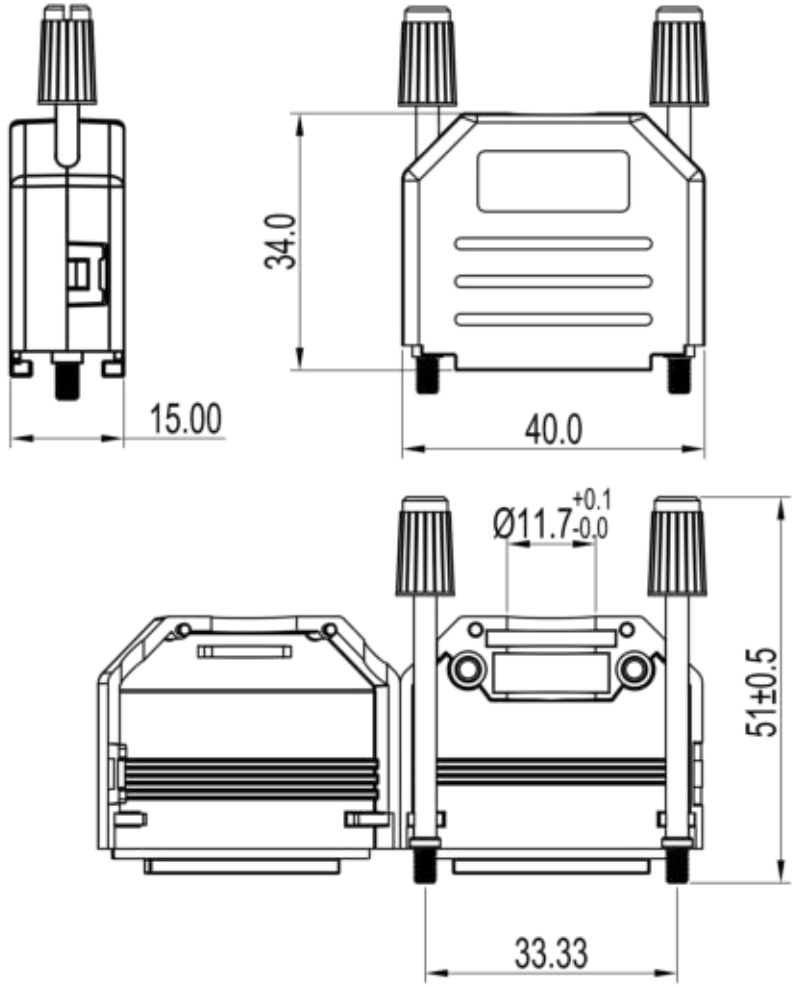

TECHNICAL SPECIFICATIONS

Material: Plastic (PA), UL94-HB
Colour: Yellow
Operating Temperature: -55°C to +110°C
Thumbscrews: UNC 4-40

No. of contacts: 09-15-25-37-50

Item	QTY	Part description
1	1	Plastic Cover
2	2	EPS 3x8 Self Tapping Screw
3	1	Cable Clamp
4	1	Plastic Insert
5	2	Jackscrews UNC4-40x51mm

RoHS compliant
Unit: mm

Scale	Free
TOLERANCE	
0~6	±0.10
6~30	±0.20
30~120	±0.30
120~400	±0.50
DIM	Tol
Angle	±1°
Angle	Tol

Id.	Modification	Date	Name
1	Update Dimension (page 5)	01.04.2019	M.Rosander
0	Drawn	17.08.2017	S.Bölling

	Date	Name
Drawn	17.08.2017	S.Bölling
Approved	17.08.2017	S.Bölling

ASSMANN WSW components

Customer-No.

ASSMANN WSW-No.
ACOV-SUB-15NB17

Drawing-No.
ASS_5258_CO

rev01

Replace

Sheet 2/5

SV4382

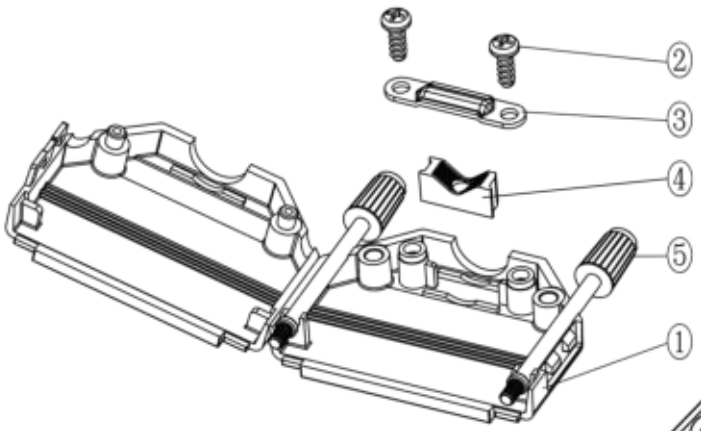

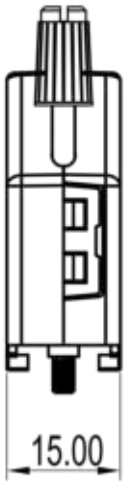

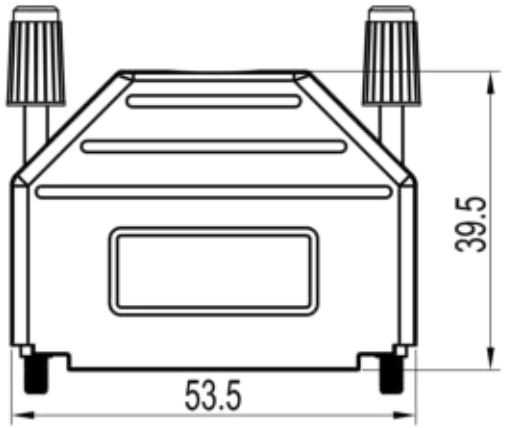

TECHNICAL SPECIFICATIONS

Material: Plastic (PA), UL94-HB
Colour: Yellow
Operating Temperature: -55°C to +110°C
Thumbscrews: UNC 4-40

No. of contacts: 09-15-25-37-50

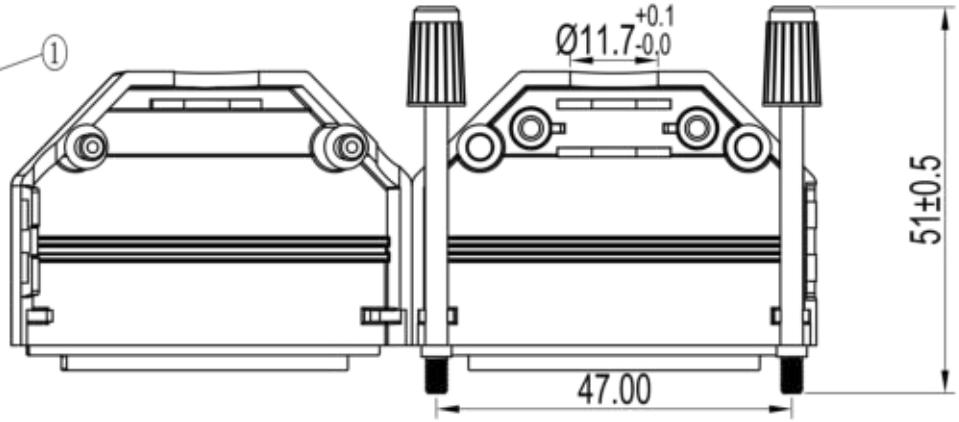

Item	QTY	Part description
1	1	Plastic Cover
2	2	EPS 3x8 Self Tapping Screw
3	1	Cable Clamp
4	1	Plastic Insert
5	2	Jackscrews UNC4-40x51mm

RoHS compliant
Unit: mm

Scale	Free
TOLERANCE	
0~6	±0.10
6~30	±0.20
30~120	±0.30
120~400	±0.50
DIM	Tol
Angle	±1°
Angle	Tol

Id.	Modification	Date	Name
1	Update Dimension (page 5)	01.04.2019	M.Rosander
0	Drawn	17.08.2017	S.Bölling

	Date	Name
Drawn	17.08.2017	S.Bölling
Approved	17.08.2017	S.Bölling

ASSMANN WSW components

Customer-No.

ASSMANN WSW-No.
ACOV-SUB-25NB17

Drawing-No.
ASS_5258_CO

rev01

Replace

Sheet 3/5

SV4382

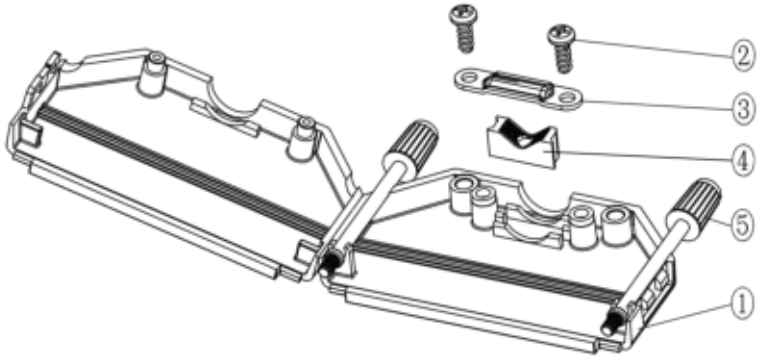

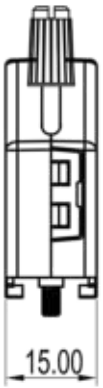

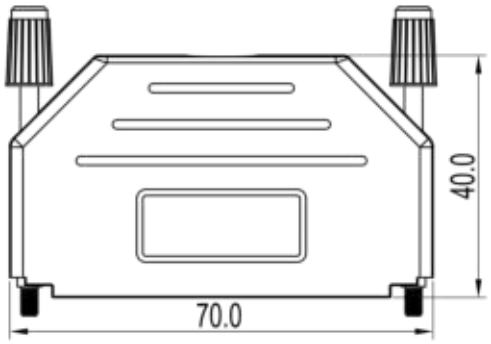

TECHNICAL SPECIFICATIONS

Material: Plastic (PA), UL94-HB
Colour: Yellow
Operating Temperature: -55°C to +110°C
Thumbscrews: UNC 4-40

No. of contacts: 09-15-25-37-50

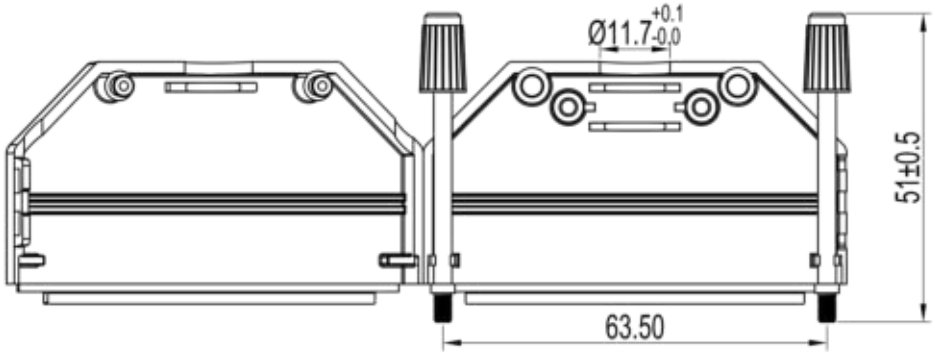

Item	QTY	Part description
1	1	Plastic Cover
2	2	EPS 3x8 Self Tapping Screw
3	1	Cable Clamp
4	1	Plastic Insert
5	2	Jackscrews UNC4-40x51mm

RoHS compliant
Unit: mm

Scale	Free
TOLERANCE	
0~6	±0.10
6~30	±0.20
30~120	±0.30
120~400	±0.50
DIM	Tol
Angle	±1°
Angle	Tol

Id.	Modification	Date	Name
1	Update Dimension (page 5)	01.04.2019	M.Rosander
0	Drawn	17.08.2017	S.Bölling

	Date	Name
Drawn	17.08.2017	S.Bölling
Approved	17.08.2017	S.Bölling

ASSMANN WSW components

Customer-No.

ASSMANN WSW-No.
ACOV-SUB-37NB17

Drawing-No.
ASS_5258_CO

rev01

Replace

Sheet 4/5

SV4382

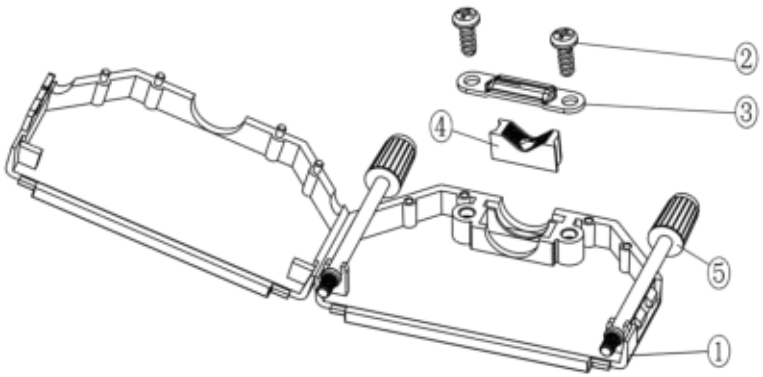

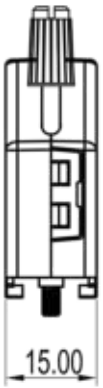

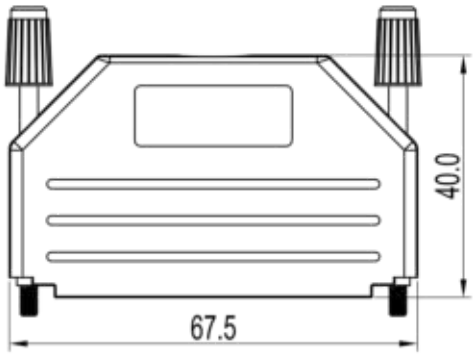

TECHNICAL SPECIFICATIONS

Material: Plastic (PA), UL94-HB
Colour: Yellow
Operating Temperature: -55°C to +110°C
Thumbscrews: UNC 4-40

No. of contacts: 09-15-25-37-50

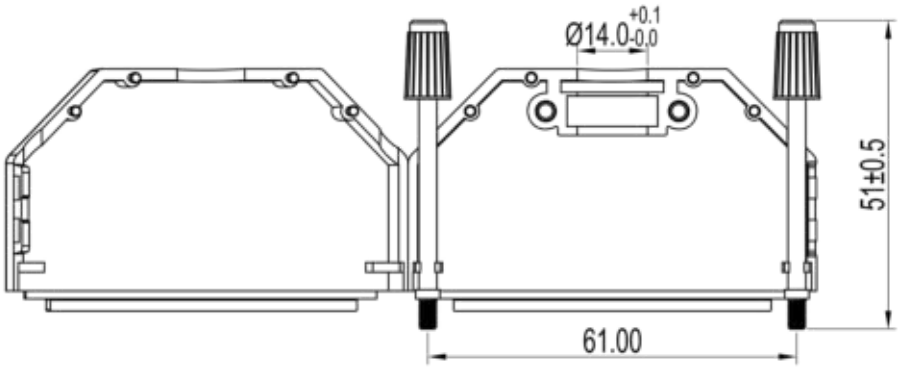

Item	QTY	Part description
1	1	Plastic Cover
2	2	EPS 3x8 Self Tapping Screw
3	1	Cable Clamp
4	1	Plastic Insert
5	2	Jackscrews UNC4-40x51mm

RoHS compliant
Unit: mm

Scale	Free
TOLERANCE	
0~6	±0.10
6~30	±0.20
30~120	±0.30
120~400	±0.50
DIM	Tol
Angle	±1°
Angle	Tol

Id.	Modification	Date	Name
1	Update Dimension (page 5)	01.04.2019	M.Rosander
0	Drawn	17.08.2017	S.Bölling

	Date	Name
Drawn	17.08.2017	S.Bölling
Approved	17.08.2017	S.Bölling

ASSMANN WSW components

Customer-No.

ASSMANN WSW-No. ACOV-SUB-50NB17

Drawing-No. ASS_5258_CO rev01

Replace

Sheet 5/5

SV4382