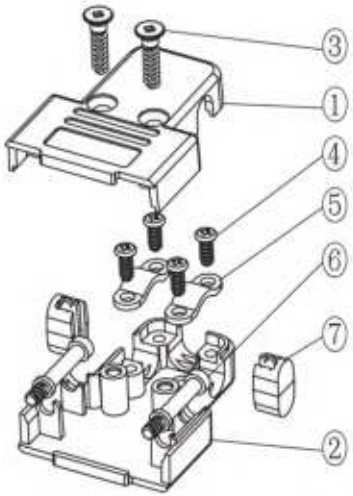

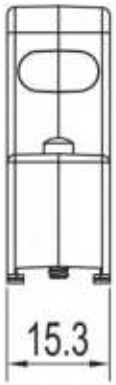

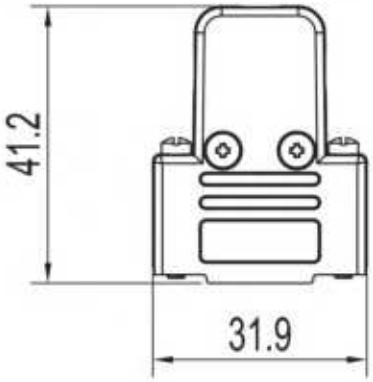

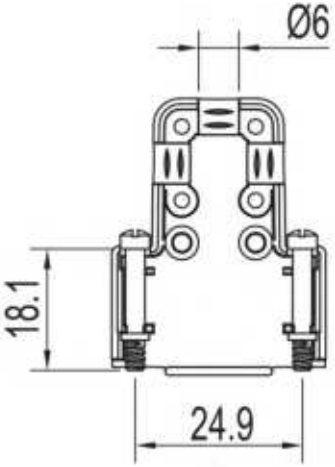

TECHNICAL SPECIFICATIONS

Material: ABS Plastic, UL94-HB
Plating: Nickel over Copper
Operating Temperature: -55°C to +110°C
Thumbscrews: UNC 4-40

No. of contacts: 09-15-25-37

Item	QTY	Part description
1	1	Upper Half
2	1	Lower Half
3	2	ST2.9x13 Self Tapping Screw
4	4	ST2.9x6 Self Tapping Screw
5	2	Cable Clamp
6	2	Jackscrews UNC4-40 x 18.1mm
7	2	Metalized Blanker

RoHS compliant
Unit: mm

Scale	Free
TOLERANCE	
0~6	±0.10
6~30	±0.20
30~120	±0.30
120~400	±0.50
DIM	Tol
Angle	±1°
Angle	Tol

Id.	Modification	Date	Name
0	Drawn	17.08.2017	S.Bölling

	Date	Name
Drawn	17.08.2017	S.Bölling
Approved	17.08.2017	S.Bölling

ASSMANN WSW components

Customer-No.

ASSMANN WSW-No.
ACOV-SUB-09MB20

Drawing-No.
ASS_5261_CO

rev00

Replace

Sheet 1/4

SV4382

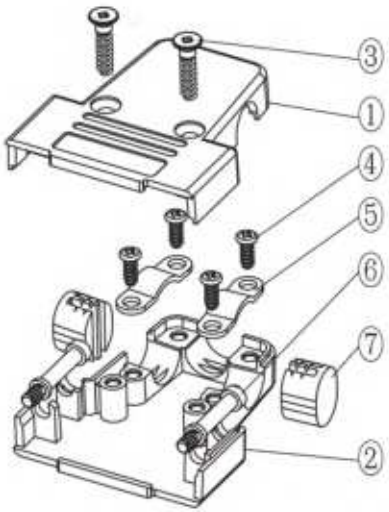

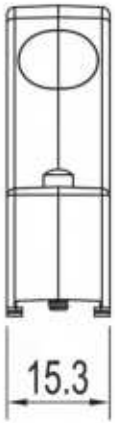

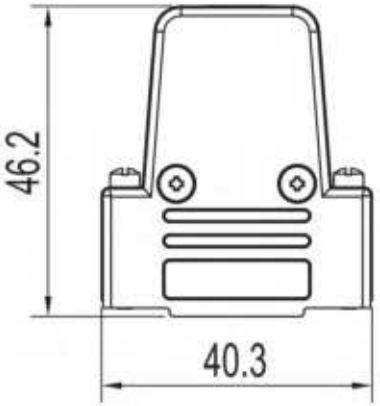

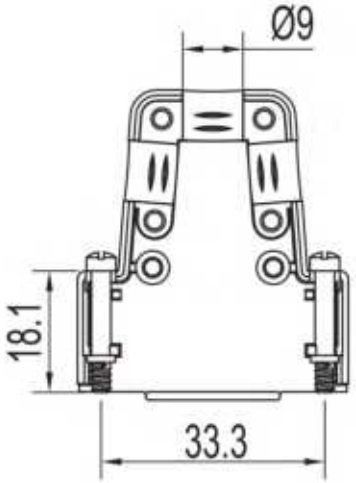

TECHNICAL SPECIFICATIONS

Material: ABS Plastic, UL94-HB
Plating: Nickel over Copper
Operating Temperature: -55°C to +110°C
Thumbscrews: UNC 4-40

No. of contacts: 09-15-25-37

Item	QTY	Part description
1	1	Upper Half
2	1	Lower Half
3	2	ST2.9x13 Self Tapping Screw
4	4	ST2.9x6 Self Tapping Screw
5	2	Cable Clamp
6	2	Jackscrews UNC4-40 x 18.1mm
7	2	Metalized Blanker

RoHS compliant
Unit: mm

Scale	Free
TOLERANCE	
0~6	±0.10
6~30	±0.20
30~120	±0.30
120~400	±0.50
DIM	Tol
Angle	±1°
Angle	Tol

Id.	Modification	Date	Name
0	Drawn	17.08.2017	S.Bölling

	Date	Name
Drawn	17.08.2017	S.Bölling
Approved	17.08.2017	S.Bölling

ASSMANN WSW components

Customer-No.

ASSMANN WSW-No.
ACOV-SUB-15MB20

Drawing-No.
ASS_5261_CO

rev00

Replace

Sheet 2/4

SV4382

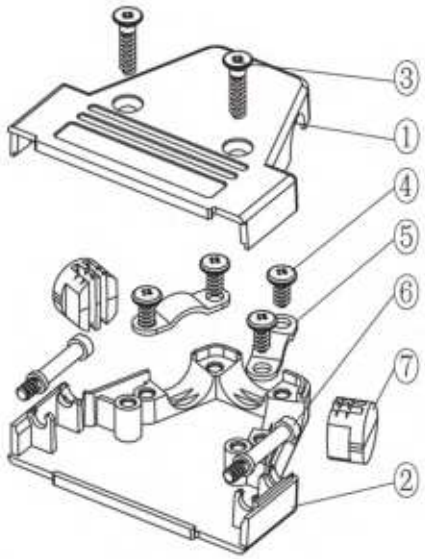

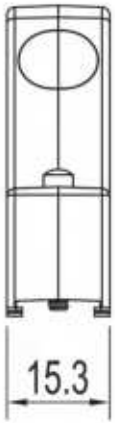

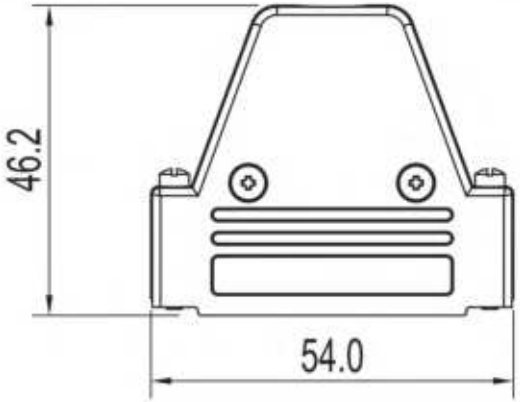

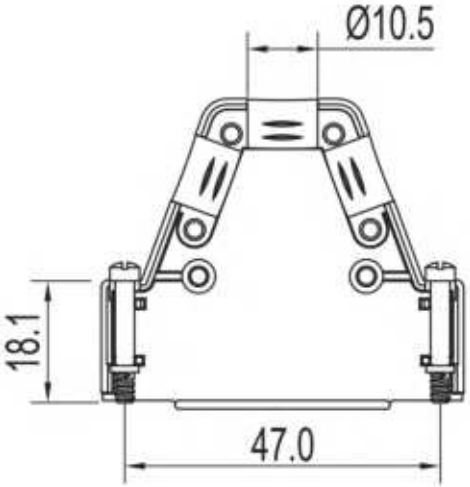

TECHNICAL SPECIFICATIONS

Material: ABS Plastic, UL94-HB
Plating: Nickel over Copper
Operating Temperature: -55°C to +110°C
Thumbscrews: UNC 4-40

No. of contacts: 09-15-25-37

Item	QTY	Part description
1	1	Upper Half
2	1	Lower Half
3	2	ST2.9x13 Self Tapping Screw
4	4	ST2.9x6 Self Tapping Screw
5	2	Cable Clamp
6	2	Jackscrews UNC4-40 x 18.1mm
7	2	Metalized Blanker

RoHS compliant
Unit: mm

Scale	Free
TOLERANCE	
0~6	±0.10
6~30	±0.20
30~120	±0.30
120~400	±0.50
DIM	Tol
Angle	±1°
Angle	Tol

Id.	Modification	Date	Name
0	Drawn	17.08.2017	S.Bölling

	Date	Name
Drawn	17.08.2017	S.Bölling
Approved	17.08.2017	S.Bölling

ASSMANN WSW components

Customer-No.

ASSMANN WSW-No.
ACOV-SUB-25MB20

Drawing-No.
ASS_5261_CO

rev00

Replace

Sheet 3/4

SV4382

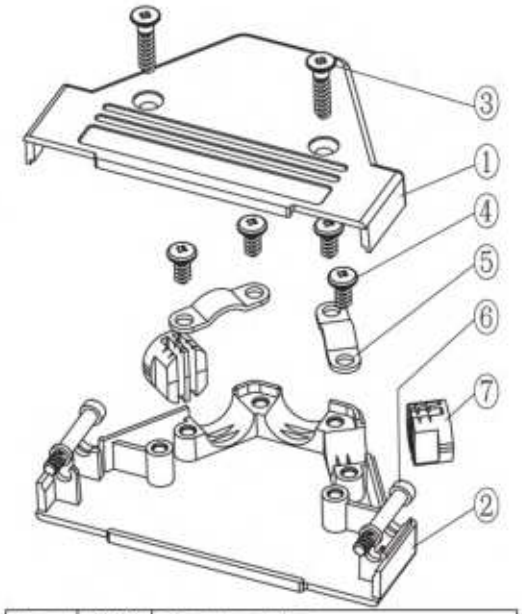

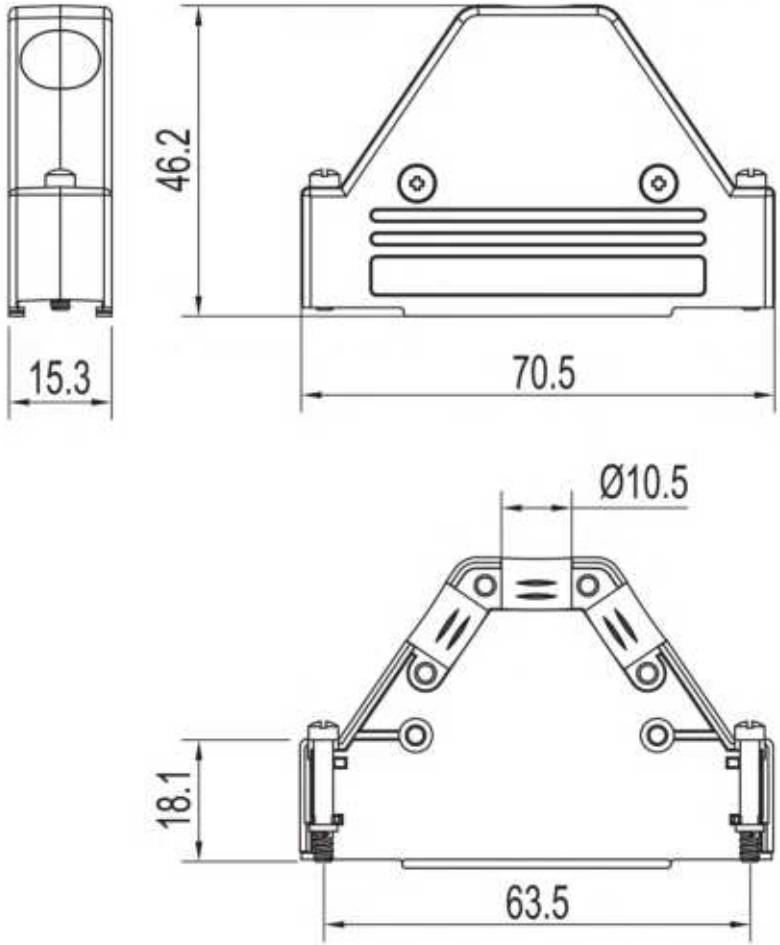

TECHNICAL SPECIFICATIONS

Material: ABS Plastic, UL94-HB
Plating: Nickel over Copper
Operating Temperature: -55°C to +110°C
Thumbscrews: UNC 4-40

No. of contacts: 09-15-25-37

Item	QTY	Part description
1	1	Upper Half
2	1	Lower Half
3	2	ST2.9x13 Self Tapping Screw
4	4	ST2.9x6 Self Tapping Screw
5	2	Cable Clamp
6	2	Jackscrews UNC4-40 x 18.1mm
7	2	Metalized Blanker

RoHS compliant
Unit: mm

Scale	Free
TOLERANCE	
0~6	±0.10
6~30	±0.20
30~120	±0.30
120~400	±0.50
DIM	Tol
Angle	±1°
Angle	Tol

Id.	Modification	Date	Name
0	Drawn	17.08.2017	S.Bölling

	Date	Name
Drawn	17.08.2017	S.Bölling
Approved	17.08.2017	S.Bölling

ASSMANN WSW components

Customer-No.

ASSMANN WSW-No.
ACOV-SUB-37MB20

Drawing-No.
ASS_5261_CO

rev00

Replace

Sheet 4/4

SV4382