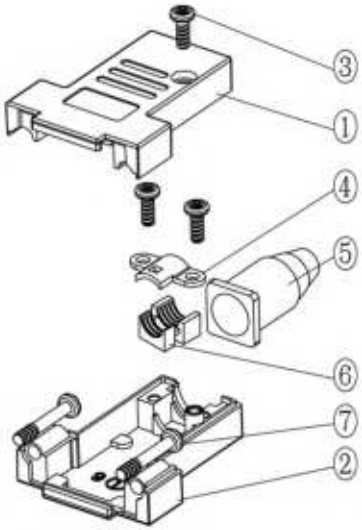

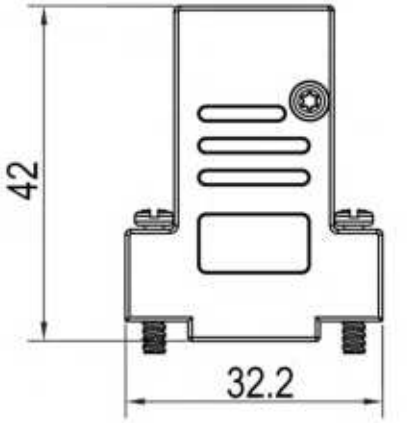

TECHNICAL SPECIFICATIONS

Material: Zinc
Plating: Nickel
Operating Temperature: -25°C to +90°C
Jackscrews: UNC 4-40

No. of contacts: 09-15-25-37

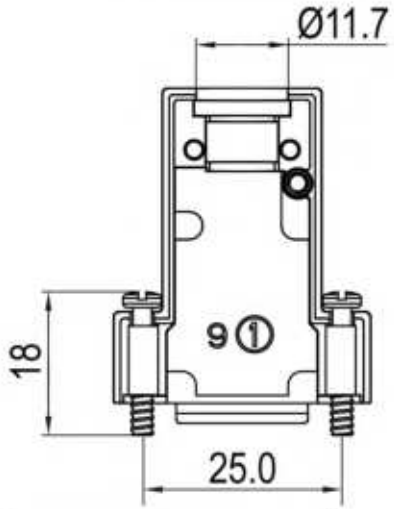

Item	QTY	Part description
1	1	Upper Cover
2	1	Lower Cover
3	3	TX M2.5x6 Screw
4	1	Cable Clamp
5	1	Rubber Grommet
6	1	Plastic Insert
7	2	Jackscrew UNC4-40x18

RoHS compliant
Unit: mm

Scale	Free
TOLERANCE	
0~6	±0.10
6~30	±0.20
30~120	±0.30
120~400	±0.50
DIM	Tol
Angle	±1°
Angle	Tol

Id.	Modification	Date	Name
0	Drawn	17.08.2017	S.Bölling

	Date	Name
Drawn	17.08.2017	S.Bölling
Approved	17.08.2017	S.Bölling

ASSMANN WSW components

Customer-No.

ASSMANN WSW-No.
ACOV-SUB-09MB30

Drawing-No.
ASS_5271_CO

rev00

Replace

Sheet 1/4

SV4382

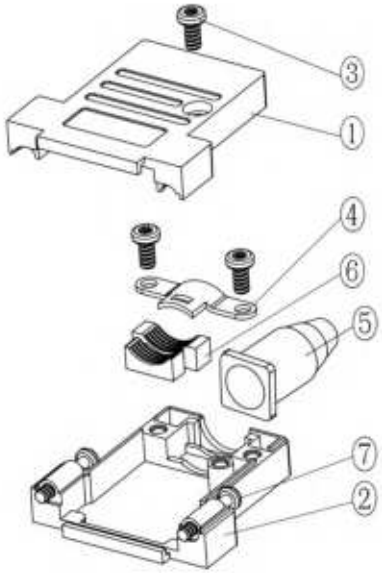

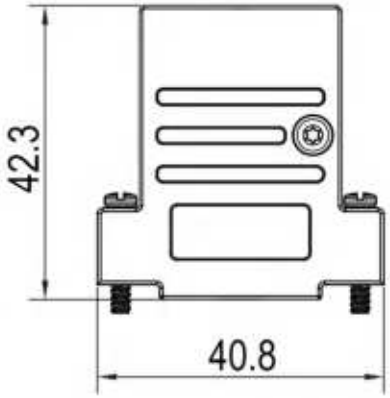

TECHNICAL SPECIFICATIONS

Material: Zinc
Plating: Nickel
Operating Temperature: -25°C to +90°C
Jackscrews: UNC 4-40

No. of contacts: 09-15-25-37

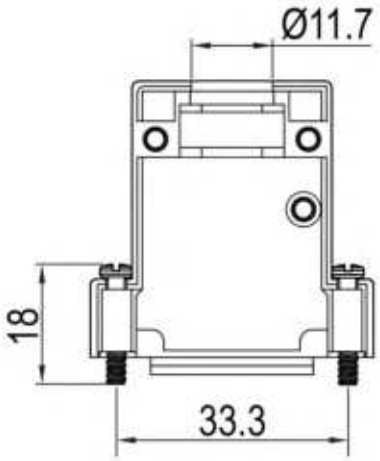

Item	QTY	Part description
1	1	Upper Cover
2	1	Lower Cover
3	3	M2.5x6 Screw
4	1	Cable Clamp
5	1	Rubber Grommet
6	1	Plastic Insert
7	2	Jackscrew UNC4-40x18

RoHS compliant
Unit: mm

Scale	Free
TOLERANCE	
0~6	±0.10
6~30	±0.20
30~120	±0.30
120~400	±0.50
DIM	Tol
Angle	±1°
Angle	Tol

Id.	Modification	Date	Name
0	Drawn	17.08.2017	S.Bölling

	Date	Name
Drawn	17.08.2017	S.Bölling
Approved	17.08.2017	S.Bölling

ASSMANN WSW components

Customer-No.

ASSMANN WSW-No.
ACOV-SUB-15MB30

Drawing-No.
ASS_5271_CO

rev00

Replace

Sheet 2/4

SV4382

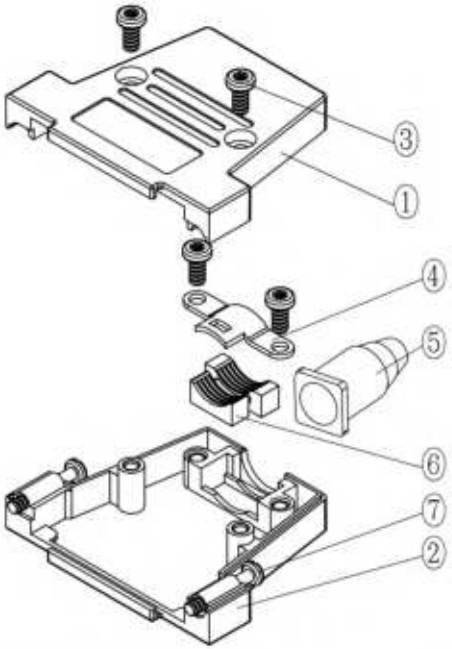

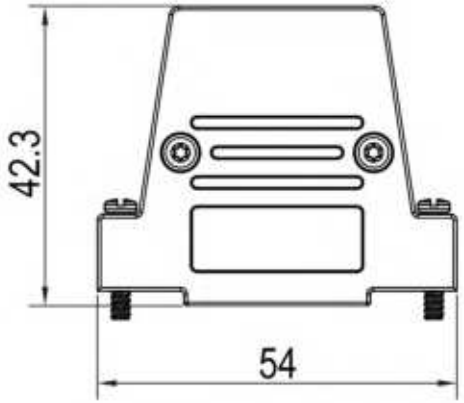

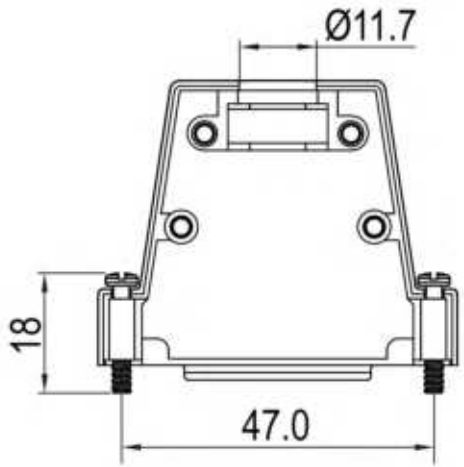

TECHNICAL SPECIFICATIONS

Material: Zinc
Plating: Nickel
Operating Temperature: -25°C to +90°C
Jackscrews: UNC 4-40

No. of contacts: 09-15-25-37

Item	QTY	Part description
1	1	Upper Cover
2	1	Lower Cover
3	4	M2.5x6 Screw
4	1	Cable Clamp
5	1	Rubber Grommet
6	1	Plastic Insert
7	2	Jackscrew UNC4-40x18

RoHS compliant
Unit: mm

Scale	Free
TOLERANCE	
0~6	±0.10
6~30	±0.20
30~120	±0.30
120~400	±0.50
DIM	Tol
Angle	±1°
Angle	Tol

Id.	Modification	Date	Name
0	Drawn	17.08.2017	S.Bölling

	Date	Name
Drawn	17.08.2017	S.Bölling
Approved	17.08.2017	S.Bölling

ASSMANN WSW components

Customer-No.

ASSMANN WSW-No.
ACOV-SUB-25MB30

Drawing-No.
ASS_5271_CO

rev00

Replace

Sheet 3/4

SV4382

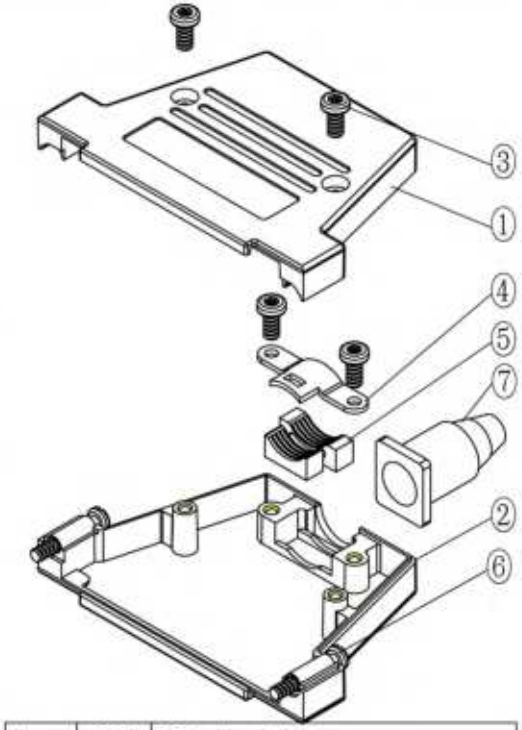

Item	QTY	Part description
1	1	Upper Cover
2	1	Lower Cover
3	4	M2.5x6 Screw
4	1	Cable Clamp
5	1	Plastic Insert
6	2	Jackscrew UNC4-40x18
7	1	Rubber Grommet

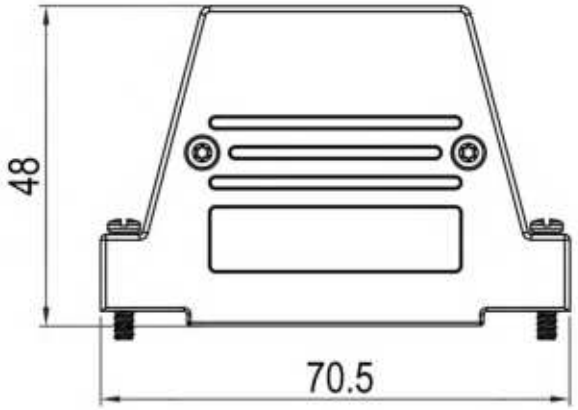

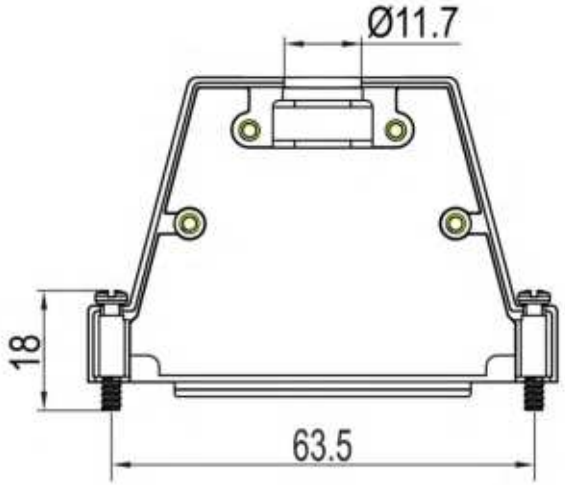

TECHNICAL SPECIFICATIONS

Material: Zinc
Plating: Nickel
Operating Temperature: -25°C to +90°C
Jackscrews: UNC 4-40

No. of contacts: 09-15-25-37

RoHS compliant
Unit: mm

Scale	Free
TOLERANCE	
0~6	±0.10
6~30	±0.20
30~120	±0.30
120~400	±0.50
DIM	Tol
Angle	±1°
Angle	Tol

Id.	Modification	Date	Name
0	Drawn	17.08.2017	S.Bölling

	Date	Name
Drawn	17.08.2017	S.Bölling
Approved	17.08.2017	S.Bölling

ASSMANN WSW components

Customer-No.

ASSMANN WSW-No.
ACOV-SUB-37MB30

Drawing-No.
ASS_5271_CO

rev00

Replace

Sheet 4/4

SV4382