ESE22 Detector Switches

Type: **ESE22**

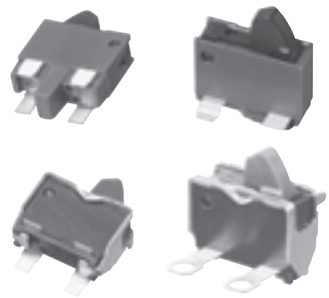

■ Features

- Can be operated with different actuation angles (horizontally and vertically)
- Reflow soldering
- Light operating force

■ Recommended Applications

- Detection of media in portable electronic equipment

■ Explanation of Part Numbers

1	2	3	4	5	6	7	8	9
E	S	E	2	2				
Product Code			Type		Style		Design No.	

■ Specifications

Rating	50 μA 3 V DC to 10 mA 5 V DC (Resistive load)
Contact Resistance	500 mΩ max. (Initial)
Insulation Resistance	100 MΩ min. (at 100 V DC for 1 minute)
Dielectric Withstanding Voltage	100 V AC (50 Hz or 60 Hz) for 1 minute
Operating Force	290 mN max.
Mounting Height	· ESE22MV Type 4.1 mm · ESE22MH Type 2.1 mm · ESE22MH Type with Frame 2.85 mm
Poles and Throws	1-pole 1-throw
Full Travel (Pushing distance)	· ESE22MV Type 4.25 mm(2.05 mm) · ESE22MH Type 1.2 mm(2.0 mm) · ESE22MH Type with Frame 0.6 mm(2.0 mm)
Operating Life	50,000 cycles min.
Temperature Range	–10 °C to +70 °C (Standard), –40 °C to +85 °C (Automotive)
Heat Resistance	+80 °C for 96 hours
Low Temperature Resistance	–25 °C for 96 hours
Humidity Resistance	+40 °C 90 % to 95 % RH for 96 hours
Minimum Quantity/Packing Unit	500 pcs. Polyethylene Bag (Bulk)
	· ESE22MV Type 1,000 pcs. Embossed Taping (Reel Pack) · ESE22MH Type with Frame 3,000 pcs. Embossed Taping (Reel Pack) · ESE22MH Type 4,000 pcs. Embossed Taping (Reel Pack)
Quantity/Carton	10,000 pcs. Polyethylene Bag (Bulk)
	· ESE22MV Type 6,000 pcs. Embossed Taping (Reel Pack) · ESE22MH Type with Frame 18,000 pcs. Embossed Taping (Reel Pack) · ESE22MH Type 24,000 pcs. Embossed Taping (Reel Pack)

Design and specifications are each subject to change without notice. Ask factory for the current technical specifications before purchase and/or use.
Should a safety concern arise regarding this product, please be sure to contact us immediately.

 © Panasonic Corporation 2017

■ Dimensions in mm (not to scale)

Type	Part Numbers	H : boss	Packaging
	ESE22MH21	0.5	Polyethylene Bag (Bulk)
	ESE22MH27	1.0	Polyethylene Bag (Bulk)
	ESE22MH22	0.5	Embossed Taping (Reel Pack)
	ESE22MH27T	1.0	Embossed Taping (Reel Pack)

Type	Part Numbers	H : boss	Packaging
	ESE22MH23	0.5	Polyethylene Bag (Bulk)
	ESE22MH28	1.0	Polyethylene Bag (Bulk)
	ESE22MH24	0.5	Embossed Taping (Reel Pack)
	ESE22MH28T	1.0	Embossed Taping (Reel Pack)

No. 1 1-pole 1-throw

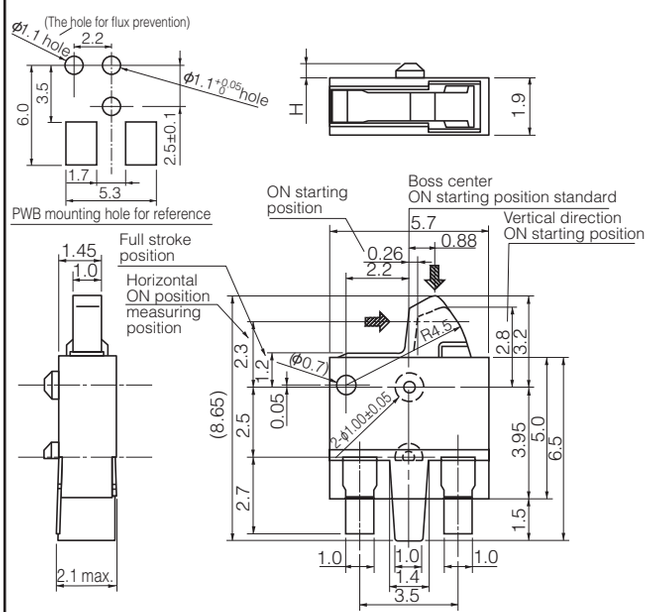

No. 2 1-pole 1-throw

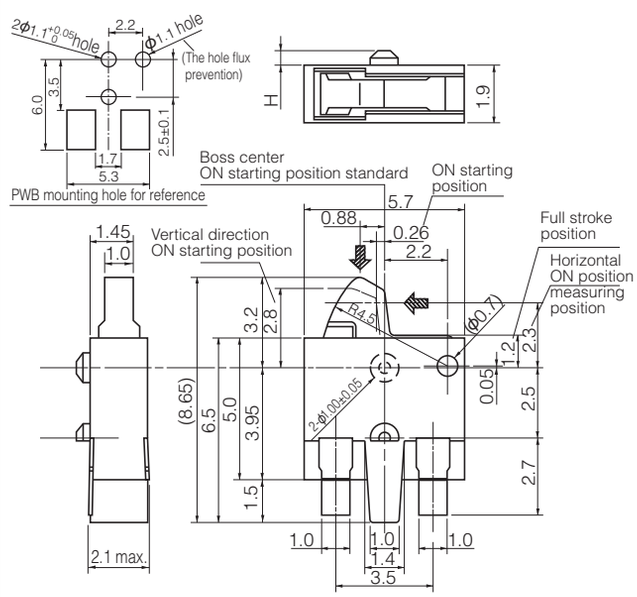

Part Numbers	Packaging
ESE22MV21	Polyethylene Bag (Bulk)
ESE22MV21T	Embossed Taping (Reel Pack)

No. 3 1-pole 1-throw

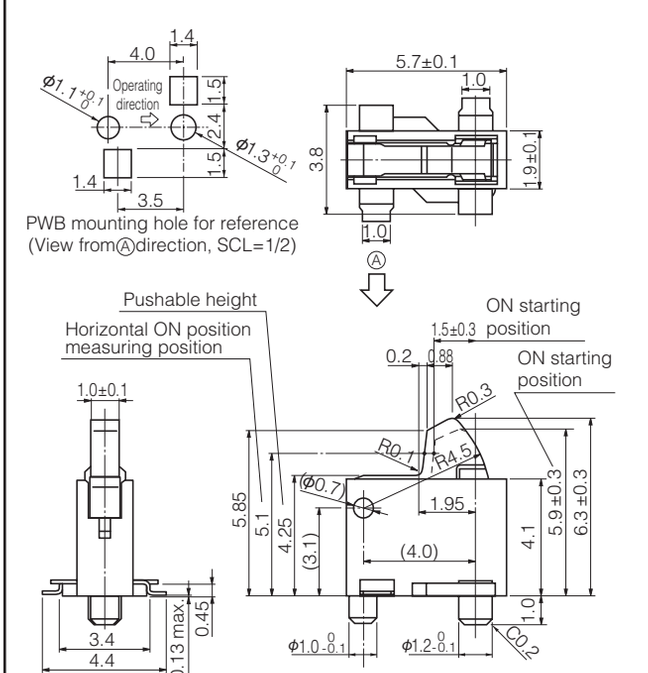

Part Numbers	Packaging
ESE22MH51	Polyethylene Bag (Bulk)
ESE22MH52	Embossed Taping (Reel Pack)

No. 4 1-pole 1-throw

With Frame Type

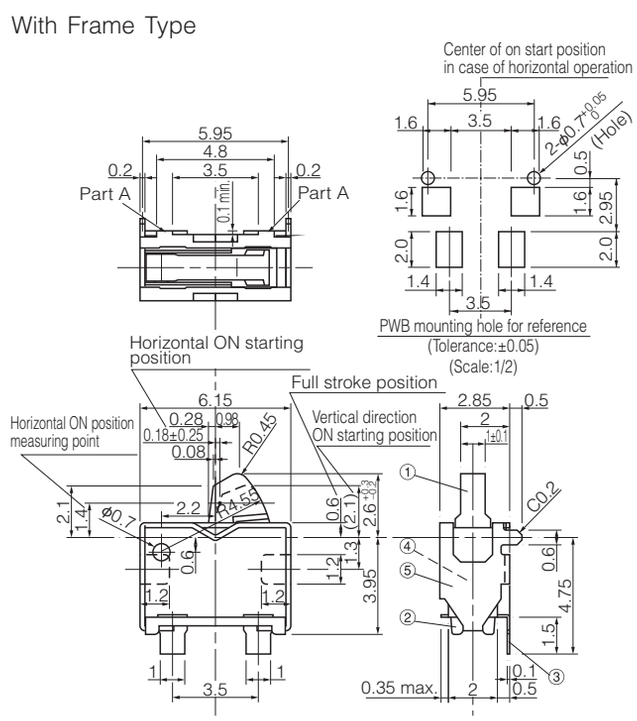

Design and specifications are each subject to change without notice. Ask factory for the current technical specifications before purchase and/or use.
Should a safety concern arise regarding this product, please be sure to contact us immediately.

© Panasonic Corporation 2017

■ Dimensions in mm (not to scale)

Part Numbers	Packaging
ESE22MH53	Polyethylene Bag (Bulk)
ESE22MH54	Embossed Taping (Reel Pack)

No. 5 1-pole 1-throw

With Frame Type

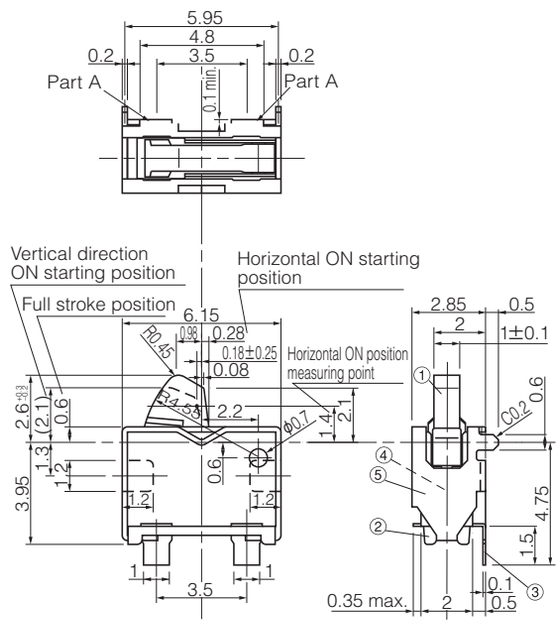

Part Numbers	Packaging
ESE22MH57	Polyethylene Bag (Bulk)

No. 6 1-pole 1-throw

Solder lug Type

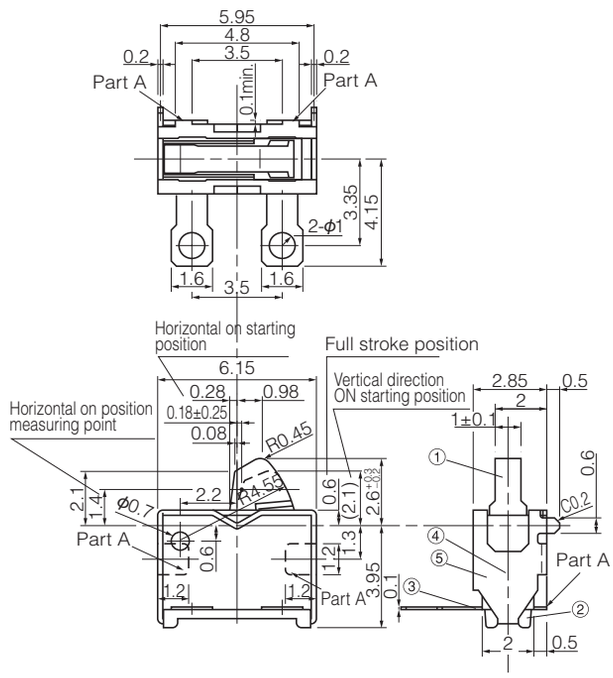

Part Numbers	Packaging
ESE22MH58	Polyethylene Bag (Bulk)

No. 7 1-pole 1-throw

Solder lug Type

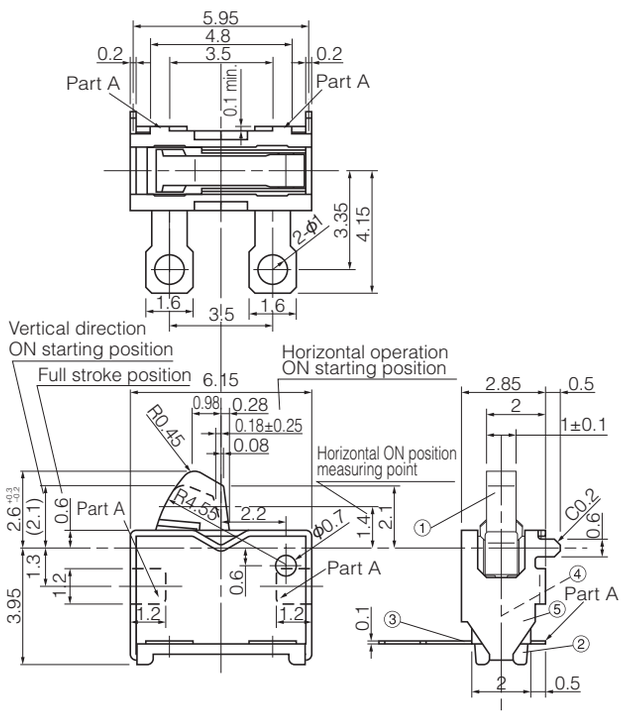

■ Circuit Diagram

1-pole 1-throw (N.O)

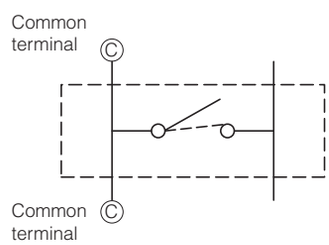

■ Packaging Specifications

Standard Reel Dimensions in mm (not to scale)

Taping Reel Embossed Carrier Taping

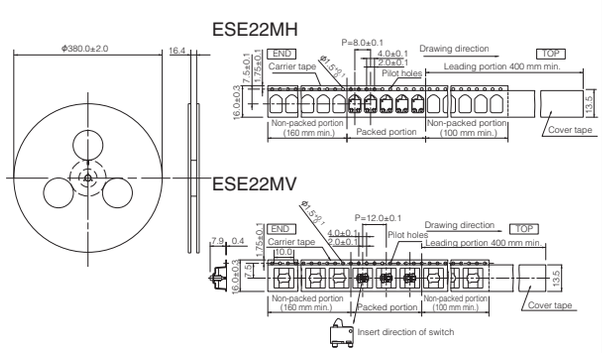

Design and specifications are each subject to change without notice. Ask factory for the current technical specifications before purchase and/or use.
Should a safety concern arise regarding this product, please be sure to contact us immediately.

© Panasonic Corporation 2017