2-by-3 QSFP+ and zQSFP+ Insertion Tool

molex

Application Tooling Specification Sheet

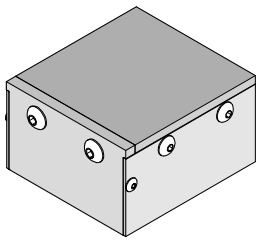

Order No. 62202-9630

FEATURES

- Lightweight tool used in the insertion of a QSFP connector in a PCB
- Inserts connector to a PCB without damage to the board
- Use tool 62202-9640 for removing connectors
- PCB support not included (furnished by customer).

SCOPE

Products: QUAD Small Form-factor Pluggable Plus (QSFP+ and zSQFP+) Cage Assembly, 2-by-3 Multi-Port Connector, Press Fit, Elastomeric or Spring Finger Gasket.

Connector Series No.	Connector Order No.				
76870	76870-0001	76870-0002	76870-0003	76870-0004	
76894	79894-0001	76894-0002			
171262	171262-0001	171262-0002	171262-0003	171262-0004	
171565	171565-3001	171565-3002	171565-3003	171565-3004	171565-3014
171722	171722-3001	171722-3002	171722-3003	171722-3062	

Notes:

1. See the following pages for tooling operation instructions.
2. This tool requires a "Keep Out Zone" around the connector free of components. The rear of the connector should be 6.0mm (0.236"). The right and left sides should be 2.0mm (0.078"). See Figure 1.

Description

The following instructions are used for inserting the 2 by 3 connector into a PCB.

Operation

1. Place a connector assembly on the PCB.
2. Place the tool on the connector assembly (closed end to the back end of the connector). See Figure 2.

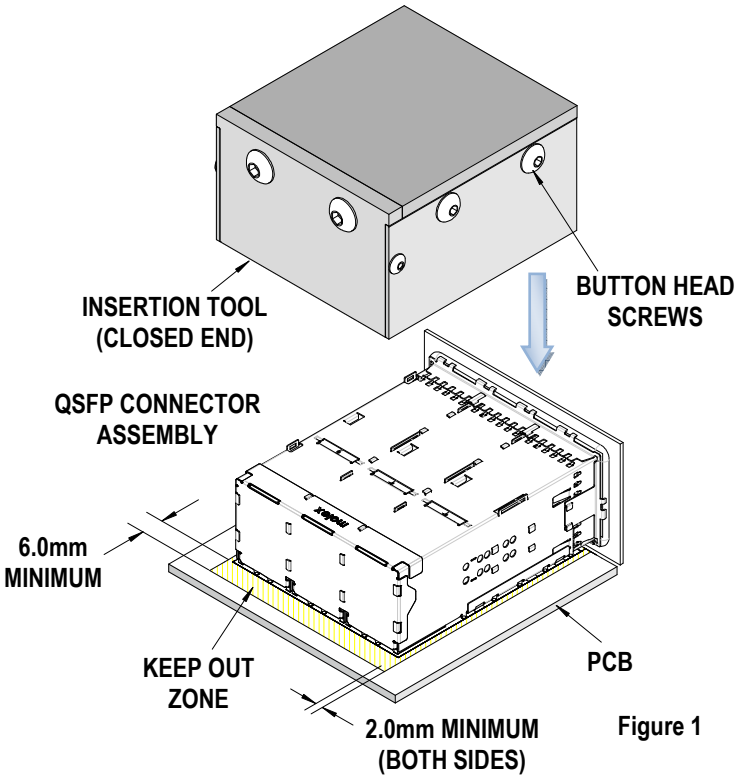

Figure 1

3. Place tool, connector, and PCB, in a press of suitable size and force, and seat the connector assembly as shown. The support plate (furnished by the customer) under the PCB must have clearance for the connector pins as they pass through the PCB.

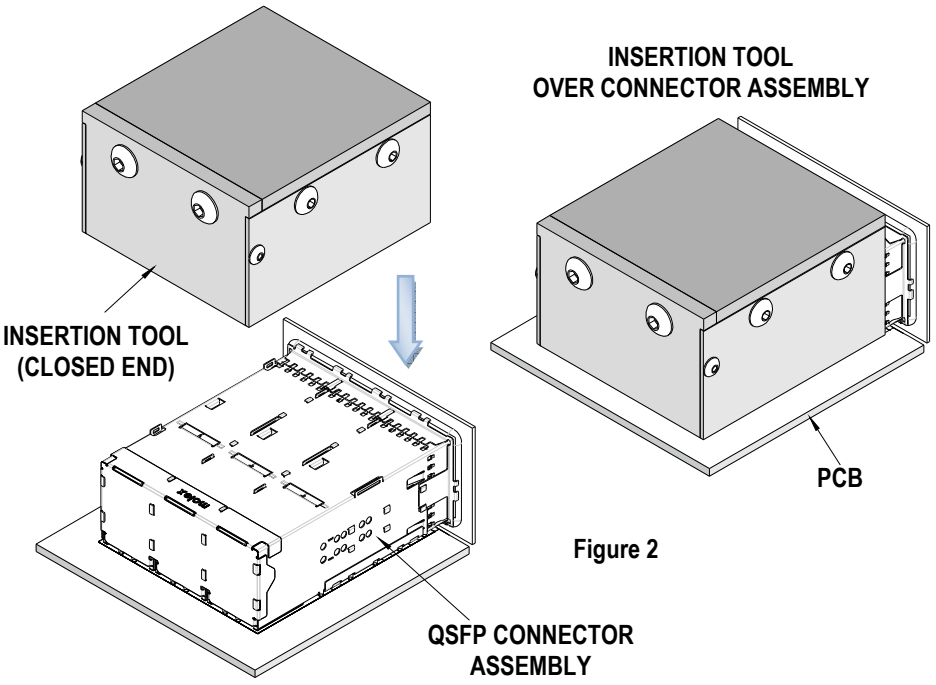

Figure 2

Clearance

Use this tool only with a press that has a predetermined shut height when seating a QSFP Assembly on a PCB. See figure 3. Allowing the Press-In Tool to stop on the board will result in damage the QSFP cage and terminals being over seated.

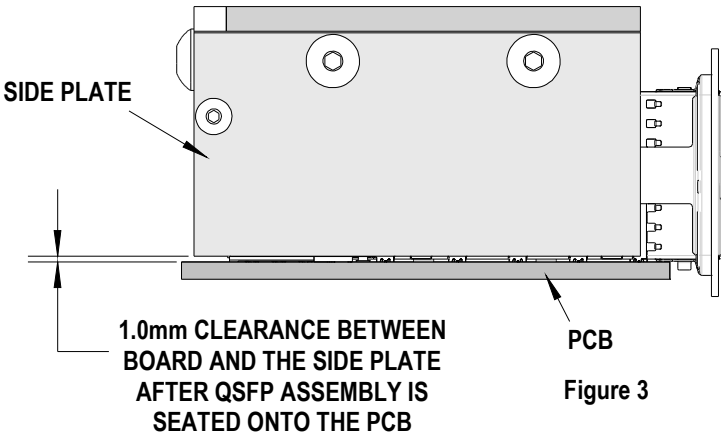

Figure 3

CAUTION: Molex application tooling specifications are valid only when used with Molex connectors and tooling.

Application Tooling Support

Phone: +1-402-458-TOOL (8665)
E-Mail: applicationtooling@molex.com
Website: www.molex.com/applicationtooling