HAND CRIMP TOOL	molex **Application Tooling Specification Sheet**	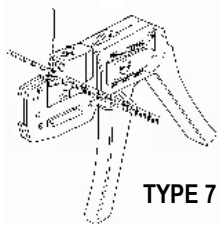 TYPE 7 **Order No. 63811-0000**

FEATURES

- This tool is designed to be used with reeled product due to the small size of the connector
- This tool is designed for prototype work only and is not designed for production
- The reeled product must be cut into 1-inch strips to be processed in this hand tool

SCOPE

Products: 1.25mm (.049") Pitch Wire–To-Board Crimp Receptacle Terminal, 26-32 AWG.

Terminal Series No.	Terminal Order No. Reel Only		Wire Size AWG	Wire Size mm²	Insulation Diameter mm	Insulation Diameter In.	Strip Length mm	Strip Length In.
50058	50058-8000	50058-8300	28-32	0.08-0.03	0.67-1.00	.027-.039	1.40-1.90	.055-.075
	50058-8099	50058-8500						
• 50079	50079-8000	39-00-0413	26-28	0.12-0.08	0.67-1.00	.027-.039	1.40-1.90	.055-.075
	50079-8053	39-00-0414						
	50079-8099							
• Requires Optional Tool Kit. See Page 4.								

DEFINITION OF TERMS

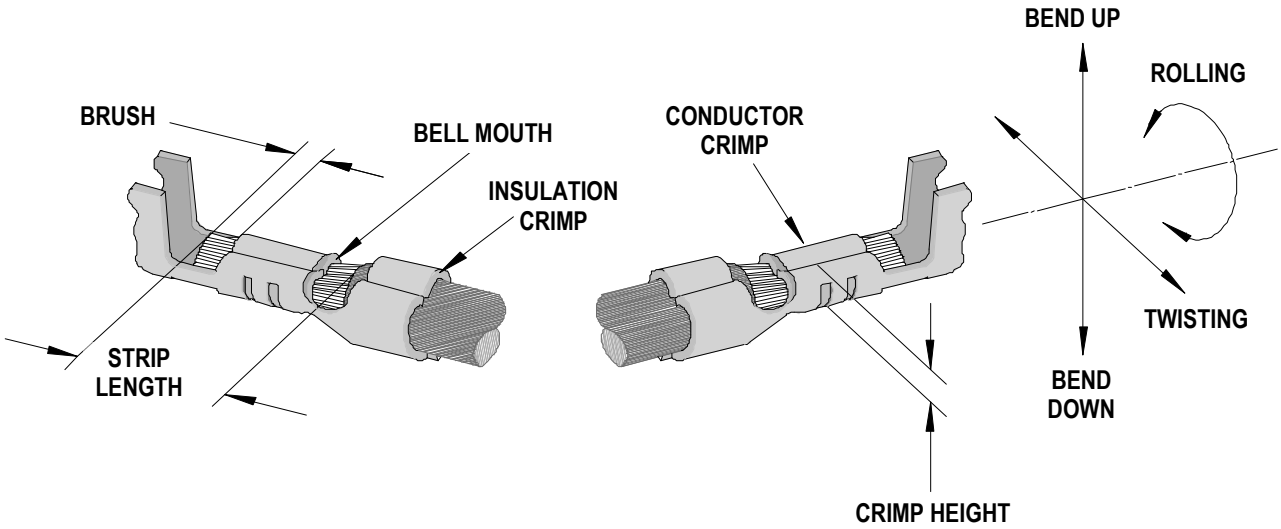

The above terminal drawing is a generic terminal representation. It is not an image of a terminal listed in the scope.

INSULATION CRIMP FORM

This crimp terminal is designed for miniaturization; therefore, each dimension of insulation crimp portion appears small as compared to the terminal material thickness. In order to avoid insulation piercing the crimp forms by the insulation barrel, coining is provided inside of the insulation barrel. For this reason, various crimp forms will occur at the tip of the insulation crimp barrel shown in the figure below.

These crimp forms maybe changed completely by a small change in the wire, insulation punch, or terminal.

These crimp forms are satisfactory for original function of the insulation crimp portion and it is confirmed that all of these forms below are acceptable insulation crimps.

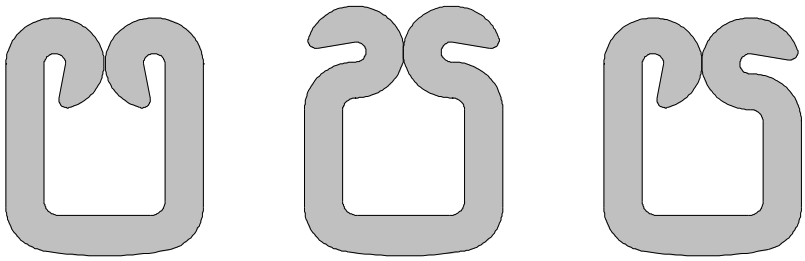

CONDITIONS

After crimping, the conductor profiles should measure the following (see notes on page 4).

Terminal Series No.	Wire Size		Conductor Crimp (Ref)				Pull Force Minimum	
			Height		Punch Width			
	AWG	mm²	mm	In.	mm	In.	N	Lb.
50058	28	0.08	0.46-0.56	.018-.022	0.80	.030	9.80	2.20
	30	0.05	0.43-0.53	.017-.021	0.80	.030	4.90	1.10
	32	0.03	0.40-0.50	.016-.020	0.80	.030	2.94	0.66
• 50079	26	0.12	0.53-0.58	.021-.023	0.80	.030	9.8	2.20
	28	0.08	0.53-0.58	.021-.023	0.80	.030	9.8	2.20
• Requires Optional Tool Kit. See Page 4.								

Note: There are different tooling sets for each terminal listed above. See parts list and Figure 1 for the correct tooling for each terminal.

Maintenance

It is recommended that each operator of the tool be made aware of, and responsible for, the following maintenance steps:

1. Remove dust, moisture, and other contaminants with a clean brush, or soft, lint free cloth.
2. Do not use any abrasive materials that could damage the tool.
3. Make certain all pins; pivot points and bearing surfaces are protected with a thin coat of high quality machine oil. Do not oil excessively.
4. When tool is not in use, store in a clean, dry area.

Miscrimps or Jams

Should this tool ever become stuck or jammed in a partially closed position, **Do Not** force the handles open or closed. The tool will open easily by pushing the ratchet release lever.

Warranty

This tool is for electrical terminal crimping purposes only. This tool is made of the best quality materials. All vital components are long life tested. All tools are warranted to be free of manufacturing defects for a period of **30 days.** Should such a defect occur, we would exchange the tool free of charge. This will not be applicable to altered, misused, or damaged tools. This tool is designed for hand use only. Any clamping, fixturing, or use of handle extensions voids this warranty.

Hand held crimping tools are intended for low volume, prototyping, or repair requirements only.

Caution: Repetitive use of this tool should be avoided.

Notes:

1. This tool should only be used for the terminals and wire gauges specified on this sheet.
2. This tool is not adjustable. Variations in tools, terminals, and wire stranding and insulation types may affect crimp height.
3. This tool is intended for standard conductor sizes. It may not give a good insulation crimp support for all insulation sizes.
4. Molex does not repair hand tools (see warranty above). The replacement parts listed are the only parts available for repair. If the handles or crimp tooling is damaged or worn, a new tool must be purchased.
5. Pull force should be used as the final criteria for an acceptable crimp. Pull force is measured with no influence from the insulation crimp. The insulation should be stripped long (1/2 in.) so the insulation grips on the terminal do not grip the wire insulation or the conductor. Refer to Molex Quality Crimping Handbook 63800-0029 for additional information on crimping and crimp testing.
6. Molex does not certify crimp hand tools.

CAUTION: Molex crimp specifications are valid only when used with Molex terminals, applicators and tooling.

PARTS LIST

Item	Order No	Description	Use only with Terminal	Quantity
	63811-0000	Hand Crimp Tool	---	Figure 1
1	63811-0001	Insulation Punch	50058	1
2	63811-0002	Conductor Punch	50058	1
3	63811-3701	Insulation Punch	50079	0
4	63811-3702	Conductor Punch	50079	0
5	63811-0003	Combination Anvill	All	1
6	63811-0004	Carrier Guide	All	1
7	63811-0005	Spring	All	1
8	63811-0070	50058 Tool Kit	Includes 1 each of Item No. 1 and 2	0
9	63811-3770	50079 Tool Kit (Optional)	Includes 1 each of Item No. 3 and 4 (Not include with Hand Tool.)	0

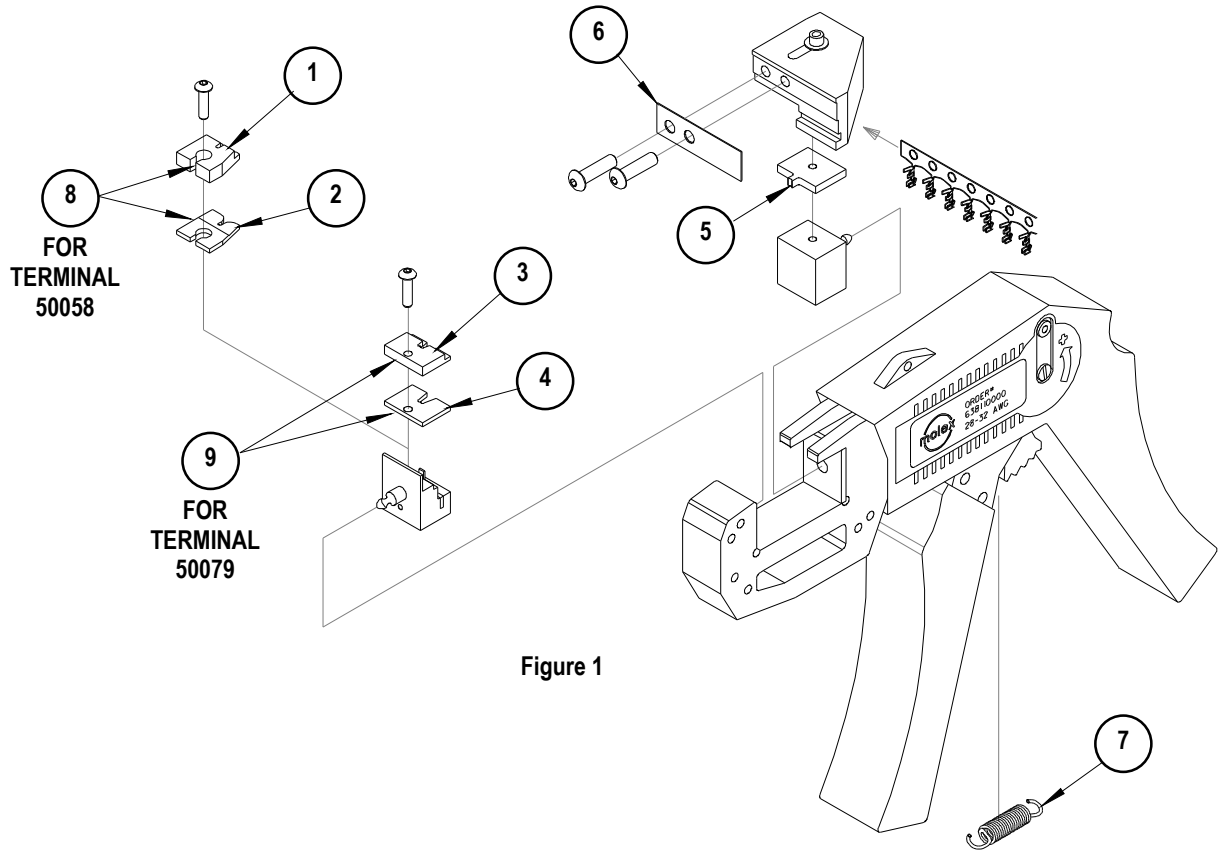

Figure 1

Visit our Web site at http://www.molex.com