HAND CRIMP TOOL
Operating Instruction and Specification Sheet
Order No. 63811-2800

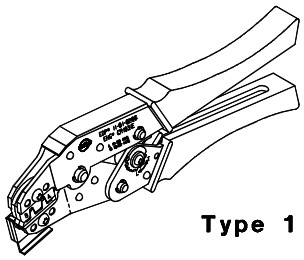
Type 1

FEATURES

- Small handle spread which make this style tool ideally suited for end users
- Ratchet with safety release that ensures consistent performance
- A precision user-friendly terminal locator wire stop holds terminals in the proper crimping position

SCOPE

Products: Micro-Fit 3.0™ Male and Female Crimp Terminal, 20-30 AWG.

Terminal Series No.	Terminal Order No.				Wire Size		Insulation Diameter		Strip Length	
	Loose Piece		✳Reel		AWG	mm²	mm	In.	mm	In.
43030	43030-0007	43030-0009	43030-0001	43030-0003	20-24	0.50-0.20	1.42-1.85	.056-.073	2.54-2.92	.100-.115
	43030-0008	43030-0057	43030-0002	43030-0051						
	43030-0010	43030-0012	43030-0004	43030-0006	26-30	0.12-0.05	1.09-1.27	.043-.050	2.54-2.92	.100-.115
	43030-0011		43030-0005							
43031	43031-0007	43031-0057	43031-0001	43031-0052	20-24	0.50-0.20	1.42-1.85	.056-.073	2.54-2.92	.100-.115
	43031-0008	43031-0059	43031-0002	43031-0053						
	43031-0009		43031-0003	43031-0102						
	43031-0016		43031-0017	43031-0103						
			43031-0051							
	43031-0010	43031-0012	43031-0004	43031-0006	26-30	0.12-0.05	1.09-1.27	.043-.050	2.54-2.92	.100-.115
	43031-0011		43031-0005	43031-0106						
✳ Customer to cut off terminal from reel: 0.15mm (.006") maximum Cut-off Tab.										

DEFINITION OF TERMS

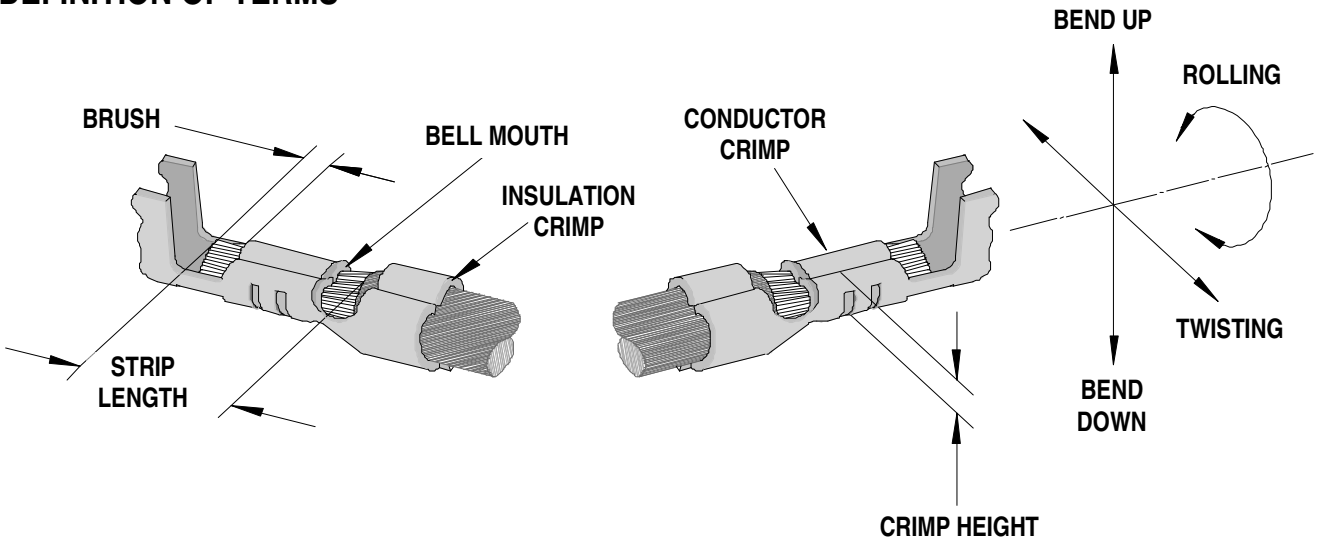

The above terminal drawing is a generic terminal representation. It is not an image of a terminal listed in the scope.

CONDITIONS:

After crimping, the conductor profiles should measure the following (see notes on page 4).

Terminal Series No.	Wire Size		Conductor Crimp				Insulation Crimp		Pull Force Minimum		Profile	
			Height (Ref)		Width (Ref)		Width (Ref)					
	AWG	mm²	mm	In.	mm	In.	mm	In.	N	Lb.	A	B
43030	20	0.50	0.78-0.89	.031-.035	1.40	.055	1.90	.075	57.8	13.00	X	
	22	0.35	0.76-0.86	.030-.034	1.40	.055	1.90	.075	35.6	8.00	X	
	24	0.20	0.76-0.86	.030-.034	1.40	.055	1.90	.075	22.2	5.00	X	
	26	0.12	0.68-0.78	.027-.031	1.10	.043	1.60	.063	13.3	3.00		X
	28	0.08	0.66-0.76	.026-.030	1.10	.043	1.60	.063	8.9	2.00		X
	30	0.05	0.66-0.76	.026-.030	1.10	.043	1.60	.063	6.7	1.50		X
43031	20	0.50	0.78-0.89	.031-.035	1.40	.055	1.90	.075	57.8	13.00	X	
	22	0.35	0.76-0.86	.030-.034	1.40	.055	1.90	.075	35.6	8.00	X	
	24	0.20	0.76-0.86	.030-.034	1.40	.055	1.90	.075	22.2	5.00	X	
	26	0.12	0.68-0.78	.027-.031	1.10	.043	1.60	.063	13.3	3.00		X
	28	0.08	0.66-0.76	.026-.030	1.10	.043	1.60	.063	8.9	2.00		X
	30	0.05	0.66-0.76	.026-.030	1.10	.043	1.60	.063	6.7	1.50		X

OPERATION

Open the tool by squeezing the handles together, at the end of the closing stroke, the ratchet mechanism will release the handles, and the hand tool will spring open.

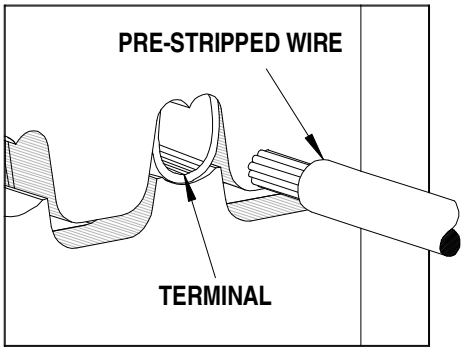

Figure 1

Crimping Terminals

1. Lift the locator blade and place the terminal into the correct die profile (A or B), release the locator blade. Not all tools are equipped with a locator or locator blade.
2. Partially close the tool until the terminal is held in place. See Figure 2.
3. Place a wire into the terminal and up against the locator blade. See Figure 3. On tools without locators line the wire up with the conductor and insulation grips visually.

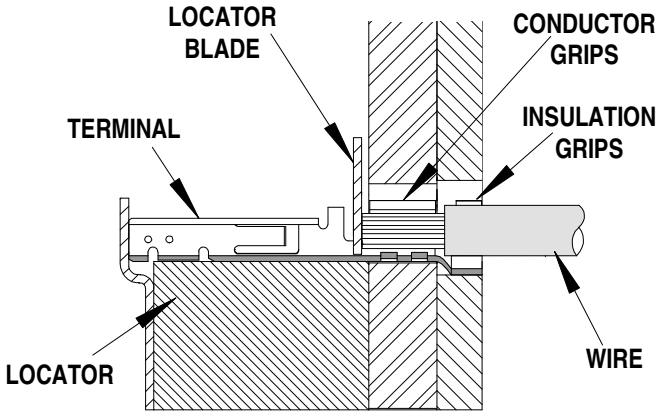

Figure 2

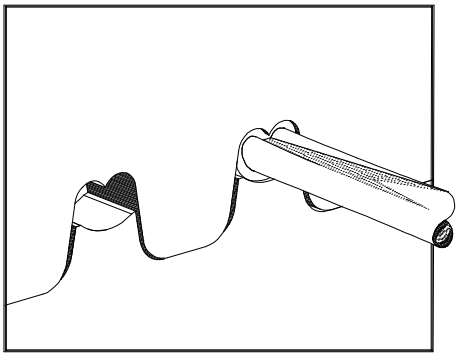

Figure 3

4. Close the tool until the ratchet releases. See Figure 4.
5. Lift the locator blade or wire stop up.
6. Carefully remove the crimped terminal.

Maintenance

It is recommended that each operator of the tool be made aware of, and responsible for, the following maintenance steps:

1. Remove dust, moisture, and other contaminants with a clean brush, or soft, lint free cloth.
2. Do not use any abrasive materials that could damage the tool.
3. Make certain all pins; pivot points and bearing surfaces are protected with a thin coat of high quality machine oil. Do not oil excessively.
4. When tool is not in use, keep the handles closed to prevent objects from becoming lodged in the crimping dies, and store the tool in a clean, dry area.

Miscrimps or Jams

Should this tool ever become stuck or jammed in a partially closed position, **Do Not** force the handles open or closed. The tool will open easily by lifting the ratchet release lever. See Figure 4.

How to Adjust Tool Crimp Force (See Figure 4)

It may be necessary over the life of the tool to adjust tool-crimping force. Listed below are the steps required to adjust the crimping force of the hand tool to obtain proper crimp conditions:

1. Remove the screw and washer. Located over the adjustment ring.
2. Lift the adjusting ring slightly, off of the locating pin.
3. Turn the adjusting ring in the desired direction (L= less force, T= more force) to increase or decrease crimp pressure.
4. Press the adjusting wheel flat against the tool and engage the locking pin.
5. Replace the washer and screw.
6. Check the crimp specifications after tool crimp force is adjusted.

Warranty

This tool is for electrical terminal crimping purposes only. This tool is made of the best quality materials. All vital components are long life tested. All tools are warranted to be free of manufacturing defects for a period of **30 days.** Should such a defect occur, we would exchange the tool free of charge. This will not be applicable to altered, misused, or damaged tools. This tool is designed for hand use only. Any clamping, fixturing, or use of handle extensions voids this warranty.

Hand held crimping tools are intended for low volume, prototyping, or repair requirements only.

Caution: Repetitive use of this tool should be avoided.

Notes:

1. This tool should only be used for the terminals and wire gauges specified on this sheet.
2. This tool is not adjustable for crimp height, however crimp force is adjustable (See instructions above). Variations in tools, terminals, wire stranding and insulation types may affect crimp height.
3. This tool is intended for standard conductor sizes. It may not give a good insulation crimp support for all insulation sizes.
4. Molex does not repair hand tools (see warranty above). The replacement parts listed are the only parts available for repair. If the handles or crimp tooling is damaged or worn, a new tool must be purchased.
5. Pull force should be used as the final criteria for an acceptable crimp. Pull force is measured with no influence from the insulation crimp. The insulation should be stripped long (1/2 in.) so the insulation grips on the terminal do not grip the wire insulation or the conductor. Refer to Molex Quality Crimping Handbook 63800-0029 for additional information on crimping and crimp testing.
6. Molex does not certify crimp hand tools.

CAUTION: Molex crimp specifications are valid only when used with Molex terminals, applicators and tooling.

PARTS LIST

Item Number	Order Number	Description	Quantity
1	63811-2875	Locator Assembly**	1
2	11-11-0324	Spring (Main)	1
3	11-11-0320	Spring (Ratchet)	1

** Not all tools are equipped with a locator or locator blade.

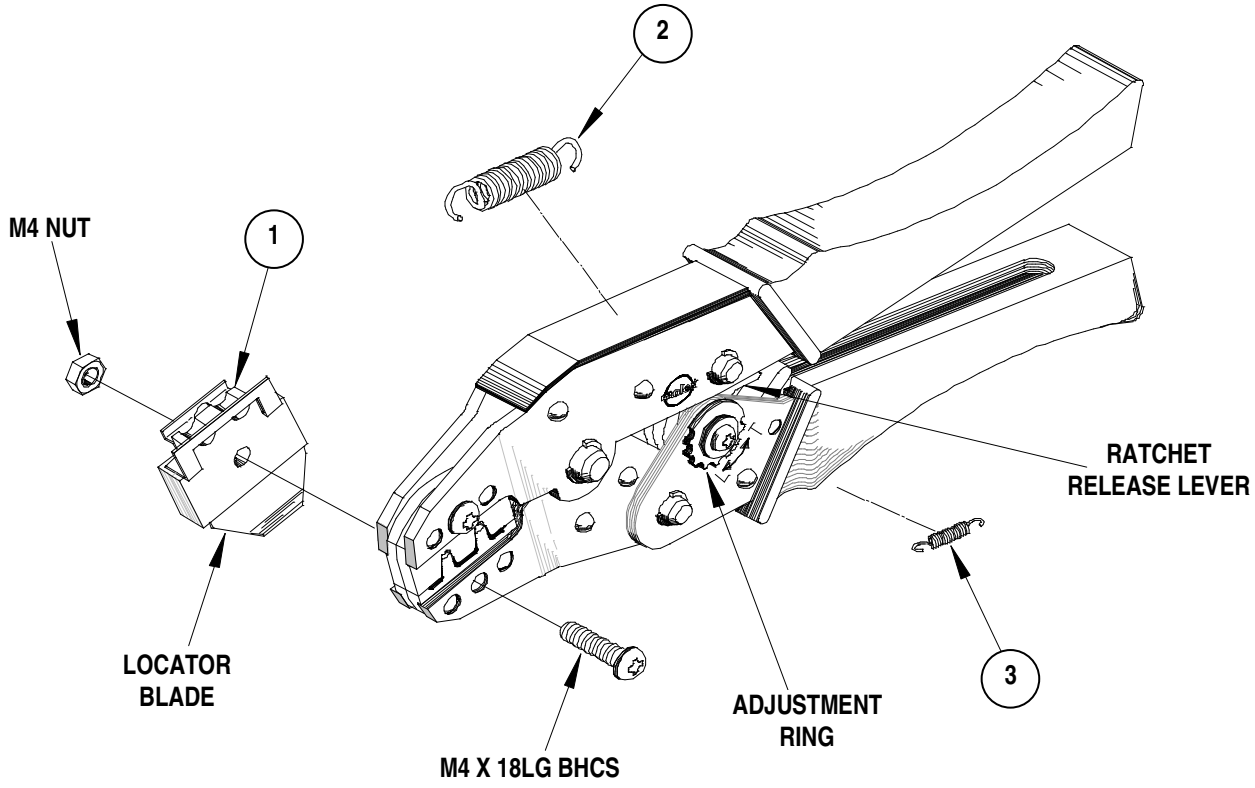

Figure 4

Americas Headquarters
Lisle, Illinois 60532 U.S.A.
1-800-78MOLEX
amerinfo@molex.com

Far East North Headquarters
Yamato, Kanagawa, Japan
81-462-65-2324
feninfo@molex.com

Far East South Headquarters
Jurong, Singapore
65-6-268-6868
fesinfo@molex.com

European Headquarters
Munich, Germany
49-89-413092-0
eurinfo@molex.com

Corporate Headquarters
2222 Wellington Ct.
Lisle, IL 60532 U.S.A.
630-969-4550
Fax: 630-969-1352

Visit our Web site at http://www.molex.com