

molex

Application Tooling Specification Sheet

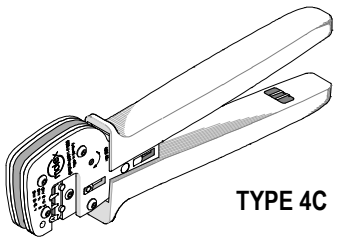

Tool Kit
Order No. 63811-5670

Hand Crimp Tool
Order No. 63811-5600

FEATURES

- A full cycle ratcheting hand tool ensures complete crimps
- Ergonomically designed soft handles
- Precisely designed crimping profiles with simple contact positioning
- Easy handling due to outstanding force ratio
- Tool kits are easily installed into the Hand Crimp Tool or the 63816-0300 Power Crimp Head which is installed into the 63816-0200 (110 V) or the 63816-0250 (220 V) Battery Powered Tool.
- Many different Tool kits can be used with a single Battery Powered Tool.
- This tool is IPC/WHMA-A-620 Class 2 and RoHS compliant.

SCOPE

Products: 4.64mm (.183") Crimp Terminal, Pin, 14-18 AWG.

Terminal Series No.	Terminal Order No.		Wire Size		Insulation Diameter		Strip Length	
	✳Available in Reel form only		AWG	mm²	mm	in	mm	in
84524	84524-0008	84524-0016	14	2.09	✳✳3.05-3.81	.120-.150		
			16	1.33	2.41-3.05	.095-.120	4.45	.175
			18	0.82	1.91-2.41	.075-.095		
84525	84525-0017	84525-0039	14	2.09	✳✳3.05-3.81	.120-.150		
			16	1.33	2.41-3.05	.095-.120	4.45	.175
			18	0.82	1.91-2.41	.075-.095		
84590	84590-0022 84590-0023 84590-0028	84590-0029 84590-0037 84590-0038	14	2.09	✳✳3.05-3.81	.120-.150	4.45	.175
			16	1.33	2.41-3.05	.095-.120		
			18	0.82	1.91-2.41	.075-.095		

✳Customer to cut off terminal from reel: 0.50mm (.020") maximum Cut-off Tab.
✳✳ IPC/WHMA-A-620 Class 2 only 3.05-3.40mm (.120-.134")

DEFINITION OF TERMS

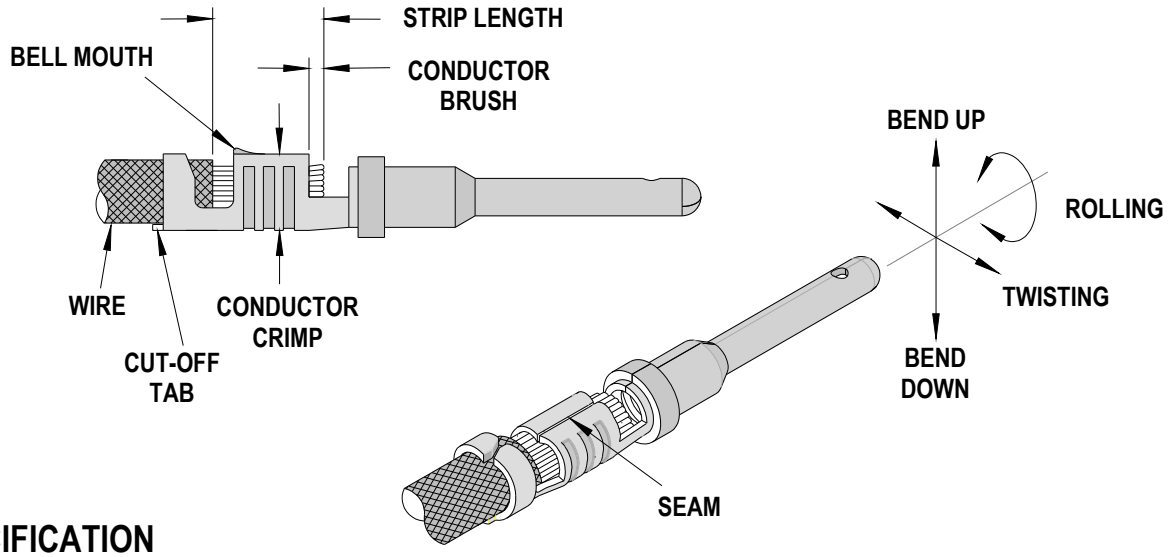

CRIMP SPECIFICATION

Terminal Series No.			Bell Mouth		Bend up Bend down		Twist Roll		Conductor Brush	
			mm	In.	Degree		Degree		mm	In.
84524	84525	84590	0.13-0.37	.005-.015	5	5	5	10	0.75-1.25	.030-.050
Seam Seam shall not be open and no wire allowed out of the crimping area										

CONDITIONS:

After crimping, the conductor profiles should measure the following (See notes below).

Terminal Series No.	Wire Size		Conductor				Pull Force Minimum		Profile		
			Crimp Height (Ref)		Crimp Width (Ref)						
	AWG	mm²	mm	in.	mm	in.	N	Lb.	14	16	18
84524	14	2.09	1.73-1.81	.068-.071	2.55	.100	111.2	25.0	X		
	16	1.33	1.48-1.56	.058-.061	2.55	.100	111.2	25.0		X	
	18	0.82	1.36-1.44	.054-.057	2.55	.100	111.2	25.0			X
84525	14	2.09	1.73-1.81	.068-.071	2.55	.100	111.2	25.0	X		
	16	1.33	1.48-1.56	.058-.061	2.55	.100	111.2	25.0		X	
	18	0.82	1.36-1.44	.054-.057	2.55	.100	111.2	25.0			X
84590	14	2.09	1.73-1.81	.068-.071	2.55	.100	111.2	25.0	X		
	16	1.33	1.48-1.56	.058-.061	2.55	.100	111.2	25.0		X	
	18	0.82	1.36-1.44	.054-.057	2.55	.100	111.2	25.0			X

Tool Qualification Notes:

1. Pull Force should be measured with no influence from the insulation crimp.
2. The above specifications are guidelines to an optimum crimp.

Note:
A crimp height chart is provided with this manual as Reference Only. Due to the wide range of wires, strands, insulation diameters, and durometers, actual crimp height measurements may very slightly. An occasional, destructive, pull force test should be preformed to check hand tool crimp. Pull Force value must exceed the minimum pull force specifications listed.

CAUTION: Install only Molex terminals listed above with this tool. Do not crimp hardened objects as damage can occur to the tool or die.

INSTALLATION

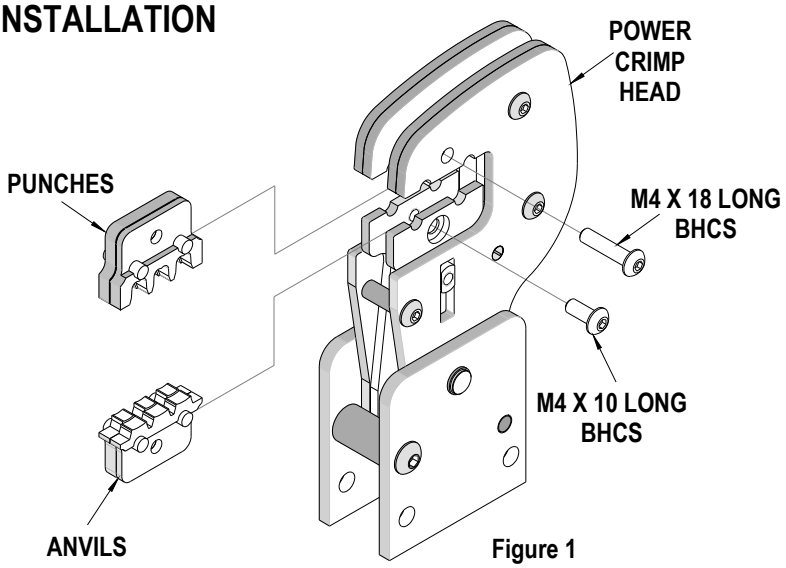

Figure 1

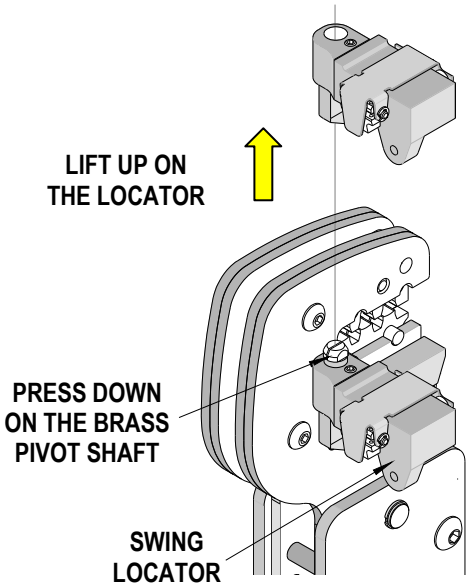

Figure 2

To install the Tool Kit into the Power Crimp Head follow the steps below:

Anvils and Punches Installation

1. Insert the Anvils into the bottom slots of the nest. Install the M4 x 10 long BHCS and tighten in place.
2. Insert the Punches into the top slots of the nest. Install the M4 x 18 long BHCS and tighten in place. See Figure 1.

Locator Installation and Removal

Follow the steps below to install or replace the locator. See Figure 2.

To install the locator

1. Position the locator with the hole over the brass pivot shaft and snap it into place.

To remove the locator

1. Open the crimp hand tool.
2. Swing the existing locator open and away from the hand tool.

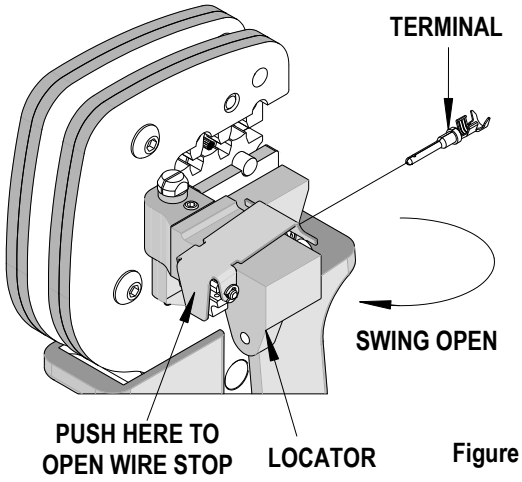

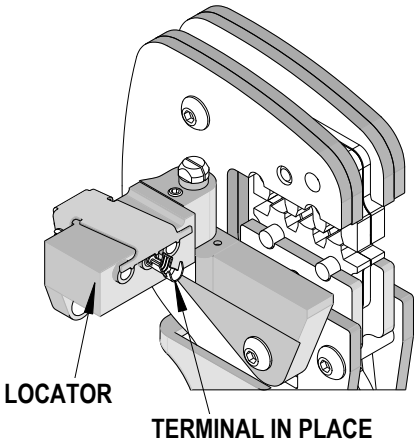

Figure 3

3. Firmly press down on the brass pivot shaft with your thumb, while pulling the locator up. Slip the locator off the top of the brass pivot shaft.

OPERATION

Open the tool by squeezing the handles together, at the end of the closing stroke, the ratchet mechanism will release the handles, and the hand tool will spring open.

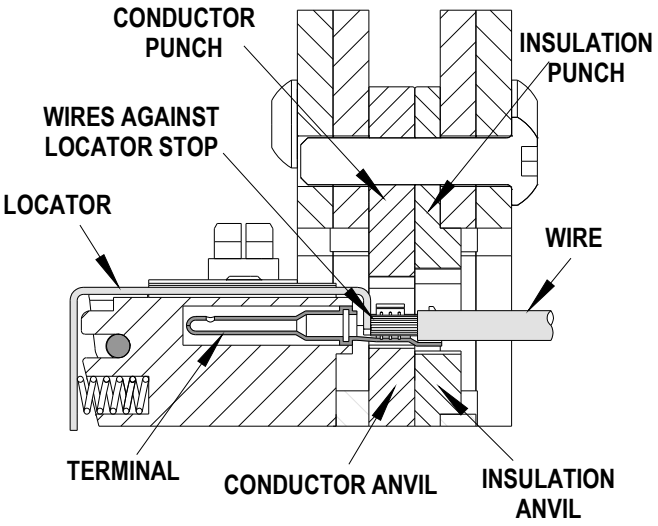

Figure 4

Crimping Terminals

1. Select the desired terminal listed in the preceding charts.
2. Swing the terminal locator away from the crimp tool shown in Figure 3. Some terminals with large insulation grips may interfere with the crimp tooling when swinging the locator into position. The terminal must then be loaded into the locator in the closed crimp position. See Figure 4.
3. Press down on the wire stop on the locator as shown in Figure 5. Insert the proper terminal into the proper nest opening. Make sure when choosing the nest opening, it will correspond with the 14, 16, or 18 profile on the hand tool. See Figure 4.
4. Return the locator to its original position.
5. Insert the proper wire over the terminal. Gently touch the wire stop with the end of the wire. See Figure 5 and 6.
6. Compress the terminal by squeezing the tool handles until the ratchet mechanism cycle has been completed. Release handles to open the jaws.

Note: The tamper proof ratchet action will not release the tool until it has been fully closed.

7. Remove the crimped terminal from the terminal locator by pressing down on the wire stop and gently pulling on the wire. The terminal locator can be in either position.
8. Visually inspect the crimped terminal for proper crimp location.

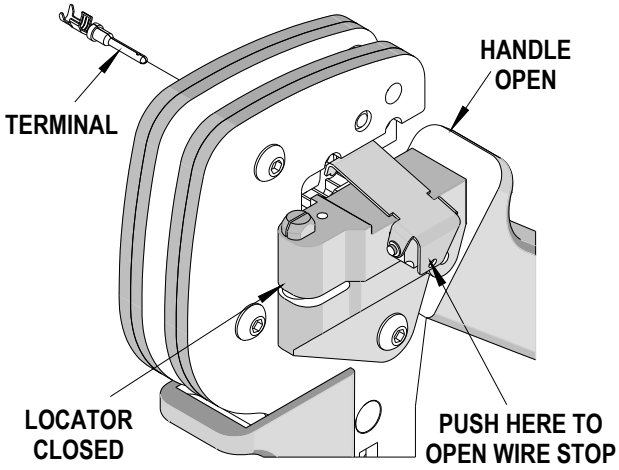

Figure 5

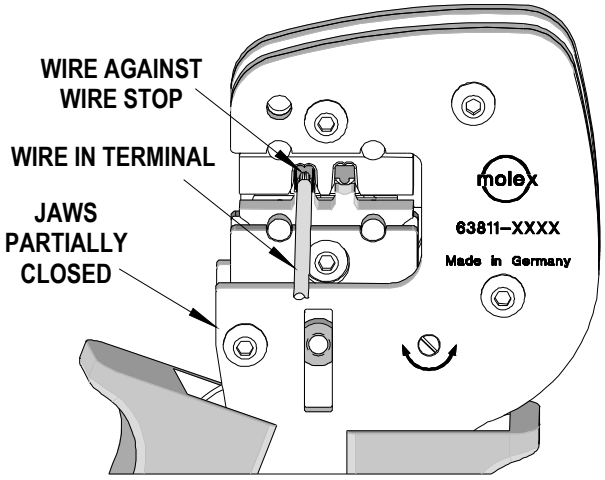

Figure 6

For the Battery Power Tool:

1. Cycle the Battery Power Tool to crimp the terminal to the wire.
2. Remove the crimped terminal from the terminal locator by pressing down on the wire stop and gently pulling on the wire. The terminal locator can be in either position.
3. Visually inspect the crimped terminal for proper crimp location.

Maintenance

It is recommended that each operator of the tool be made aware of, and responsible for, the following maintenance steps:

1. Remove dust, moisture and other contaminants with a clean brush, or soft, lint-free cloth.
2. Do not use any abrasive materials that could damage the tool.
3. Make certain all pins; pivot points and bearing surfaces in the tool head are protected with a thin coat of high quality machine oil. Do not oil excessively. This tool was engineered for durability, but like any fine piece of equipment, it needs cleaning and lubrication for a maximum service life of trouble-free crimping. The use of light oil, such as 30 weight automotive oil, every 5,000 crimps or monthly, will significantly enhance the tool life and ensure a stable calibration. See Figure 7A or 7B for lubrication points.
4. Store the tool in a clean and dry area when not in use.

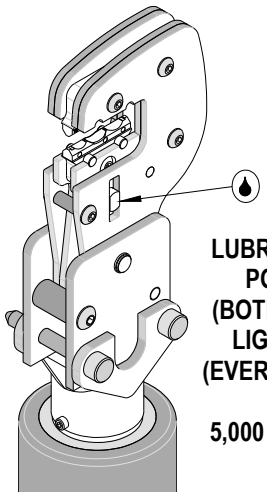

Figure 7A

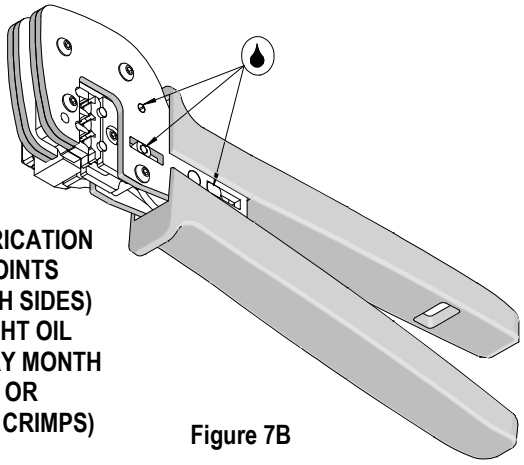

Figure 7B

Miscrimps or Jams for Crimp Hand Tools Only

(See Figure 10

Should this tool ever become stuck or jammed in a partially closed position, **Do Not** force the handles open or closed. The tool will open easily by rotating the small slotted screw marked with an arrow. See Figure 10.

Warranty

This tool kit is for electrical terminal crimping purposes only. This tool kit is made of the best quality materials. All vital components are long life tested. All tools are warranted to be free of manufacturing defects for a period of 30 days. Should such a defect occur, we will repair or exchange the tool kit free of charge. This repair or exchange will not be applicable to altered, misused, or damaged tools.

CAUTION: Molex crimp specifications are valid only when used with Molex terminals and tooling.

CAUTIONS

1. Manually powered hand tools are intended for low volume or field repair. This tool is NOT intended for production use. Repetitive use of this tool should be avoided.
2. Insulated rubber handles are not protection against electrical shock.
3. Wear eye protection at all times.
4. Use only the Molex terminals specified for crimping with this tool.

CAUTION: Repetitive use of this tool should be avoided.

Certification

Molex does not certify or re-certify commercial grade hand tools but rather supplies the following guidelines for customers to re-certify hand tools.

- This tool is qualified to pull force only. To re-certify, crimp a terminal to a wire, which has been stripped 12.7mm (1/2") long, so there is no crimping of the insulation. Pull the terminal and wire at a rate no faster than 25mm (1.00") per minute. See the Molex web site for the Quality Crimp Handbook for more information on pull testing.
- When the hand tool is no longer capable of achieving minimum pull force, it should be taken out of service and replaced.
- This tool is very difficult to disassemble and reassemble. Customer repair is not recommended.

The chart below shows all applications for this Tool Kit.

Tool Kit Order No.	Tool Order no.	Tool Description	Power Head Order No.	Adapter Description	Figure No.
63811-5670	63810-1050	Hand Crimp Frame (Short)	N/A	N/A	8
	63810-1000	Hand Crimp Frame (Long)	N/A	N/A	8
	63816-0200	Battery Power Tool (110 V)	63816-0300	Power Crimp Head	9
	63816-0250	Battery Power Tool (220 V)	63816-0300	Power Crimp Head	9

Applications for the Tool Kit

Hand Crimp Tool

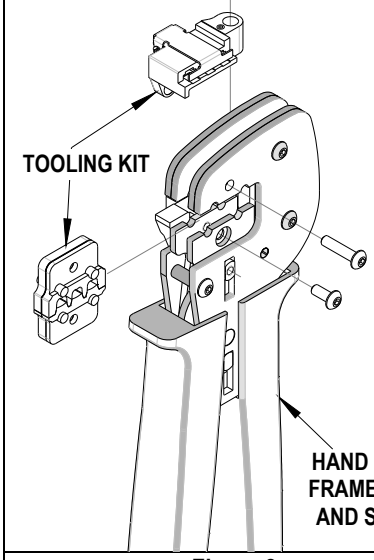

Figure 8

Battery Powered Tool

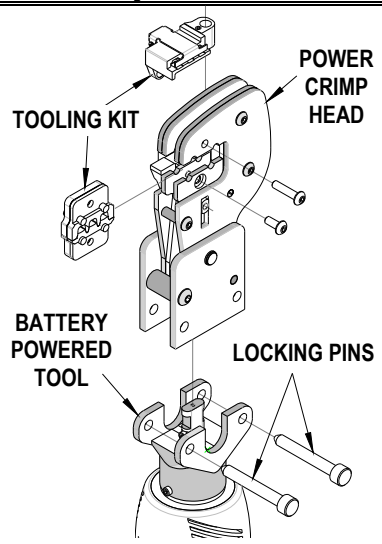

Figure 9

WARNING: *NEVER* operate service, install tool kits, or adjust the Power Crimp Head without proper instruction and without first reading and understanding the instructions in the proper Manual or Specification Sheet. See Chart above for the correct Manual or Specification Sheet.

WARNING: *NEVER* install tooling or service this tool while it is into any power source. Make sure the power is turned off.

CAUTION: Keep fingers away from the crimping area when operating this tool. It may cause severe injury.

CAUTION: Wear safety glasses when operating or serving this tool.

HAND TOOL PARTS LIST

Item Number	Order Number	Description	Quantity
1	63810-1000	Hand Crimp Frame (Long)	1
2	63811-5670	Tool Kit with Locator	1
3	63811-5573	Locator Base	1
4	63811-5675	Locator (only)	REF

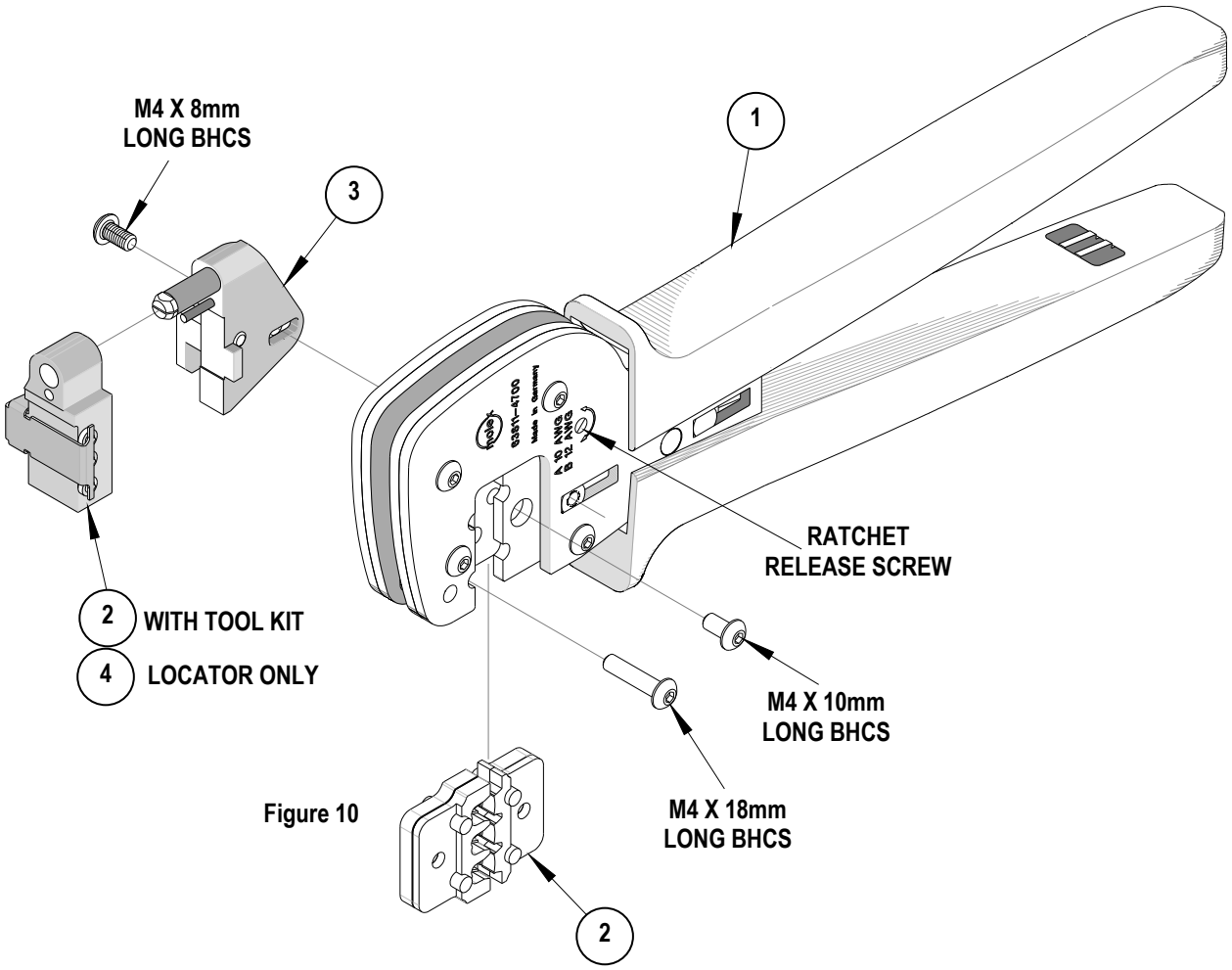

Figure 10

POWER HEAD PARTS LIST

Item	Order No	Engineering No.	Description	Quantity
1	63816-0300	63816-0300	Power Crimp Head	1
2	63811-5670	63811-5670	Tool Kit	1

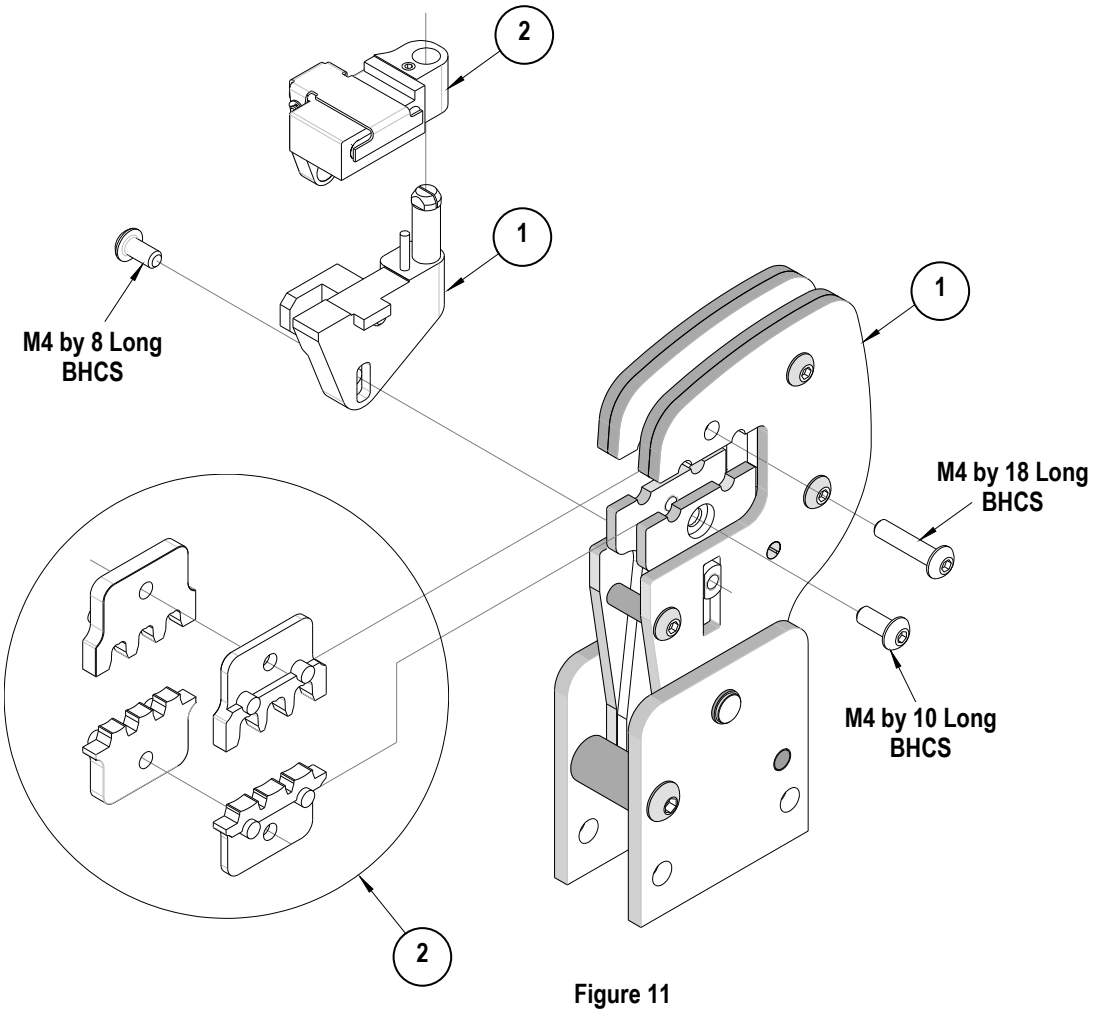

Figure 11

http://www.molex.com