# Hand Crimp Tool Specification Sheet Order No. 63811-6000

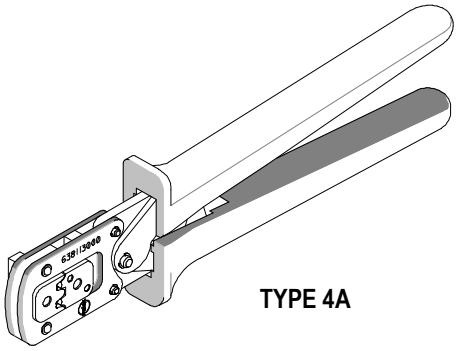

TYPE 4A

## FEATURES

- A full cycle ratcheting hand tool ensures complete crimps
- Ergonomically designed soft handles
- Precisely designed crimping profiles with simple contact positioning
- Easy handling due to outstanding force ratio

## SCOPE

Products: 1.50mm (.591") Pitch, MX150™ Receptacle Female Crimp Terminals, 18-22 AWG.

| Terminal Series No. | Terminal Order No. ●Reel | | | | Wire Size AWG | Wire Size mm² | Insulation Diameter mm | Insulation Diameter In. | Strip Length mm | Strip Length In. |
|---|---|---|---|---|---|---|---|---|---|---|
| 33001 | 33001-2004 | 33001-2022 | 33001-4002 | 33001-5002 | 18 | 0.83 | 1.91-2.06 | .075-.081 | 4.70-5.60 | .185-.220 |
| | 33001-3004 | 33001-3022 | 33001-4022 | 33001-5022 | 20 | 0.58 | 1.70-1.85 | .067-.073 | 4.70-5.60 | .185-.220 |
| | 33001-2005 | 33001-2023 | 33001-3005 | 33001-3023 | 22 | 0.36 | 1.50-1.65 | .059-.065 | 4.70-5.60 | .185-.220 |
| | 33001-4003 | 33001-4023 | 33001-5003 | 33001-5023 | | | | | | |
| 33012 | 33012-2002 | 33012-2022 | 33012-3002 | 33012-3022 | 18 | 0.83 | 1.91-2.06 | .075-.081 | 4.70-5.60 | .185-.220 |
| | | | | | 20 | 0.58 | 1.70-1.85 | .067-.073 | 4.70-5.60 | .185-.220 |
| | 33012-2003 | 33012-2023 | 33012-3003 | 33012-3023 | 22 | 0.36 | 1.50-1.65 | .059-.065 | 4.70-5.60 | .185-.220 |
| 34750 | 34750-0002 | 34750-1002 | | | 18 | 0.83 | 1.91-2.06 | .075-.081 | 4.70-5.60 | .185-.220 |
| | | | | | 20 | 0.58 | 1.70-1.85 | .067-.073 | 4.70-5.60 | .185-.220 |
| | 34750-0003 | 34750-1003 | | | 22 | 0.36 | 1.50-1.65 | .059-.065 | 4.70-5.60 | .185-.220 |

●Customer to cut off terminal from reel: 0.50mm (.020") maximum Cut-off Tab.
Terminals were validated per USCAR-21 using the following wire specifications:
M1L-123A (TXL), M1L-135A1 (UTX), and M1L-126A1 (metric-TXL).
Customers are required to complete validation testing if tooling purchased outside Molex Inc.
and / or wire specifications are different than above.

## DEFINITION OF TERMS

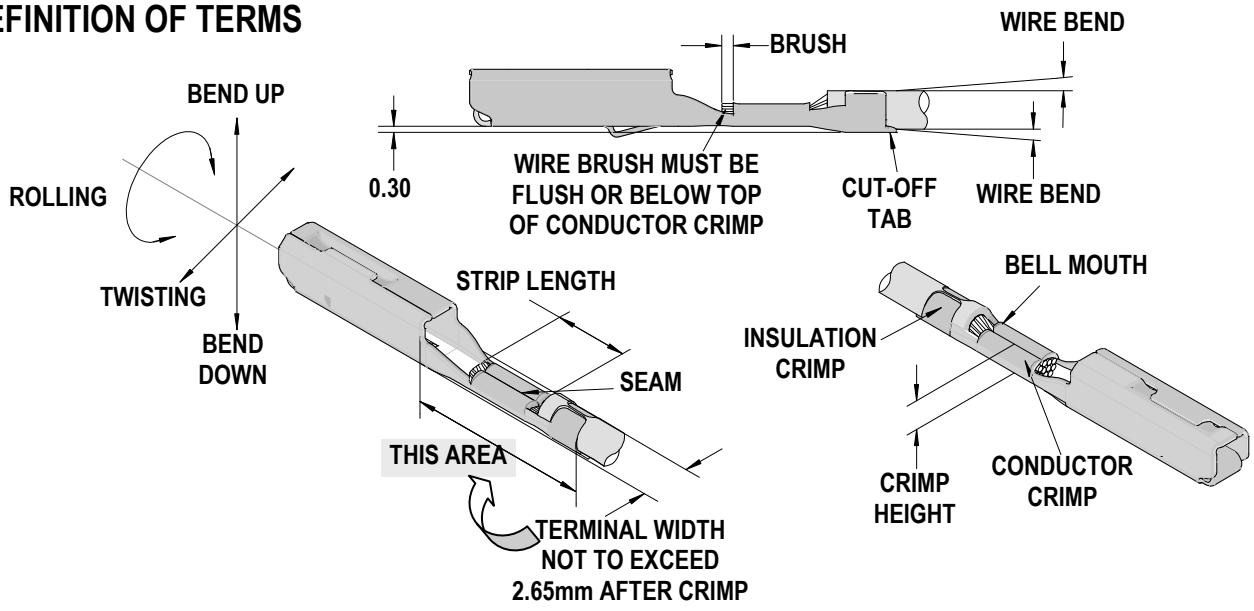

## CRIMP SPECIFICATION

| Terminal Series No. | Bell mouth | | ✦Conductor Brush | |
|---|---|---|---|---|
| | mm | In. | mm | In. |
| 33001 | 0.25-1.25 | .010-.049 | 0.15-0.40 | .006-.016 |
| 33012 | 0.25-1.25 | .010-.049 | 0.15-0.40 | .006-.016 |
| 34750 | 0.25-1.25 | .010-.049 | 0.15-0.40 | .006-.016 |
| ✦Wire brush to be below top of conductor crimp. | | | | |

| Terminal Series No. | Bend up Bend down | Twist Roll | Seam |
|---|---|---|---|
| | Degree | Degree | |
| 33001<br>33012<br>34750 | ✖ Crimped terminals and up to 5mm of wire past the insulator cutoff tab must freely fit in the Checking Aid, Part No. 63868-2008 | | Seam shall not be open and no wire allowed out of the crimping area |

✖Order Separately

After crimping, the crimp profiles should measure the following:

| Terminal Series No. | Wire Size | | Conductor | | | | Profile AWG | | |
|---|---|---|---|---|---|---|---|---|---|
| | | | Crimp Height | | Crimp Width | | | | |
| | AWG | mm² | mm | In. | mm | In. | 18 | 20 | 22 |
| 33001 | 18 | 0.83 | 1.20-1.30 | .047-.051 | 2.05-2.25 | .081-.089 | X | | |
| | 20 | 0.58 | 1.10-1.20 | .043-.047 | 2.05-2.25 | .081-.089 | | X | |
| | 22 | 0.36 | 0.95-1.05 | .037-.041 | 1.50-1.70 | .059-.067 | | | X |
| 33012 | 18 | 0.83 | 1.20-1.30 | .047-.051 | 2.05-2.25 | .081-.089 | X | | |
| | 20 | 0.58 | 1.10-1.20 | .043-.047 | 2.05-2.25 | .081-.089 | | X | |
| | 22 | 0.36 | 0.95-1.05 | .037-.041 | 1.50-1.70 | .059-.067 | | | X |
| 34750 | 18 | 0.83 | 1.20-1.30 | .047-.051 | 2.05-2.25 | .081-.089 | X | | |
| | 20 | 0.58 | 1.10-1.20 | .043-.047 | 2.05-2.25 | .081-.089 | | X | |
| | 22 | 0.36 | 0.95-1.05 | .037-.041 | 1.50-1.70 | .059-.067 | | | X |

| Terminal Series No. | Wire Size | | Insulation | | | | Pull Force Minimum | |
|---|---|---|---|---|---|---|---|---|
| | | | Crimp Height | | Crimp Width | | | |
| | AWG | mm² | mm | In. | mm | In. | N | Lb. |
| 33001 | 18 | 0.83 | 1.90-2.10 | .075-.083 | 2.20-2.40 | .086-.094 | 89.9 | 20.2 |
| | 20 | 0.58 | 1.80-2.00 | .071-.079 | 2.00-2.20 | .079-.087 | 75.6 | 17.0 |
| | 22 | 0.36 | 1.75-1.95 | .069-.077 | 1.80-2.00 | .071-.079 | 49.8 | 11.2 |
| 33012 | 18 | 0.83 | 1.90-2.10 | .075-.083 | 2.20-2.40 | .086-.094 | 89.9 | 20.2 |
| | 20 | 0.58 | 1.80-2.00 | .071-.079 | 2.00-2.20 | .079-.087 | 75.6 | 17.0 |
| | 22 | 0.36 | 1.75-1.95 | .069-.077 | 1.80-2.00 | .071-.079 | 49.8 | 11.2 |
| 34750 | 18 | 0.83 | 1.90-2.10 | .075-.083 | 2.20-2.40 | .086-.094 | 89.9 | 20.2 |
| | 20 | 0.58 | 1.80-2.00 | .071-.079 | 2.00-2.20 | .079-.087 | 75.6 | 17.0 |
| | 22 | 0.36 | 1.75-1.95 | .069-.077 | 1.80-2.00 | .071-.079 | 49.8 | 11.2 |

T Tool Qualification Notes:

1. Pull Force should be measured with no influence from the insulation crimp.
2. The above specifications are guidelines to an optimum crimp.

## OPERATION

Open the tool by squeezing the handles together, at the end of the closing stroke, the ratchet mechanism will release the handles, and the hand tool will spring open.

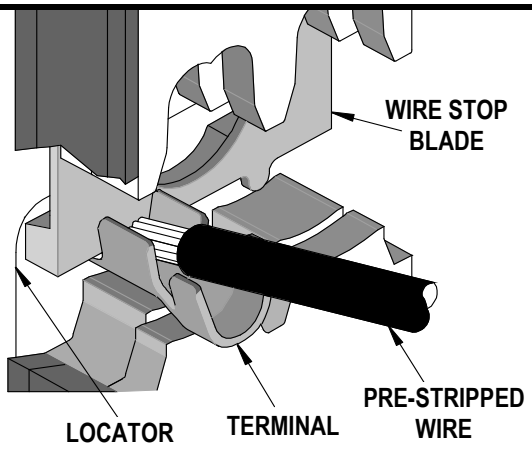


Figure 1

### Crimping Terminals

1. Lift the wire stop blade up.
2. Insert the terminal fully into the correct die profile and the locator slot until the terminal is fully seated and stops.
3. Push down the wire stop blade. Make sure the wire stop blade is fully seated on the terminal behind the conductor grip section.
4. Slide the pre-stripped wire into the terminal; make sure to aim the wire end towards the tip point on the wire stop blade. See Figure 1. Align the wire so that it is parallel to, and sitting into the terminal. Maintain a light and constant pressure on the wire that is seated in the terminal at all times. (Do not let go of the wire.) Be sure to hold the wire and terminal in place until the terminal is fully crimped. See Figure 2.

**CAUTION:** Pushing the wire against the Wire Stop Blade with too much force can cause wire strands to bend up and above the top of the conductor crimp. If this occurs, depress strands below the top of the conductor crimp to prevent matte seal damage.

5. Close the tool until the ratchet releases.
6. Carefully remove the crimped terminal.

**Note:** To maintain good brush control and a consistent bell mouth the crimping instructions must be followed.

## Maintenance

It is recommended that each operator of the tool be made aware of, and responsible for, the following maintenance steps:

1. Remove dust, moisture, and other contaminants with a clean brush, or soft, lint free cloth.
2. Do not use any abrasive materials that could damage the tool.
3. Make certain all pins; pivot points and bearing surfaces are protected with a thin coat of high quality machine oil. Do not oil excessively.
4. When tool is not in use, keep the handles closed to prevent objects from becoming lodged in the crimping dies, and store the tool in a clean, dry area.

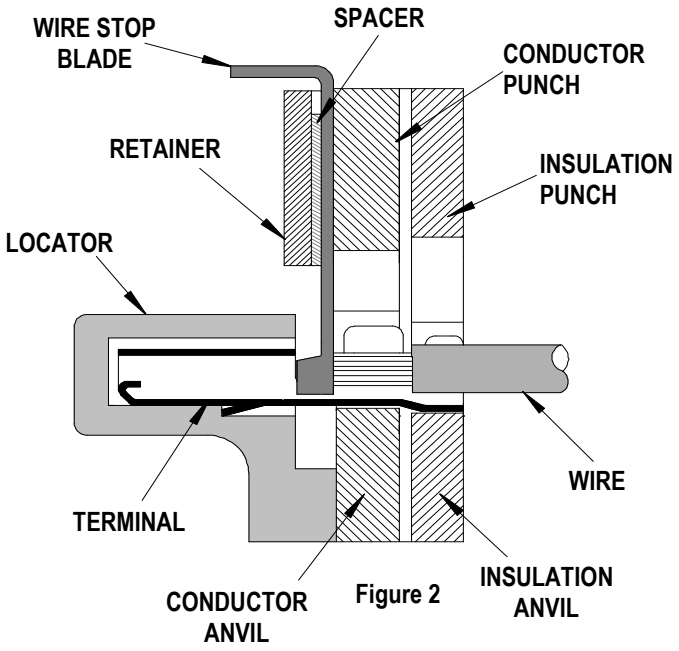


Figure 2

## Miscrimps or Jams (See Figure 3)

Should this tool ever become stuck or jammed in a partially closed position, **Do Not** force the handles open or closed. The tool will open easily by pushing the ratchet release lever.

## Warranty

This tool is for electrical terminal crimping purposes only. This tool is made of the best quality materials. All vital components are long life tested. All tools are warranted to be free of manufacturing defects for a period of **30 days.** Should such a defect occur, we would exchange the tool free of charge. This will not be applicable to altered, misused, or damaged tools. This tool is designed for hand use only. Any clamping, fixturing, or use of handle extensions voids this warranty.

Hand held crimping tools are intended for low volume, prototyping, or repair requirements only.

**CAUTION:** Repetitive use of this tool should be avoided.

## Notes:

1. This tool should only be used for the terminals and wire gauges specified on this sheet.
2. This tool is not adjustable. Variations in tools, terminals, wire stranding and insulation types may affect crimp height.
3. This tool is intended for standard conductor sizes. It may not give a good insulation crimp support for all insulation sizes.
4. Molex does not repair hand tools (see warranty above) The replacement parts listed are the only parts available for repair. If the handles or crimp tooling is damaged or worn, a new tool must be purchased.
5. Pull force should be used as the final criteria for an acceptable crimp. Pull force is measured with no influence from the insulation crimp. The insulation should be stripped long (1/2 in.) so the insulation grips on the terminal do not grip the wire insulation or the conductor. Refer to Molex Quality Crimping Handbook 63800-0029 for additional information on crimping and crimp testing.
6. Molex does not certify crimp hand tools.

**CAUTION**: Molex crimp specifications are valid only when used with Molex terminals, applicators and tooling.

## PARTS LIST

| Item Number | Order Number | Description | Quantity |
|---|---|---|---|
| 1 | 63600-0520 | Crimping Spring | 2 |
| 2 | 63811-6075 | Locator | 1 |
| 3 | 63600-0525 | Handle Spring | 1 |

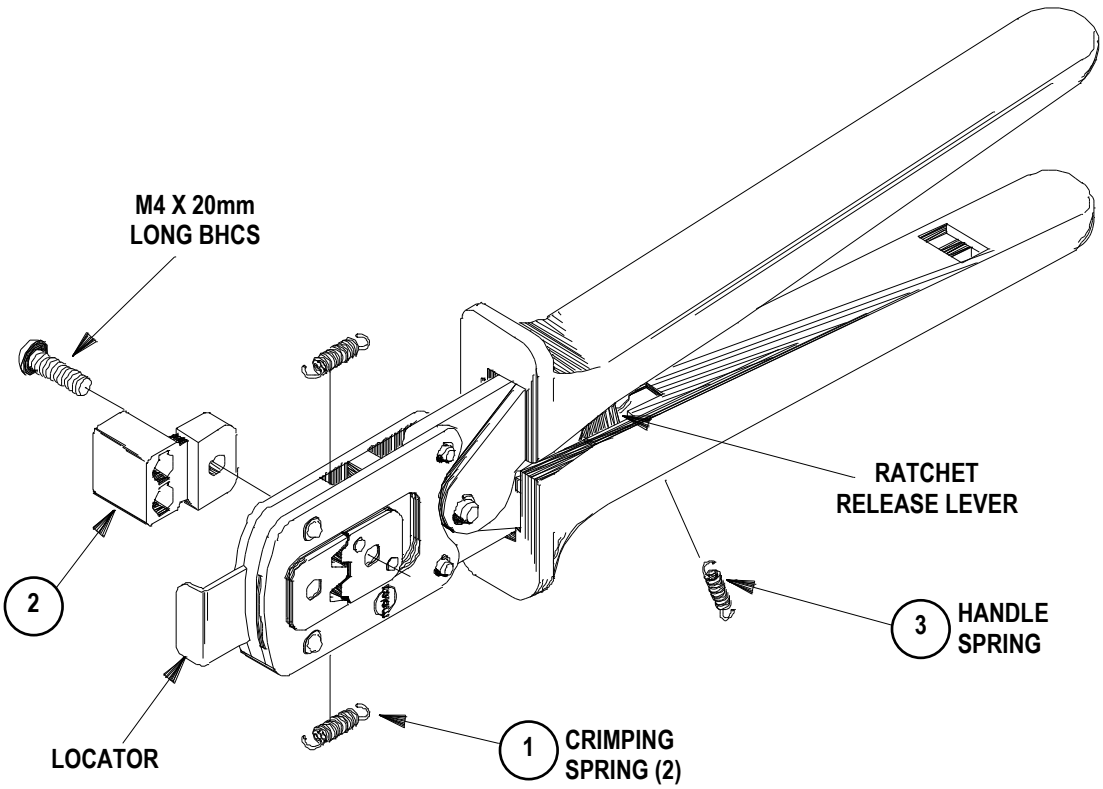


**Figure 3**

Americas Headquarters
Lisle, Illinois 60532 U.S.A.
1-800-78MOLEX
amerinfo@molex.com

Far East North Headquarters
Yamato, Kanagawa, Japan
81-462-65-2324
feninfo@molex.com

Far East South Headquarters
Jurong, Singapore
65-6-268-6868
fesinfo@molex.com

European Headquarters
Munich, Germany
49-89-413092-0
eurinfo@molex.com

Corporate Headquarters
2222 Wellington Ct.
Lisle, IL 60532 U.S.A.
630-969-4550
Fax: 630-969-1352

Visit our Web site at http://www.molex.com