HAND CRIMP TOOL

molex

Application Tooling Specification Sheet

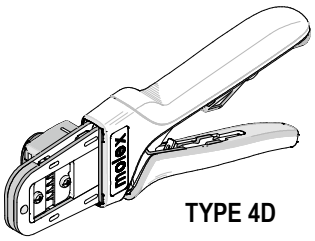

Order No. 63811-7900

FEATURES

- A full cycle ratcheting hand tool ensures complete crimps
- Ergonomic soft grip handles for comfortable crimping
- A precision user-friendly terminal locator wire stop holds terminals in the proper crimping position
- Right and Left handed applications
- Dies and Locator from this tool can be used in the Battery Powered Tool Order No.63816-0200 (110 V) or 63816-0250 (220 V), with the use of the 63816-0800 Crimp Head
- Many different tool kits can be used with a single Battery Powered Crimp Tool
- This tool is RoHS compliant, however RoHS compliant is not required

SCOPE

Products: 1.25mm (.049") Pitch Dual Wire-to-Board and PanelMate™ Wire-to-Board Crimp Terminals, 28-32 AWG.

Terminal Series No.	Terminal Order No.				Wire Size		Insulation Diameter		Strip Length	
	Loose Piece	✳Reel			AWG	mm²	mm	In.	mm	In.
50516		50516-8031	50516-8041	50516-8099	28-32	0.08-0.03	0.50-1.00	.020-.040	1.20-1.70	.047-.067
50641	50641-8141	50641-8041	50641-8052	50641-8099	28-30	0.08-0.05	0.50-0.90	.020-.035	1.30-1.70	.051-.067
50753	50753-8141	50753-8041	50753-8099		30-32	0.05-0.03	0.40-0.55	.016-.022	1.30-1.70	.051-.067
✳Follow the Cut-Off Tab specifications on Applicator specification sheets.										

DEFINITION OF TERMS

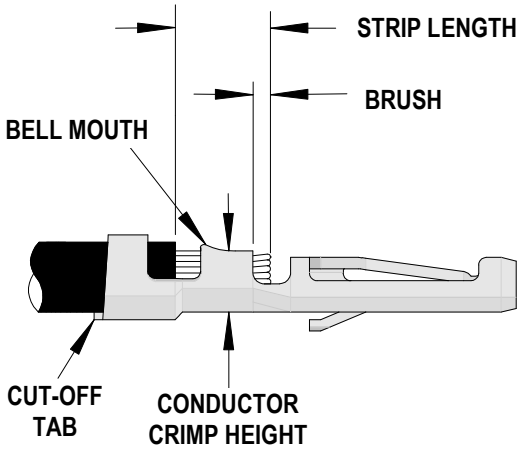

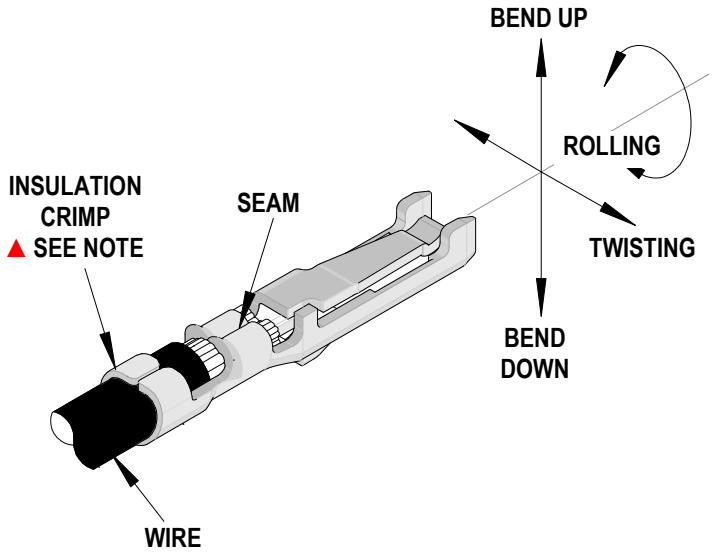

▲ Insulation Crimp Note:
Due to the terminal's insulation grip design and/or insulation diameter range, this tool uses "overlap" form geometry in the insulation punch. This produces an overlap insulation crimp (A620 – compliant). While the insulation punch profile may appear "lopsided", this is a normal condition for this tool. See figure to the right. (Some tools with multiple crimp pockets may not have the "overlap" profile on all pockets).

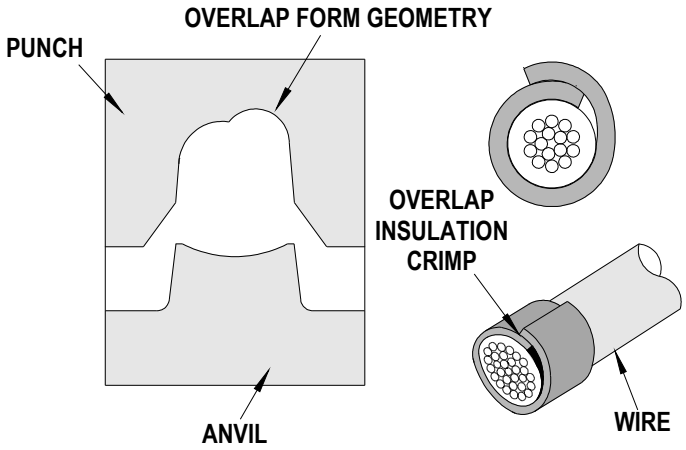

CONDITIONS:

After crimping, the conductor profiles should measure the following.

Terminal Series No	Wire Size		Conductor Crimp				Insulation Crimp				Pull Force Minimum		Profile			
			Height (Ref.)		Width (Ref.)		Height (Ref.)		Width (Ref.)				50516		50641	50753
	AWG	mm²	mm	In.	mm	In.	mm	In.	mm	In.	N	Lb.	28	30-32	28-30	30-32
50516	28	0.08	0.47-0.57	.019-.022	0.86	.034	1.10	.043	0.92	.036	9.8	2.20	X			
	30	0.05	0.44-0.54	.017-.021	0.85	.033	1.08	.042	0.92	.036	4.9	1.10		X		
	32	0.03	0.44-0.54	.017-.021	0.85	.033	1.08	.042	0.92	.036	3.0	0.67		X		
50641	28	0.08	0.50-0.60	.020-.023	0.86	.034	1.19	.047	0.92	.036	9.8	2.20			X	
	30	0.05	0.50-0.60	.020-.023	0.85	.033	1.15	.045	0.92	.036	4.9	1.10			X	
50753	30	0.05	0.47-0.57	.019-.022	0.84	.033	0.68	.027	0.80	.031	4.9	1.10				X
	32	0.03	0.47-0.57	.019-.022	0.83	.032	0.68	.027	0.80	.031	2.9	0.66				X

Tool Qualification Notes:
1. Pull Force should be measured with no influence from the insulation crimp.
2. The above specifications are guidelines to an optimum crimp

Note:
A crimp height chart is provided with this document as Reference Only. Due to the wide range of wires, strands, insulation diameters, and durometers available, actual crimp height measurements may very slightly. An occasional, destructive, pull force test should be performed to check hand tool crimp. Pull Force value Must exceed the Minimum pull force specifications listed.

OPERATION

CAUTION: Install only Molex terminals listed above with this tool. Do not crimp hardened objects as damage can occur to the tool or die.

Open the tool by squeezing the handles together. At the end of the closing stroke, the ratchet mechanism will release the handles and the hand tool will spring open. See Figure 1.

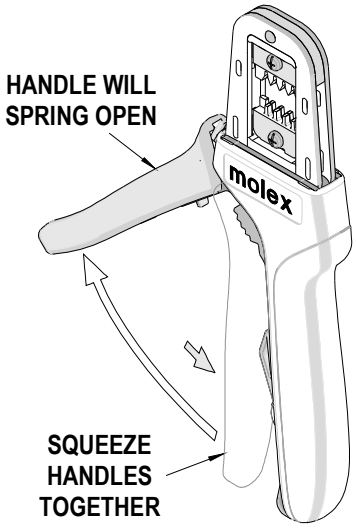

Figure 1

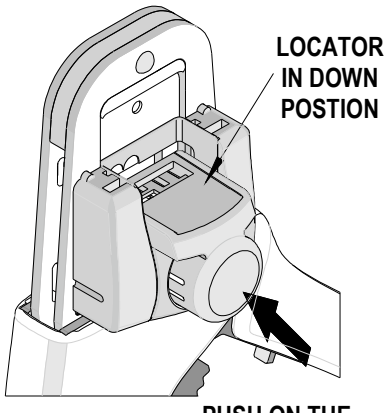

Figure 2

Crimping Terminals

1. Select the desired terminal listed in the preceding charts.
2. Make sure the center of the locator is in the down position. With the locator attached, push the locator button on the back of the hand tool to bring the locator forward through the tooling. See Figure 2.
3. While holding the locator button in, load the terminal into the proper nest opening in the locator based on the wire gauge or terminal type markings on the hand tooling. See Figure 3.

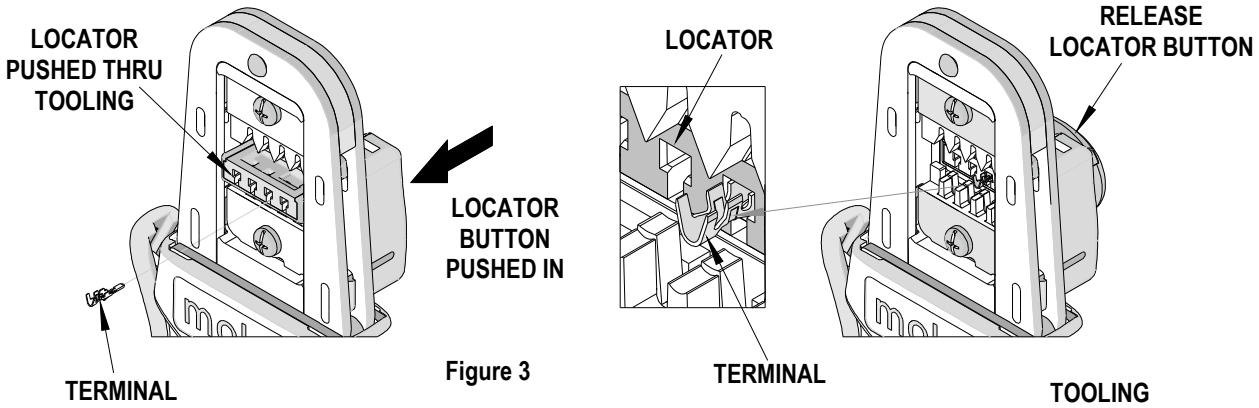

Figure 3

4. Release the locator button, allowing the locator to return to the crimping position.
5. Close the tool handle until the first ratchet position engages. See Figure 4.
6. Insert the properly stripped wire through the terminal and against the wire stop. See Figure 5.
7. Crimp the terminal by squeezing the tool handles until the ratchet mechanism cycle has been completed. Release the handles to open the jaws.

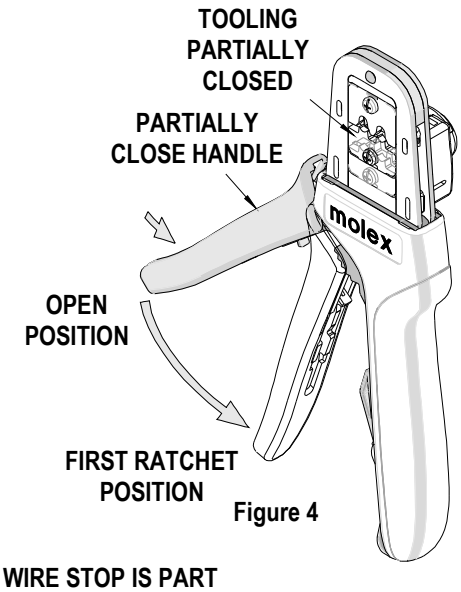

Figure 4

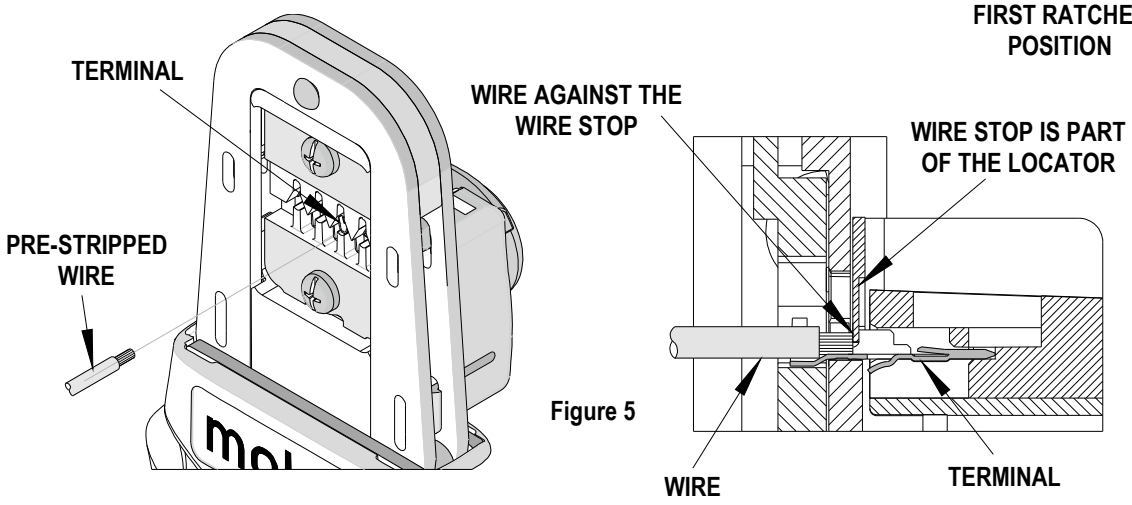

Figure 5

Note: The tamper proof ratchet action will not release the tool until it has been fully closed.

8. Remove the crimped terminal from the terminal locator by pulling on the wire.
9. Visually inspect the crimped terminal for proper crimp location.
10. On some large O.D. wires, it may not be possible to insert the wire with the tool partially closed. Those wires should be inserted with the hand tool in the open position. Insert the wire above the terminal in the punch and against the wire stop then close the tool. See Figure 6.

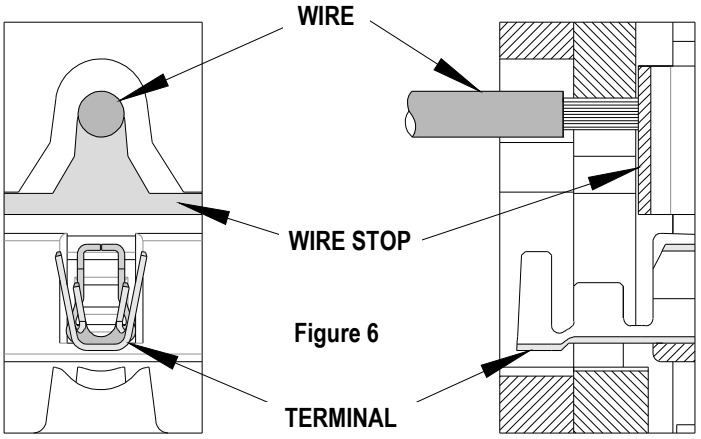

Figure 6

Locator Replacement

See the parts list on the last page of this document for the proper locator order number. Follow the steps below to replace the locator.

1. Open the crimp hand tool.
2. Squeeze gently on the lower area shown in Figure 7A with your thumb and index finger. The lower tabs of the locator should disengage from the hand tool.
3. Lift and pull away from the hand tool. The top locator hooks should slip out of the top slots easily. See Figure 7A.
4. To reinstall the new locator, make sure the hand tool is in the open position.
5. Press the red insert down as far as it will go as shown in Figure 7B.
6. Holding onto the lower part of the locator with your thumb and index finger, insert the locators top hooks (2) into the hand tool top slots.
7. Rotate the locator down and press the lower tabs into the two bottom slots of the hand tool. To secure the locator into place, the lower tabs must snap into place on the hand tool frame.

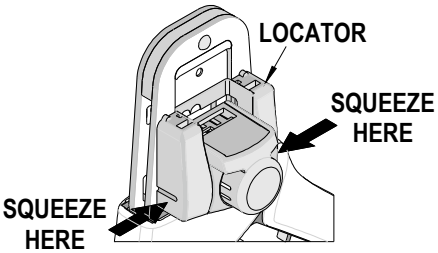

Figure 7A

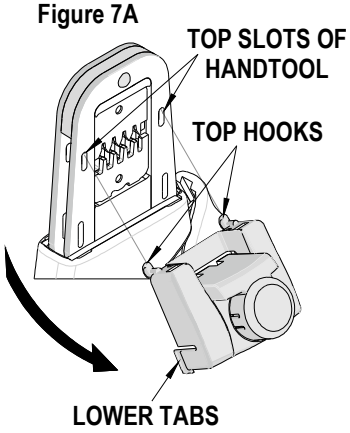

Figure 7B

Right or Left Hand Operation

This hand tool has an added feature that can be converted from a right handed application to a left handed application. It is necessary to reverse the tooling if using the left handed application along with the locator. Follow the steps below:

1. The locator must be removed before reversing the tooling.

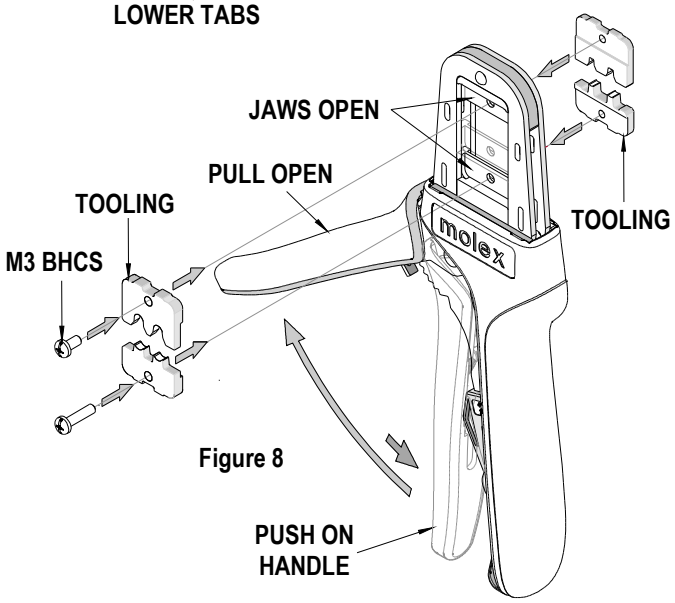

Figure 8

2. Remove the M3 BHCS which is holding the upper tooling.
3. Flip the upper tooling to the opposite side and replace the M3 BHCS. Make sure the small markings on the front and back of the hand tool frame match up and are on the outside of the hand tool frame. See Figure 8 and 9.
4. Do the same thing with the lower tooling and tighten the M3 screws. Be sure the small markings line up.
5. Reinstall the locator by following the Instructions in the locator replacement section.

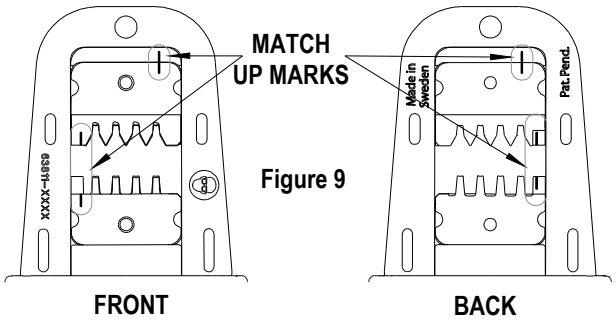

Figure 9

Maintenance

It is recommended that each operator of the tool be made aware of, and responsible for, the following maintenance steps:

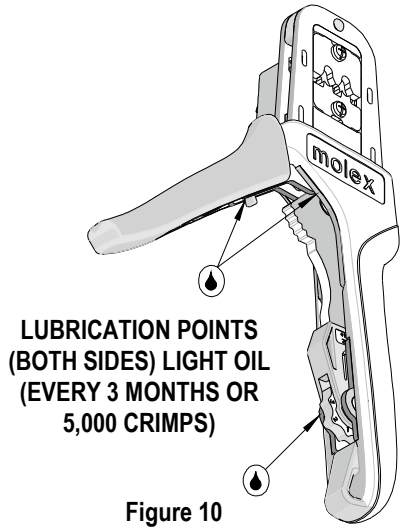

Figure 10

1. Remove dust, moisture, and other contaminants with a clean brush, or soft, lint free cloth.
2. Do not use any abrasive materials that could damage the tool.
3. Make certain all pins; pivot points and bearing surfaces are protected with a thin coat of high quality machine oil. Do not oil excessively. The tool was engineered for durability but like any other equipment it needs cleaning and lubrication for a maximum service life of trouble free crimping. Light oil (such as 30 weight automotive oil) used at the oil points, every 5,000 crimps or 3 months, will significantly enhance the tool life.
4. Wipe excess oil from hand tool, particularly from crimping area. Oil transferred from the crimping area onto certain terminations may affect the electrical characteristics of an application.
5. When tool is not in use, keep the handles closed to prevent objects from becoming lodged in the crimping dies, and store the tool in a clean, dry area.

Miscrimps or Jams

Should this tool ever become stuck or jammed in a partially closed position, **Do Not** force the handles open or closed. The tool will open easily by pressing up on the ratchet release lever in the movable handle. See Figure 11.

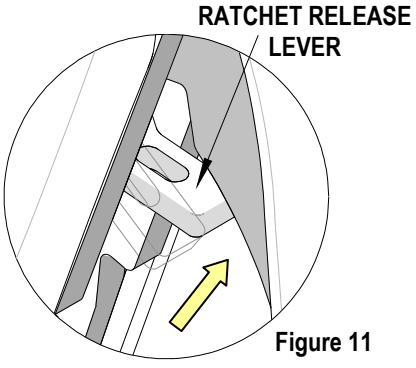

Figure 11

How to Adjust Tool Preload (See Figure 10)

This hand tool is factory preset to 25-45 LBS. preload. It may be necessary over the life of the tool to adjust tool handle preload force. Listed below are the steps required to adjust the crimping force of the hand tool to obtain proper crimp conditions:

1. Hold the hand tool in the palm of your hand as shown in Figure 12. Using the index finger squeeze the link towards the top of the hand tool frame. This will release the preload adjustment wheel.

2. Rotate the setting wheel counter-clockwise (CCW) to increase handle force. The numbers will display higher. To decrease handle force rotate the setting wheel clockwise (CW).
3. Release the link to lock the setting wheel in place.
4. Check the crimp specifications or conduct a pull test after tool handle preload force is adjusted.

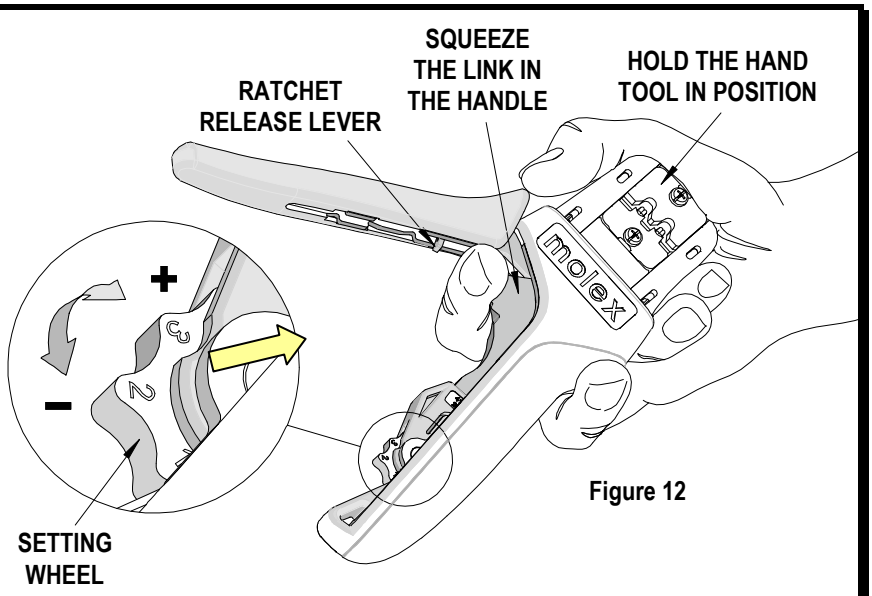

Figure 12

Warranty

This tool is for electrical terminal crimping purposes only. This tool is made of the best quality materials. All vital components are long life tested. All tools are warranted to be free of manufacturing defects for a period of 30 days. Should such a defect occur, we will repair or exchange the tool free of charge. This repair or exchange will not be applicable to altered, misused, or damaged tools. This tool is designed for hand use only. Any clamping, fixturing, or use of handle extensions voids this warranty.

CAUTION: Molex crimp specifications are valid only when used with Molex terminals and tooling.

CAUTIONS:

1. Manually powered hand tools are intended for low volume or field repair. This tool is NOT intended for production use. Repetitive use of this tool should be avoided.
2. Insulated rubber handles are not protection against electrical shock.
3. Wear eye protection at all times.
4. Use only the Molex terminals specified for crimping with this tool.

Certification

Molex does not certify or re-certify hand tools but rather supplies the following guidelines for customers to re-certify hand tools.

- This tool is qualified to pull force only. To re-certify, crimp a terminal to a wire, which has been stripped 12.7mm (1/2") long, so there is no crimping of the insulation. Pull the terminal and wire at a rate no faster than 25mm (1.00") per minute. See the Molex web site for the Quality Crimp Handbook for more information on pull testing.
- If the tool does not meet minimum pull force values, handle preload should be increased and the pull test rerun, (See How to Adjust Preload).
- When the hand tool is no longer capable of achieving minimum pull force, it should be taken out of service and replaced.

PARTS LIST

Item Number	Order Number	Description	Quantity
REF	63811-7900	Hand Crimp Tool	Figure 13
1	63811-7975	Locator Assembly	1
2	63810-0104	Spring, Return	1
3	63810-0105	Spring, Ratchet	1

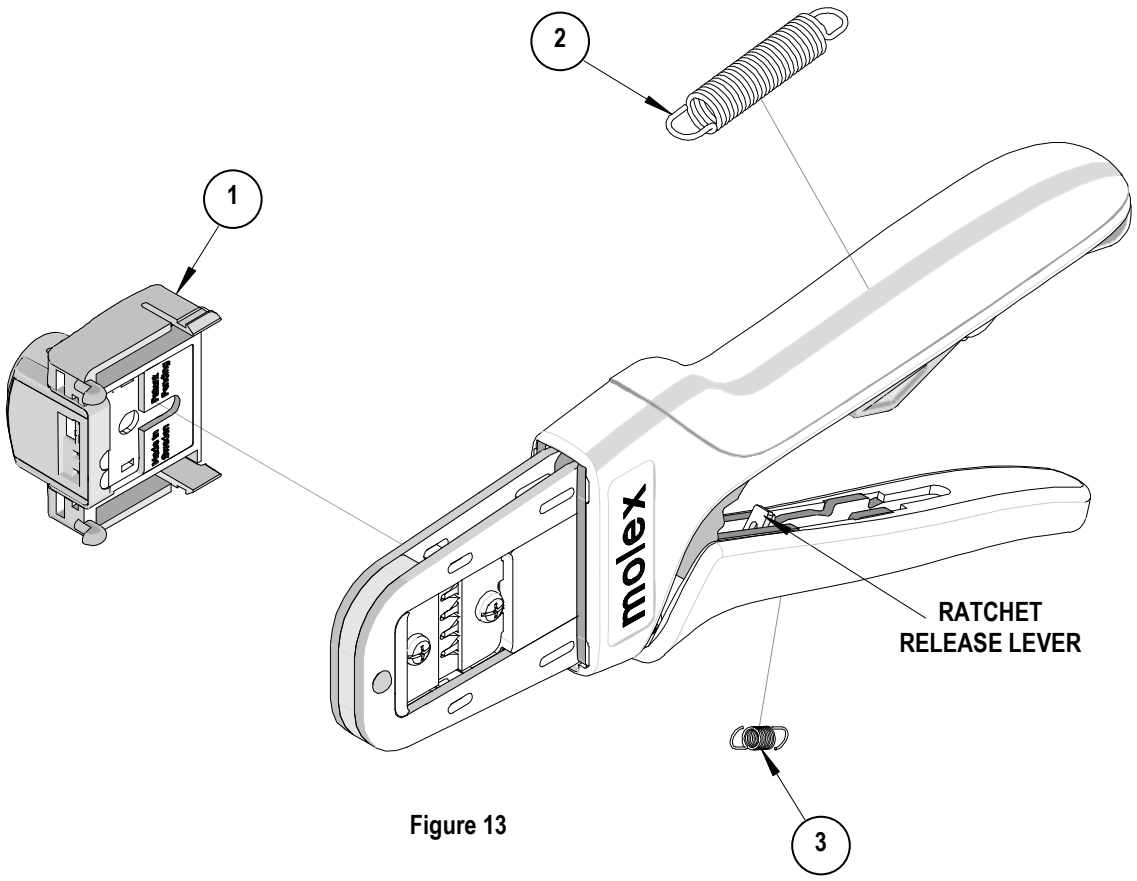

Figure 13

Visit our Web site at http://www.molex.com