

Modular Crimp Head
Order No. 63823-8370

molex

Application Tooling Specification Sheet

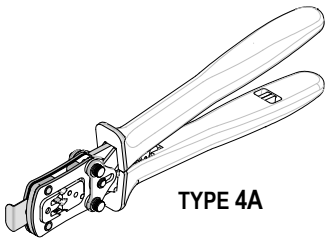

Hand Crimp Tool
Order No. 63823-8300

FEATURES

- A full cycle ratcheting hand tool ensures complete crimps
- Ergonomically designed soft handles
- Precisely designed crimping profiles with simple contact positioning
- Easy handling due to outstanding force ratio
- Modular Crimp Head is removable and can be use in the Air Powered Tool Order No.63816-0100, accompanied by Air Powered Crimp Adapter (Order No. 63816-0700).
- Can also be used in the Battery Powered Tool Order No. 63816-0200 (110 V) or 63816-0250 (220 V) accompanied by Battery Powered Crimp Adapter (Order No. 63816-0600).

SCOPE

Products: 6.35mm (.250") Tab Slip-on Male Crimp Terminals, 20-22 AWG, 0.30-0.50mm² wires.

Terminal Series No.	Terminal Order No.	Wire Size and Type			✦ Insulation Diameter		Strip Length	
		AWG	mm²	✦✦ Type	mm	In.	mm	In.
35725	35725-3000	20	-	UL1015, UL1007	1.70-2.60	.067-.102	4.80-5.20	.189-.205
		22	-	UL1015, UL1007	1.50-2.50	.059-.098		
	35725-3010	-	0.50	AVS, AVSS	1.60-2.10	.063-.083		
		-	0.30	AVS, AVSS	1.40-1.90	.055-.075		

✦ Insulation crimp to meet IPC/WHMA-A-620 Class 2 compliance.
✦✦ Terminal will accommodate the UL1015, UL1007 and AVS, AVSS wires.
Customer to cut off terminal from reel: 0.50mm (.020") maximum Cut-off Tab.

DEFINITION OF TERMS

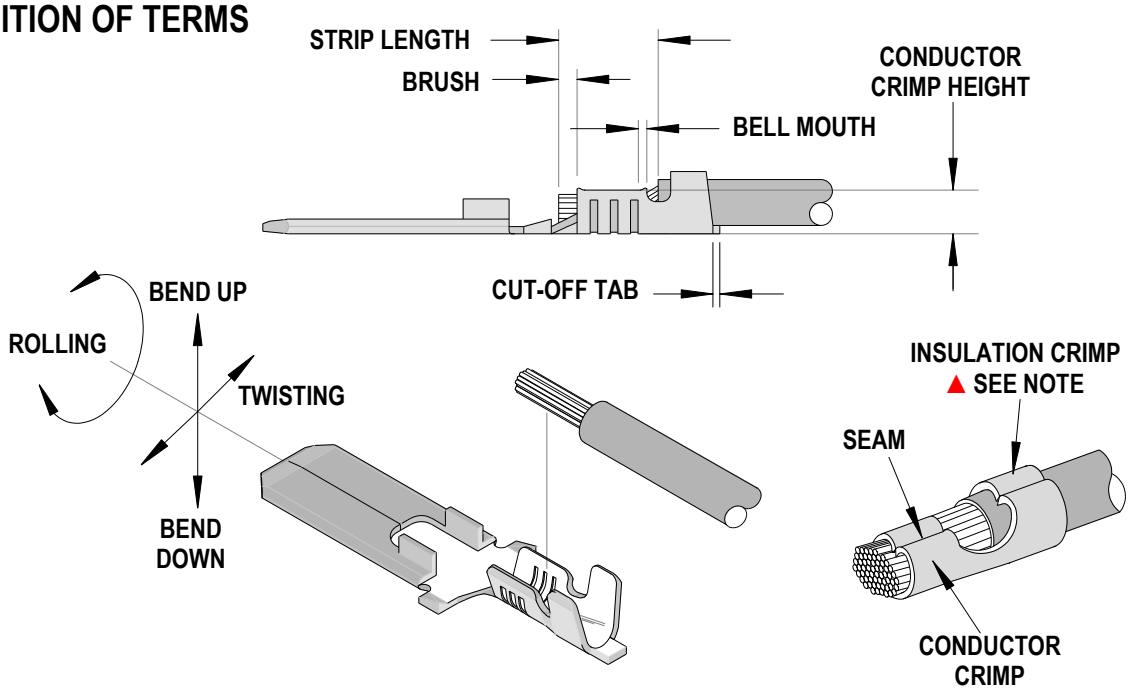

▲ Insulation Crimp Note:
Due to the terminal's insulation grip design and/or insulation diameter range, this tool uses "overlap" form geometry in the insulation punch. This produces an overlap insulation crimp (A620 – compliant). While the insulation punch profile may appear "lopsided", this is a normal condition for this tool. See figure to the right. (Some tools with multiple crimp pockets may not have the "overlap" profile on all pockets).

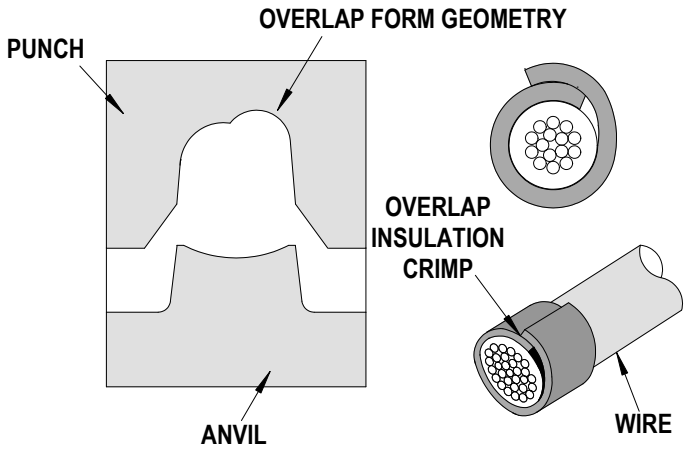

CRIMP SPECIFICATIONS:

Terminal Series No.	Bell mouth		Conductor Brush	
	mm	In.	mm	In.
35725	0.30-0.60	.012-.024	0.30-0.80	.012-.032

Terminal Series No.	Bend up	Bend down	Twist	Roll	Seam
	Degree		Degree		
35725	3	3	3	5	Seam shall not be open and no wire allowed out of the crimping area

After crimping, the conductor profile should measure the following.

Terminal Series No.	Wire Size		Conductor Crimp				Pull Force Minimum		Profile	
			Height		Width					
	AWG	mm²	mm	In.	mm	In.	N	Lb.	20 AWG / 0.50mm2	22 AWG / 0.30mm2
35725	20	-	1.39-1.49	.055-.059	1.90-2.10	.075-.083	88.2	19.8	X	
	22	-	1.31-1.41	.052-.056	1.90-2.10	.075-.083	58.8	13.2		X
	-	0.50	1.39-1.49	.055-.059	1.90-2.10	.075-.083	88.2	19.8	X	
	-	0.30	1.31-1.41	.052-.056	1.90-2.10	.075-.083	58.8	13.2		X

Terminal Series No.	Wire Size		Insulation Crimp			
			Height (Max)		Width	
	AWG	mm²	mm	In.	mm	In.
35725	20	-	2.90	.114	2.80-3.00	.110-.118
	22	-	2.70	.106	2.80-3.00	.110-.118
	-	0.50	2.90	.114	2.80-3.00	.110-.118
	-	0.30	2.70	.106	2.80-3.00	.110-.118

T Tool Qualification Notes:

1. Pull Force should be measured with no influence from the insulation crimp.
2. The above specifications are guidelines to an optimum crimp.

OPERATION

Open the tool by squeezing the handles together, at the end of the closing stroke, the ratchet mechanism will release the handles, and the hand tool will spring open.

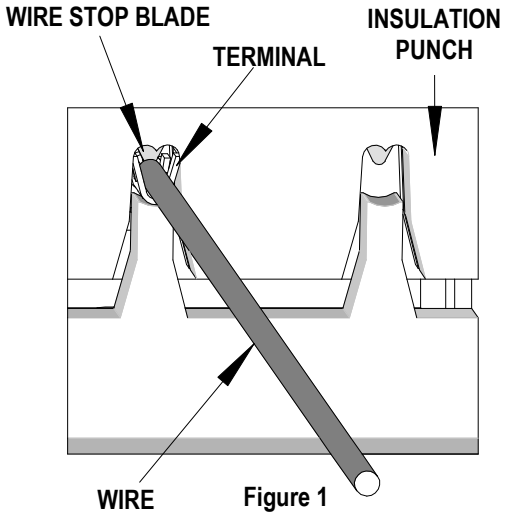

Figure 1

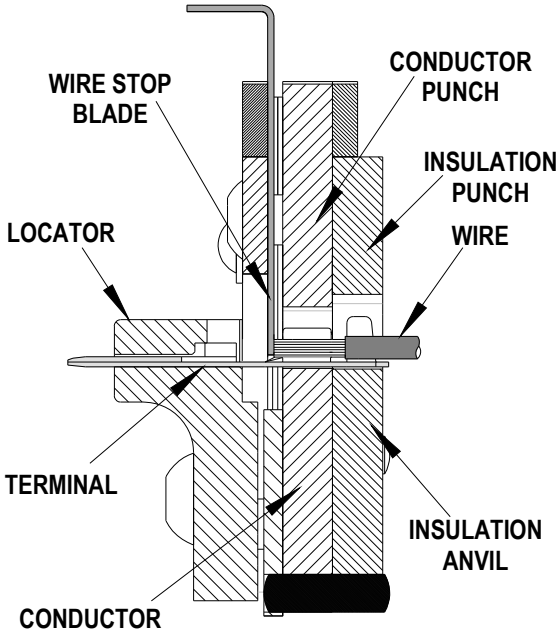

Figure 2

Crimping Terminals

1. Place the terminal into the correct die profile until the terminal stopped by the locator.
2. Bring the wire stop blade down; make sure the wire stop located behind the conductor grip.
3. Place a pre-striped wire into the terminal until the end of wire touching the wire stop. See Figure 2.

4. Close the tool until the ratchet releases, the tool handles will then spring open.
5. Carefully remove the crimped terminal.

Note: The tamper proof ratchet action will not release the tool until it has been fully closed.

Maintenance

It is recommended that each operator of the tool be made aware of, and responsible for, the following maintenance steps:

1. Remove dust, moisture, and other contaminants with a clean brush, or soft, lint free cloth.
2. Do not use any abrasive materials that could damage the tool.
3. Make certain all pins; pivot points and bearing surfaces are protected with a thin coat of high quality machine oil. Do not oil excessively. The tool was engineered for durability but like any other equipment it needs cleaning and lubrication for a maximum service life of trouble free crimping. Light oil (such as 30 weight automotive oil) used at the oil points, every 5,000 crimps or 3 months, will significantly enhance the tool life.
4. Wipe excess oil from hand tool, particularly from crimping area. Oil transferred from the crimping area onto certain terminations may affect the electrical characteristics of an application.
5. When tool is not in use, keep the handles closed to prevent objects from becoming lodged in the crimping dies, and store the tool in a clean, dry area.

Miscrimps or Jams

Should this tool ever become stuck or jammed in a partially closed position, **Do Not** force the handles open or closed. The tool will open easily by lifting the ratchet release lever. See Figure 6.

Warranty

This tool is for electrical terminal crimping purposes only. This tool is made of the best quality materials. All vital components are long life tested. All tools are warranted to be free of manufacturing defects for a period of 30 days. Should such a defect occur, we will repair or exchange the tool free of charge. This repair or exchange will not be applicable to altered, misused, or damaged tools. This tool is designed for hand use only. Any clamping, fixturing, or use of handle extensions voids this warranty.

CAUTION: Repetitive use of this tool should be avoided.

CAUTIONS:

1. Manually powered hand tools are intended for low volume or field repair. This tool is NOT intended for production use. Repetitive use of this tool should be avoided.
2. Insulated rubber handles are not protection against electrical shock.
3. Wear eye protection at all times.
4. Use only the Molex terminals specified for crimping with this tool.

Notes:

1. This tool should only be used for the terminals and wire gauges specified on this sheet.
2. This tool is not adjustable for crimp height; however crimp force is adjustable (See instructions above). Variations in tools, terminals, wire stranding and insulation types may affect crimp height.
3. This tool is intended for standard conductor sizes. It may not give a good insulation crimp support for all insulation sizes.

4. Molex does not repair hand tools (see warranty above). The replacement parts listed are the only parts available for repair. If the handles or crimp tooling is damaged or worn, a new tool must be purchased.
5. Pull force should be used as the final criteria for an acceptable crimp. Pull force is measured with no influence from the insulation crimp. The insulation should be stripped long (1/2 in.) so the insulation grips on the terminal do not grip the wire insulation or the conductor. Refer to Molex Quality Crimping Handbook 63800-0029 for additional information on crimping and crimp testing.
6. Molex does not certify crimp hand tools.

CAUTION: Molex crimp specifications are valid only when used with Molex terminals and tooling.

Applications for the Modular Crimp Head

WARNING: *NEVER* operate, service, install, or adjust this Modular Crimp Head without proper instruction and without first reading and understanding the instructions in the proper Manual or Specification Sheet. See Chart below for the correct Manual or Specification Sheet.

WARNING: *NEVER* install tooling or service this tool while it is into any power source. Disconnect the power by unplugging or turn off the Actuator from its power source.

CAUTION: Keep fingers away from the crimping area when operating this tool. It may cause severe injury.

CAUTION: Wear safety glasses when operating or serving this tool.

The chart below shows all applications for this Modular Crimp Head.

Modular Crimp Head Order No.	Tool Order no.	Tool Description	Adapter Order No.	Adapter Description	Figure No.
63823-8370	63816-0000	Hand Crimp Frame (Short)	N/A	N/A	3
	63816-0050	Hand Crimp Frame (Long)	N/A	N/A	3
	63816-0200	Battery Power Tool (110 V)	63816-0600	Battery Power Crimp Adapter	4
	63816-0250	Battery Power Tool (220 V)	63816-0600	Battery Power Crimp Adapter	4
	63816-0100	Air Power Tool	63816-0700	Air Power Crimp Adapter	5

Applications for the Modular Crimp Head

Hand Crimp Tool	Battery Powered Tool	Air Powered Tool
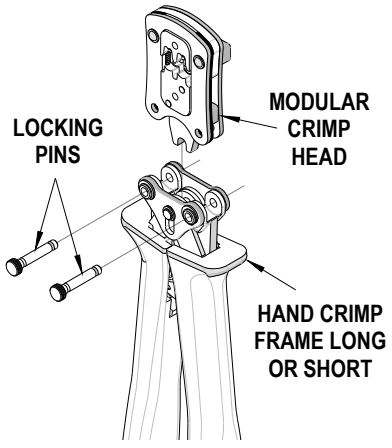	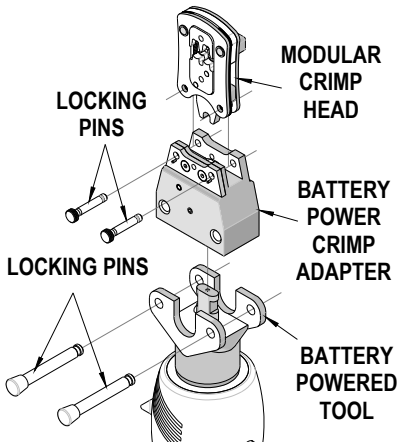	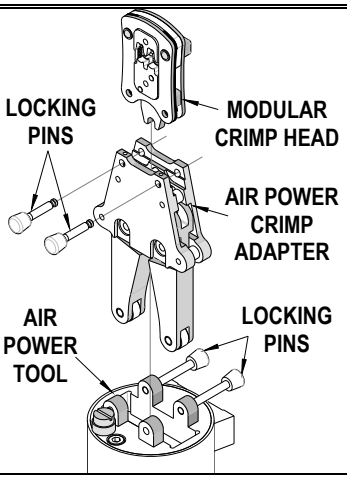
Figure 3	Figure 4	Figure 5

PARTS LIST

Hand Crimp Tool 63823-8300			
Item	**Order Number**	**Description**	**Quantity**
1	63823-8370	Modular Crimp Head	1 (Ref)
2	63816-0050	Hand Crimp Frame (Long)	1 (Ref)
3	63823-8375	Locator	1
4	63816-0001	Locking Pin	2
5	63600-0525	Handle Spring	1
6	63600-0520	Crimping Spring	2

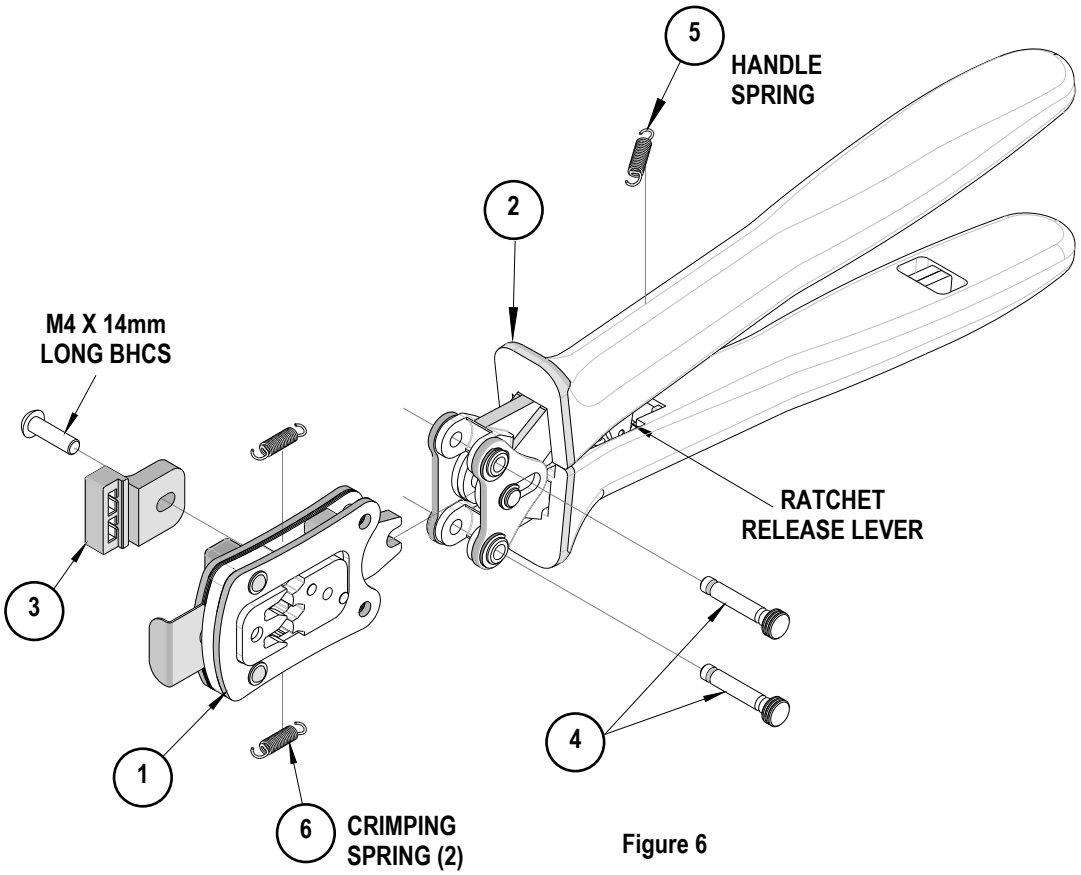

Figure 6

http://www.molex.com