Mini-Mac Applicator Air Feed-Mylar Tape	molex Application Tooling Specification Sheet	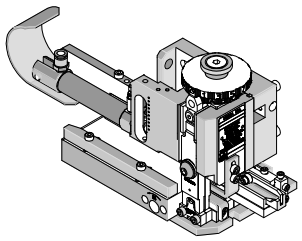 Order No. 63885-1500

FEATURES

- Directly adapts to most crimp presses and automatic wire processors
- Applicator designed to industry standard mounting and shut height of 135.80mm (5.346")
- Conductor and insulation rings allow quick adjustment for conductor and insulation crimp height change
- Quick set-up time; plus the crimp height, track and feed adjustments can be set without removing the applicator from the crimp press

SCOPE

Products: Insulkrimp™ and Avikrimp™ Quick Disconnects, Ring Tongue, Rectangular Tongue, Snap Tongue, Flanged Tongue, Spade Tongue, Hook Tongue and Multi-Stud Ring Terminals. Butt Splices, Railroad and Wire Pin Terminals 10-12 AWG and
14-16 AWG, Heavy Duty.

Testing

Mechanical

The tensile test, or pull test, is a means of evaluating the mechanical properties of the crimped connections. The following chart shows the UL and government specifications (MIL-T-7928) for various wire sizes. The tensile strength is shown in pounds and indicates the minimum acceptable force to break or separate the terminal from the conductor.

Color Code	Wire Size (AWG)	*UL - 486 A	*UL – 486 C	*UL – 310	*Military Class 2
Yellow	26	3	N/A	N/A	7
Yellow	24	5	N/A	N/A	10
Red	22	8	8	8	15
Red	20	13	10	13	19
Red	18	20	10	20	38
Blue	16	30	15	30	50
Blue	14	50	25	50	70
Yellow	12	70	35	70	110
Yellow	10	80	40	80	150
Red	8	90	45	N/A	225
Blue	6	100	50	N/A	300

*UL - 486 A - Terminals (Copper conductors only)
*UL - 486 C - Butt Splices, Parallel Splices, Closed End Connectors, and Wire Nuts
*UL - 310 - Quick Disconnects, Flag and Couplers
*Military Class 2- Military Approved Terminals only as listed

Product List

The following is a partial list of the product order numbers and their specifications that this tool is designed to run. Updates to this list are available on www.molex.com.

Terminal Order No.	Terminal Eng. No.	Wire Size		Insulation Diameter Maximum		Strip Length	
		AWG	mm²	mm	In.	mm	In.
19025-0006	CMCT-5T	10-12	5.25-3.30	5.70	.225	9.53	.375
19054-0020	B-228-04HDXT	14-16	2.00-1.30	6.35	.250	7.94	.313
19054-0021	B-230-10HDXT	14-16	2.00-1.30	6.35	.250	7.94	.313
19054-0022	B-230-14HDXT	14-16	2.00-1.30	6.35	.250	7.94	.313
19054-0068	B-201-38HDXT	14-16	2.00-1.30	6.35	.250	7.94	.313
19054-0091	B-228-06HDXT	14-16	2.00-1.30	6.35	.250	7.94	.313
19054-0093	B-228-08HDXT	14-16	2.00-1.30	6.35	.250	7.94	.313
19054-0095	B-228-10HDXT	14-16	2.00-1.30	6.35	.250	7.94	.313
19054-0099	B-230-56HDXT	14-16	2.00-1.30	6.35	.250	7.94	.313
19054-0125	B-240-14HDXT	14-16	2.00-1.30	6.35	.250	7.94	.313
19054-0127	B-240-38HDXT	14-16	2.00-1.30	6.35	.250	7.94	.313
19054-0129	B-240-56HDXT	14-16	2.00-1.30	6.35	.250	7.94	.313
19055-0070	B-628-04HDXT	14-16	2.00-1.30	6.35	.250	9.53	.375
19055-0072	B-628-06HDXT	14-16	2.00-1.30	6.35	.250	9.53	.375
19055-0074	B-628-08HDXT	14-16	2.00-1.30	6.35	.250	9.53	.375
19055-0076	B-628-10HDXT	14-16	2.00-1.30	6.35	.250	9.53	.375
19055-0079	B-630-10HDXT	14-16	2.00-1.30	6.35	.250	9.53	.375
19055-0081	B-630-14HDXT	14-16	2.00-1.30	6.35	.250	9.53	.375
19055-0083	B-630-56HDXT	14-16	2.00-1.30	6.35	.250	9.53	.375
19055-0089	B-636-04HDXT	14-16	2.00-1.30	6.35	.250	9.53	.375
190550091	B-636-06HDXT	14-16	2.00-1.30	6.35	.250	9.53	.375
190550093	B-636-08HDXT	14-16	2.00-1.30	6.35	.250	9.53	.375
190550115	B-640-10HDXT	14-16	2.00-1.30	6.35	.250	9.53	.375
190550117	B-640-14HDXT	14-16	2.00-1.30	6.35	.250	9.53	.375
19055-0119	B-640-38HDXT	14-16	2.00-1.30	6.35	.250	9.53	.375
19055-0121	B-640-56HDXT	14-16	2.00-1.30	6.35	.250	9.53	.375
19057-0064	B-528-04HDT	14-16	2.00-1.30	5.87	.231	9.53	.375
19057-0066	B-528-06HDT	14-16	2.00-1.30	5.87	.231	9.53	.375
19057-0068	B-528-08HDT	14-16	2.00-1.30	5.87	.231	9.53	.375
19057-0070	B-528-10HDT	14-16	2.00-1.30	5.87	.231	9.53	.375
19057-0072	B-530-10HDT	14-16	2.00-1.30	5.87	.231	9.53	.375
19057-0074	B-530-14HDT	14-16	2.00-1.30	5.87	.231	9.53	.375
19057-0076	B-530-56HDT	14-16	2.00-1.30	5.87	.231	9.53	.375
19057-0081	B-536-04HDT	14-16	2.00-1.30	5.87	.231	9.53	.375
19057-0083	B-536-06HDT	14-16	2.00-1.30	5.87	.231	9.53	.375
19057-0085	B-536-08HDT	14-16	2.00-1.30	5.87	.231	9.53	.375
19057-0106	B-540-10HDT	14-16	2.00-1.30	5.87	.231	9.53	.375
19057-0108	B-540-14HDT	14-16	2.00-1.30	5.87	.231	9.53	.375
19057-0110	B-540-38HDT	14-16	2.00-1.30	5.87	.231	9.53	.375
19057-0112	B-540-56HDT	14-16	2.00-1.30	5.87	.231	9.53	.375
19058-0034	B-828-04HDT	14-16	2.00-1.30	5.72	.225	9.53	.375
19058-0036	B-828-04HDXT	14-16	2.00-1.30	5.72	.225	9.53	.375
19058-0038	B-828-06HDT	14-16	2.00-1.30	5.72	.225	9.53	.375
19058-0040	B-828-06HDXT	14-16	2.00-1.30	5.72	.225	9.53	.375
19058-0044	B-828-08HDT	14-16	2.00-1.30	5.72	.225	9.53	.375
19058-0046	B-828-08HDXT	14-16	2.00-1.30	5.72	.225	9.53	.375
19058-0050	B-828-10HDT	14-16	2.00-1.30	5.72	.225	9.53	.375
19058-0053	B-828-10HDXT	14-16	2.00-1.30	5.72	.225	9.53	.375
19058-0057	B-830-10HD-03T	14-16	2.00-1.30	5.72	.225	9.53	.375
19058-0059	B-830-10HDRRT	14-16	2.00-1.30	5.72	.225	9.53	.375

Terminal Order No.	Terminal Eng. No.	Wire Size		Insulation Diameter Maximum		Strip Length	
		AWG	mm²	mm	In.	mm	In.
19058-0060	B-830-10HDT	14-16	2.00-1.30	5.72	.225	9.53	.375
19058-0062	B-830-10HDXT	14-16	2.00-1.30	5.72	.225	9.53	.375
19058-0065	B-830-14HD-03T	14-16	2.00-1.30	5.72	.225	9.53	.375
19058-0067	B-830-14HDRRT	14-16	2.00-1.30	5.72	.225	9.53	.375
19058-0068	B-830-14HDT	14-16	2.00-1.30	5.72	.225	9.53	.375
19058-0070	B-830-14HDXT	14-16	2.00-1.30	5.72	.225	9.53	.375
19058-0074	B-830-56HD-03T	14-16	2.00-1.30	5.72	.225	9.53	.375
19058-0076	B-830-56HDRRT	14-16	2.00-1.30	5.72	.225	9.53	.375
19058-0077	B-830-56HDT	14-16	2.00-1.30	5.72	.225	9.53	.375
19058-0079	B-830-56HDXT	14-16	2.00-1.30	5.72	.225	9.53	.375
19058-0086	B-836-04HDT	14-16	2.00-1.30	5.72	.225	9.53	.375
19058-0088	B-836-04HDXT	14-16	2.00-1.30	5.72	.225	7.14	.281
19058-0090	B-836-06HDT	14-16	2.00-1.30	5.72	.225	9.53	.375
19058-0092	B-836-06HDXT	14-16	2.00-1.30	5.72	.225	7.14	.281
19058-0094	B-836-08HDT	14-16	2.00-1.30	5.72	.225	9.53	.375
19058-0096	B-836-08HDXT	14-16	2.00-1.30	5.72	.225	7.14	.281
19058-0109	B-840-10HDT	14-16	2.00-1.30	5.72	.225	9.53	.375
19058-0111	B-840-10HDXT	14-16	2.00-1.30	5.72	.225	9.53	.375
19058-0113	B-840-14HDT	14-16	2.00-1.30	5.72	.225	9.53	.375
19058-0115	B-840-14HDXT	14-16	2.00-1.30	5.72	.225	9.53	.375
19058-0119	B-840-38HDT	14-16	2.00-1.30	5.72	.225	9.53	.375
19058-0121	B-840-38HDXT	14-16	2.00-1.30	5.72	.225	9.53	.375
19058-0125	B-840-56HDT	14-16	2.00-1.30	5.72	.225	9.53	.375
19058-0127	B-840-56HDXT	14-16	2.00-1.30	5.72	.225	9.53	.375
19070-0118	C-228-04XT	10-12	5.25-3.30	6.35	.250	9.53	.375
19070-0120	C-228-06XT	10-12	5.25-3.30	6.35	.250	9.53	.375
19070-0122	C-228-08XT	10-12	5.25-3.30	6.35	.250	9.53	.375
19070-0125	C-228-10XT	10-12	5.25-3.30	6.35	.250	9.53	.375
19070-0131	C-230-10XT	10-12	5.25-3.30	6.35	.250	9.53	.375
19070-0133	C-230-14XT	10-12	5.25-3.30	6.35	.250	9.53	.375
19070-0135	C-230-38XT	10-12	5.25-3.30	6.35	.250	9.53	.375
19070-0137	C-230-56XT	10-12	5.25-3.30	6.35	.250	9.53	.375
19070-0142	C-236-04XT	10-12	5.25-3.30	6.35	.250	9.53	.375
19070-0144	C-236-06XT	10-12	5.25-3.30	6.35	.250	9.53	.375
19070-0146	C-236-08XT	10-12	5.25-3.30	6.35	.250	9.53	.375
19070-0149	C-240-10XT	10-12	5.25-3.30	6.35	.250	9.53	.375
19070-0151	C-240-14XT	10-12	5.25-3.30	6.35	.250	9.53	.375
19070-0154	C-240-38XT	10-12	5.25-3.30	6.35	.250	9.53	.375
19070-0156	C-240-56XT	10-12	5.25-3.30	6.35	.250	9.53	.375
19071-0090	C-628-04XT	10-12	5.25-3.30	6.35	.250	9.53	.375
19071-0093	C-628-06XT	10-12	5.25-3.30	6.35	.250	9.53	.375
19071-0096	C-628-08XT	10-12	5.25-3.30	6.35	.250	9.53	.375
19071-0099	C-628-10XT	10-12	5.25-3.30	6.35	.250	9.53	.375
19071-0101	C-628-209XT	10-12	5.25-3.30	6.35	.250	9.53	.375
19071-0104	C-630-10XT	10-12	5.25-3.30	6.35	.250	9.53	.375
19071-0107	C-630-14XT	10-12	5.25-3.30	6.35	.250	9.53	.375
19071-0111	C-630-56XT	10-12	5.25-3.30	6.35	.250	9.53	.375
19071-0116	C-636-04XT	10-12	5.25-3.30	6.35	.250	9.53	.375
19071-0118	C-636-06XT	10-12	5.25-3.30	6.35	.250	9.53	.375
19071-0120	C-636-08XT	10-12	5.25-3.30	6.35	.250	9.53	.375

Terminal Order No.	Terminal Eng. No.	Wire Size		Insulation Diameter Maximum		Strip Length	
		AWG	mm²	mm	In.	mm	In.
19071-0122	C-640-10XT	10-12	5.25-3.30	6.35	.250	9.53	.375
19071-0124	C-640-14XT	10-12	5.25-3.30	6.35	.250	9.53	.375
19071-0128	C-640-38XT	10-12	5.25-3.30	6.35	.250	9.53	.375
19071-0131	C-640-56XT	10-12	5.25-3.30	6.35	.250	9.53	.375
19073-0107	C-528-04T	10-12	5.25-3.30	5.87	.231	9.53	.375
19073-0109	C-528-06T	10-12	5.25-3.30	5.87	.231	9.53	.375
19073-0112	C-528-08T	10-12	5.25-3.30	5.87	.231	9.53	.375
19073-0115	C-528-10T	10-12	5.25-3.30	5.87	.231	9.53	.375
19073-0118	C-530-10T	10-12	5.25-3.30	5.87	.231	9.53	.375
19073-0121	C-530-14T	10-12	5.25-3.30	5.87	.231	9.53	.375
19073-0124	C-530-56T	10-12	5.25-3.30	5.87	.231	9.53	.375
19073-0129	C-536-04T	10-12	5.25-3.30	5.87	.231	9.53	.375
19073-0131	C-536-06T	10-12	5.25-3.30	5.87	.231	9.53	.375
19073-0133	C-536-08T	10-12	5.25-3.30	5.87	.231	9.53	.375
19073-0135	C-540-10T	10-12	5.25-3.30	5.87	.231	9.53	.375
19073-0137	C-540-14T	10-12	5.25-3.30	5.87	.231	9.53	.375
19073-0141	C-540-38T	10-12	5.25-3.30	5.87	.231	9.53	.375
19073-0144	C-540-56T	10-12	5.25-3.30	5.87	.231	9.53	.375
19073-0157	C-828-04T	10-12	5.25-3.30	5.72	.225	9.53	.375
19073-0159	C-828-04XT	10-12	5.25-3.30	5.72	.225	9.53	.375
19073-0162	C-828-06T	10-12	5.25-3.30	5.72	.225	9.53	.375
19073-0164	C-828-06XT	10-12	5.25-3.30	5.72	.225	9.53	.375
19073-0167	C-828-08T	10-12	5.25-3.30	5.72	.225	9.53	.375
19073-0169	C-828-08XT	10-12	5.25-3.30	5.72	.225	9.53	.375
19073-0172	C-828-10T	10-12	5.25-3.30	5.72	.225	9.53	.375
19073-0174	C-828-10XT	10-12	5.25-3.30	5.72	.225	9.53	.375
19073-0180	C-830-10T	10-12	5.25-3.30	5.72	.225	9.53	.375
19073-0183	C-830-10XLBKT	10-12	5.25-3.30	5.72	.225	9.53	.375
19073-0184	C-830-10XT	10-12	5.25-3.30	5.72	.225	9.53	.375
19073-0190	C-830-14T	10-12	5.25-3.30	5.72	.225	9.53	.375
19073-0193	C-830-14XLBKT	10-12	5.25-3.30	5.72	.225	9.53	.375
19073-0194	C-830-14XT	10-12	5.25-3.30	5.72	.225	9.53	.375
19073-0201	C-830-56T	10-12	5.25-3.30	5.72	.225	9.53	.375
19073-0204	C-830-56XLBKT	10-12	5.25-3.30	5.72	.225	9.53	.375
19073-0205	C-830-56XT	10-12	5.25-3.30	5.72	.225	9.53	.375
19073-0213	C-836-04T	10-12	5.25-3.30	5.72	.225	9.53	.375
19073-0215	C-836-04XT	10-12	5.25-3.30	5.72	.225	9.53	.375
19073-0218	C-836-06T	10-12	5.25-3.30	5.72	.225	9.53	.375
19073-0219	C-836-06VT	10-12	5.25-3.30	5.72	.225	9.53	.375
19073-0221	C-836-06XT	10-12	5.25-3.30	5.72	.225	9.53	.375
19073-0224	C-836-08T	10-12	5.25-3.30	5.72	.225	9.53	.375
19073-0226	C-836-08XT	10-12	5.25-3.30	5.72	.225	9.53	.375
19073-0228	C-840-10T	10-12	5.25-3.30	5.72	.225	9.53	.375
19073-0230	C-840-10XT	10-12	5.25-3.30	5.72	.225	9.53	.375
19073-0232	C-840-14T	10-12	5.25-3.30	5.72	.225	9.53	.375
19073-0234	C-840-14XT	10-12	5.25-3.30	5.72	.225	9.53	.375
19073-0237	C-840-38T	10-12	5.25-3.30	5.72	.225	9.53	.375
19073-0239	C-840-38XT	10-12	5.25-3.30	5.72	.225	9.53	.375
19073-0243	C-840-56T	10-12	5.25-3.30	5.72	.225	9.53	.375
19073-0245	C-840-56XT	10-12	5.25-3.30	5.72	.225	9.53	.375
19080-0006	C-2006-MSXT	10-12	5.25-3.30	6.35	.250	9.53	.375
19081-0006	C-5006-MST	10-12	5.25-3.30	5.87	.231	9.53	.375
19090-0078	C-2103-08XT	10-12	5.25-3.30	6.35	.250	9.53	.375
19090-0080	C-2106-06XT	10-12	5.25-3.30	6.35	.250	9.53	.375
19090-0082	C-212-06XT	10-12	5.25-3.30	6.35	.250	9.53	.375
19090-0084	C-212-08XT	10-12	5.25-3.30	6.35	.250	9.53	.375
19090-0086	C-212-10XT	10-12	5.25-3.30	6.35	.250	9.53	.375
19092-0066	C-6103-08XT	10-12	5.25-3.30	6.35	.250	9.53	.375
19092-0068	C-6106-06XT	10-12	5.25-3.30	6.35	.250	9.53	.375
19092-0070	C-612-06XT	10-12	5.25-3.30	6.35	.250	9.53	.375
19092-0072	C-612-08XT	10-12	5.25-3.30	6.35	.250	9.53	.375
19092-0074	C-612-10XT	10-12	5.25-3.30	6.35	.250	9.53	.375
19094-0082	C-5103-08T	10-12	5.25-3.30	6.35	.225	9.53	.375
19094-0084	C-5106-06T	10-12	5.25-3.30	6.35	.225	9.53	.375
19094-0086	C-512-06T	10-12	5.25-3.30	6.35	.225	9.53	.375
19094-0088	C-512-08T	10-12	5.25-3.30	6.35	.225	9.53	.375
19094-0090	C-512-10T	10-12	5.25-3.30	6.35	.225	9.53	.375
19095-0100	C-8103-08T	10-12	5.25-3.30	5.72	.225	9.53	.375
19095-0101	C-8103-08XT	10-12	5.25-3.30	5.72	.225	9.53	.375
19095-0103	C-8106-06T	10-12	5.25-3.30	5.72	.225	7.94	0.312
19095-0104	C-8106-06XT	10-12	5.25-3.30	5.72	.225	7.14	.281
19095-0106	C-812-06T	10-12	5.25-3.30	5.72	.225	9.53	.375
19095-0107	C-812-06XT	10-12	5.25-3.30	5.72	.225	9.53	.375
19095-0109	C-812-08T	10-12	5.25-3.30	5.72	.225	9.53	.375
19095-0110	C-812-08XT	10-12	5.25-3.30	5.72	.225	9.53	.375
19095-0112	C-812-10T	10-12	5.25-3.30	5.72	.225	9.53	.375
19095-0113	C-812-10XT	10-12	5.25-3.30	5.72	.225	9.53	.375
19099-0037	C-2196-06XT	10-12	5.25-3.30	6.35	.250	9.53	.375
19099-0039	C-2197-08XT	10-12	5.25-3.30	6.35	.250	9.53	.375
19099-0041	C-2198-10XT	10-12	5.25-3.30	6.35	.250	9.53	.375
19099-0045	C-2710-06XT	10-12	5.25-3.30	6.35	.250	9.53	.375
19099-0049	C-2718-08XT	10-12	5.25-3.30	6.35	.250	9.53	.375
19099-0051	C-2719-10XT	10-12	5.25-3.30	6.35	.250	9.53	.375
19099-0063	C-2199-14XT	10-12	5.25-3.30	6.35	.250	9.53	.375
19099-0064	C-2710-05XT	10-12	5.25-3.30	6.35	.250	9.53	.375
19115-0034	C-8196-06T	10-12	5.25-3.30	5.72	.225	9.53	.375
19115-0036	C-8197-08T	10-12	5.25-3.30	5.72	.225	9.53	.375
19115-0038	C-8198-10T	10-12	5.25-3.30	5.72	.225	9.53	.375
19115-0040	C-8199-14T	10-12	5.25-3.30	5.72	.225	9.53	.375
19115-0043	C-8710-06T	10-12	5.25-3.30	5.72	.225	9.53	.375
19115-0047	C-8718-08T	10-12	5.25-3.30	5.72	.225	9.53	.375
19115-0049	C-8719-10T	10-12	5.25-3.30	5.72	.225	9.53	.375
19115-0057	C-8710-05T	10-12	5.25-3.30	5.72	.225	9.53	.375
19120-0042	B-617-06HDXT	14-16	2.00-1.30	6.35	.250	9.53	.375
19120-0044	B-617-08HDXT	14-16	2.00-1.30	6.35	.250	9.53	.375
19120-0046	B-617-10HDXT	14-16	2.00-1.30	6.35	.250	9.53	.375
19121-0048	C-2104-08XT	10-12	5.25-3.30	6.35	.250	9.53	.375
19121-0052	C-217-06XT	10-12	5.25-3.30	6.35	.250	9.53	.375
19121-0054	C-217-08XT	10-12	5.25-3.30	6.35	.250	9.53	.375
19121-0057	C-217-10XT	10-12	5.25-3.30	6.35	.250	9.53	.375
19121-0084	C-2101-08XT	10-12	5.25-3.30	6.35	.250	9.53	.375
19121-0085	C-2104-06XT	10-12	5.25-3.30	6.35	.250	9.53	.375
19122-0055	C-6101-08XT	10-12	5.25-3.30	6.35	.250	9.53	.375
19122-0057	C-6104-06XT	10-12	5.25-3.30	6.35	.250	9.53	.375
19122-0061	C-617-06XT	10-12	5.25-3.30	6.35	.250	9.53	.375
19122-0063	C-617-08XT	10-12	5.25-3.30	6.35	.250	9.53	.375
19122-0065	C-617-10XT	10-12	5.25-3.30	6.35	.250	9.53	.375
19125-0040	B-517-06HDT	14-16	2.00-1.30	5.87	.231	9.53	.375
19125-0042	B-517-08HDT	14-16	2.00-1.30	5.87	.231	9.53	.375
19125-0044	B-517-10HDT	14-16	2.00-1.30	5.87	.231	9.53	.375
19125-0068	C-5101-08T	10-12	5.25-3.30	5.72	.225	9.53	.375
19125-0071	C-5104-06T	10-12	5.25-3.30	5.87	.231	9.53	.375
19125-0075	C-517-06T	10-12	5.25-3.30	5.87	.231	9.53	.375
19125-0077	C-517-08T	10-12	5.25-3.30	5.87	.231	9.53	.375
19125-0079	C-517-10T	10-12	5.25-3.30	5.87	.231	9.53	.375
19126-0013	B-817-06HDT	14-16	2.00-1.30	5.72	.225	7.14	.281

Terminal Order No.	Terminal Eng. No.	Wire Size		Insulation Diameter Maximum		Strip Length	
		AWG	mm²	mm	In.	mm	In.
19126-0014	B-817-06HDXT	14-16	2.00-1.30	5.72	.225	7.14	.281
19126-0015	B-817-08HDT	14-16	2.00-1.30	5.72	.225	9.53	.375
19126-0016	B-817-08HDXT	14-16	2.00-1.30	5.72	.225	7.14	.281
19126-0017	B-817-10HDT	14-16	2.00-1.30	5.72	.225	9.53	.375
19126-0018	B-817-10HDXT	14-16	2.00-1.30	5.72	.225	7.14	.281
19127-0074	C-8101-08T	10-12	5.25-3.30	5.72	.225	9.53	.375
19127-0075	C-8101-08XT	10-12	5.25-3.30	5.72	.225	9.53	.375
19127-0078	C-8104-06T	10-12	5.25-3.30	5.72	.225	9.53	.375
19127-0080	C-8104-06XT	10-12	5.25-3.30	5.72	.225	9.53	.375
19127-0084	C-817-06T	10-12	5.25-3.30	5.72	.225	9.53	.375
19127-0085	C-817-06XT	10-12	5.25-3.30	5.72	.225	9.53	.375
19127-0087	C-817-08T	10-12	5.25-3.30	5.72	.225	9.53	.375
19127-0088	C-817-08XT	10-12	5.25-3.30	5.72	.225	9.53	.375
19127-0090	C-817-10T	10-12	5.25-3.30	5.72	.225	9.53	.375
19127-0092	C-817-10XT	10-12	5.25-3.30	5.72	.225	9.53	.375
19131-0003	C-2105-08XT	10-12	5.25-3.30	6.35	.250	9.53	.375
19131-0005	C-2105-06XT	10-12	5.25-3.30	6.35	.250	9.53	.375
19131-0058	C-2102-08XT	10-12	5.25-3.30	6.35	.250	9.53	.375
19131-0059	C-2105-10XT	10-12	5.25-3.30	6.35	.250	9.53	.375
19131-0060	C-2481-08XT	10-12	5.25-3.30	6.35	.250	9.53	.375
19131-0061	C-2481-10XT	10-12	5.25-3.30	6.35	.250	9.53	.375
19137-0036	C-5102-08T	10-12	5.25-3.30	5.72	.225	9.53	.375
19137-0039	C-5105-06T	10-12	5.25-3.30	5.72	.225	9.53	.375
19139-0058	C-8102-08T	10-12	5.25-3.30	5.72	.225	9.53	.375
19139-0059	C-8102-08XT	10-12	5.25-3.30	5.72	.225	9.53	.375
19142-0038	B-241-10HDXT	14-16	2.00-1.30	6.35	.250	7.94	.313
19142-0074	B-241-06HDXT	14-16	2.00-1.30	6.35	.250	7.94	.313
19142-0075	B-241-08HDXT	14-16	2.00-1.30	6.35	.250	7.94	.313
19143-0060	B-641-06HDXT	14-16	2.00-1.30	6.35	.250	9.53	.375
19143-0062	B-641-08HDXT	14-16	2.00-1.30	6.35	.250	9.53	.375
19143-0064	B-641-10HDXT	14-16	2.00-1.30	6.35	.250	9.53	.375
19144-0038	C-241-06XT	10-12	5.25-3.30	6.35	.250	9.53	.375
19144-0041	C-241-08XT	10-12	5.25-3.30	6.35	.250	9.53	.375
19144-0043	C-241-10XT	10-12	5.25-3.30	6.35	.250	9.53	.375
19144-0044	C-268-14XT	10-12	5.25-3.30	6.35	.250	9.53	.375
19145-0076	C-6102-08XT	10-12	5.25-3.30	6.35	.250	9.53	.375
19145-0079	C-6105-06XT	10-12	5.25-3.30	6.35	.250	9.53	.375
19145-0083	C-641-06XT	10-12	5.25-3.30	6.35	.250	9.53	.375
19145-0086	C-641-08XT	10-12	5.25-3.30	6.35	.250	9.53	.375
19145-0089	C-641-10XT	10-12	5.25-3.30	6.35	.250	9.53	.375
19154-0027	C-246OVT	10-12	5.25-3.30	5.72	.225	5.95	0.234
19154-0030	C-246XT	10-12	5.25-3.30	5.72	.225	5.95	0.234
19179-0015	C-211-06XT	10-12	5.25-3.30	6.35	.250	9.53	.375
19179-0017	C-211-08XT	10-12	5.25-3.30	6.35	.250	9.53	.375
19179-0020	C-211-10XT	10-12	5.25-3.30	6.35	.250	9.53	.375
19183-0014	C-811-06T	10-12	5.25-3.30	5.72	.225	9.53	.375
19183-0015	C-811-06XT	10-12	5.25-3.30	5.72	.225	9.53	.375
19183-0017	C-811-08T	10-12	5.25-3.30	5.72	.225	9.53	.375
19183-0018	C-811-08XT	10-12	5.25-3.30	5.72	.225	9.53	.375
19183-0020	C-811-10T	10-12	5.25-3.30	5.72	.225	9.53	.375
19183-0021	C-811-10XT	10-12	5.25-3.30	5.72	.225	9.53	.375
19183-0024	C-899-14T	10-12	5.25-3.30	5.72	.225	9.53	.375
19183-0025	C-899-14XT	10-12	5.25-3.30	5.72	.225	7.14	.281
19184-0002	C-511-06T	10-12	5.25-3.30	5.87	.231	9.53	.375
19184-0004	C-511-08T	10-12	5.25-3.30	5.87	.231	9.53	.375
19184-0006	C-511-10T	10-12	5.25-3.30	5.87	.231	9.53	.375
19196-0045	B-541-06HDT	14-16	2.00-1.30	5.87	.231	9.53	.375
19196-0047	B-541-08HDT	14-16	2.00-1.30	5.87	.231	9.53	.375
19196-0049	B-541-10HDT	14-16	2.00-1.30	5.87	.231	9.53	.375
19196-0067	C-541-08T	10-12	5.25-3.30	5.87	.231	9.53	.375
19196-0070	C-541-10T	10-12	5.25-3.30	5.87	.231	9.53	.375
19196-0076	C-541-06T	10-12	5.25-3.30	5.87	.231	9.53	.375
19197-0018	B-841-06HDT	14-16	2.00-1.30	5.72	.225	9.53	.375
19197-0019	B-841-06HDXT	14-16	2.00-1.30	5.72	.225	9.53	.375
19197-0021	B-841-08HDT	14-16	2.00-1.30	5.72	.225	9.53	.375
19197-0022	B-841-08HDXT	14-16	2.00-1.30	5.72	.225	9.53	.375
19197-0025	B-841-10HDT	14-16	2.00-1.30	5.72	.225	9.53	.375
19197-0026	B-841-10HDXT	14-16	2.00-1.30	5.72	.225	9.53	.375
19198-0040	C-8105-06T	10-12	5.25-3.30	5.72	.225	9.53	.375
19198-0041	C-8105-06XT	10-12	5.25-3.30	5.72	.225	9.53	.375
19198-0042	C-8105-08T	10-12	5.25-3.30	5.72	.225	9.53	.375
19198-0043	C-8105-10T	10-12	5.25-3.30	5.72	.225	9.53	.375
19198-0045	C-841-06T	10-12	5.25-3.30	5.72	.225	9.53	.375
19198-0046	C-841-06XT	10-12	5.25-3.30	5.72	.225	9.53	.375
19198-0048	C-841-08T	10-12	5.25-3.30	5.72	.225	9.53	.375
19198-0049	C-841-08XT	10-12	5.25-3.30	5.72	.225	9.53	.375
19198-0051	C-841-10T	10-12	5.25-3.30	5.72	.225	9.53	.375
19198-0052	C-841-10XT	10-12	5.25-3.30	5.72	.225	9.53	.375
19212-0002	WP-2210XT	10-12	5.25-3.30	6.35	.250	7.14	.281
19213-0002	WP-5210T	10-12	5.25-3.30	5.59	.220	7.14	.281
19213-0008	WP-8210T	10-12	5.25-3.30	5.72	.225	7.14	.281

DEFINITION OF TERMS

The following illustrations are a generic terminal representation and not an exact image of any terminal listed in the scope.

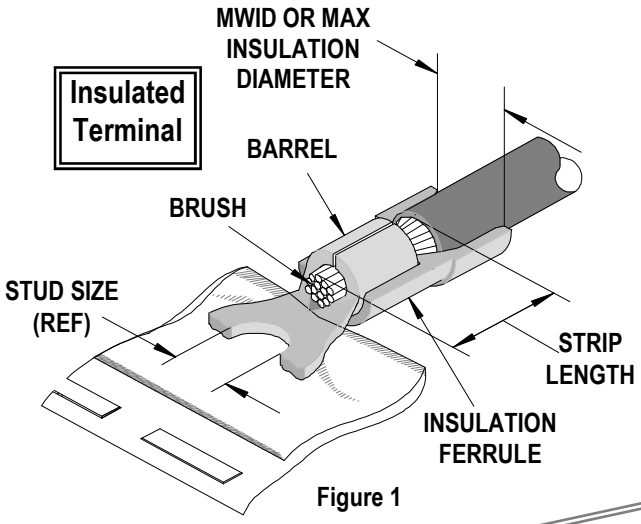

Figure 1

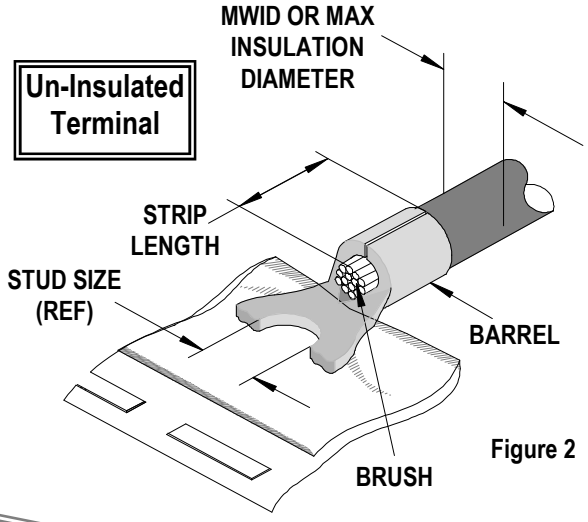

Figure 2

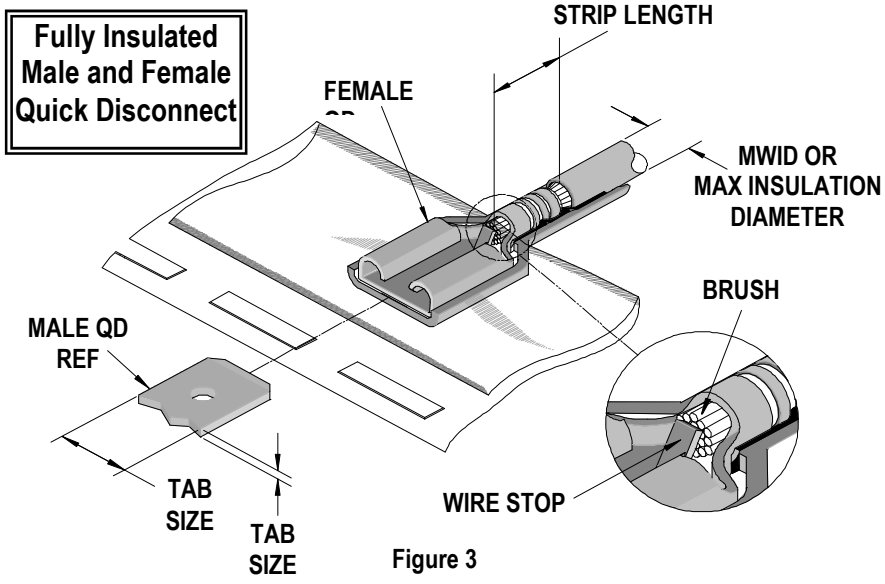

Figure 3

Tool Calibration

To recalibrate this applicator, make sure the power is completely shut off on the press.

1. The Mini-Mac applicator must be properly installed in the press.
2. Crimping dies must be properly installed in the Mini-Mac applicator.
3. The recommended method of measuring the crimp height of the conductor dies is the soft metal slug method, (See Figure 4).
4. The slug must have a diameter 0.51mm (.020") larger than the "X" No Go dimension before crimping.
5. Place the soft metal slug (solder) into the nest of the bottom die and crimp (by hand cycling the press) similar to a terminal. The crimp height can be measured with a blade type micrometer or dial caliper, (Dimension "X").
6. Adjustment of the crimp height can be accomplished by indexing the conductor cam. The letter "A" gives the loosest position and "K" gives the tightest position. A total adjustment of 0.50mm (.020") can be achieved by adjusting the conductor cam.

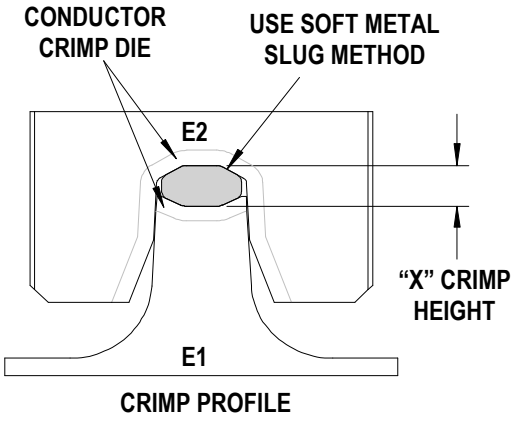

Use soft metal slug (solder) method to measure the "X" dimension. Verify tooling crimp height calibration by referring to the Go/No Go dimensions shown in the chart below.

Figure 4

Note: If the crimp height is too tight on the setting "A", check the shut height of the press. See the Industrial Mini-Mac Applicator Manual Section 2.1 for adjustments.

CRIMP SPECIFICATIONS

Wire Size		"X" Dimension Conductor Crimp						Pull Force Minimum	
AWG	mm²	Mean		Go		No Go		Lbs	N
		In	mm	In	mm	In	mm		
16	1.30	.160	4.06	.157	3.99	.168	4.27	30.0	133.5
14	2.00	.160	4.06	.157	3.99	.168	4.27	50.0	222.4
12	3.30	.160	4.06	.157	3.99	.168	4.27	70.0	311.4
10	5.25	.160	4.06	.157	3.99	.168	4.27	80.0	355.9

- Tool Qualification Notes:

1. Pull Force should be measured with no influence from the insulation crimp.
2. The above specifications are guidelines to an optimum crimp.

PARTS LIST

Mini-Mac Applicator 63885-1500				
Item	**Order No**	**Engineering No.**	**Description**	**Quantity**
Perishable Tooling				
	63885-1570	63885-1570	Tool Kit (All "Y" Items)	REF
1	63465-0015	63465-0015	Conductor Punch	1 Y
2	63464-0015	63464-0015	Conductor Anvil	1 Y
3	63463-0012	63463-0012	Insulation Punch	1 Y
4	63462-0016	63462-0016	Insulation Anvil	1 Y
Other Components				
5	63443-0021	63443-0021	Lower Tooling Key	1
6	63466-0912	63466-0912	Anvil Mount	1
7	63466-0913	63466-0913	Terminal Support	1
8	63466-0921	63466-0921	Terminal Stripping Blade	1
9	63600-1290	63600-1290	Washer	1
10	63890-0866	63890-0866	Collar-6.4mm Long	1
11	63890-0867	63890-0867	Collar-7.7mm Long	1
Frame				
12	63801-3301	63801-3301	Air Feed Applicator Frame Head	1
13	63801-3281	63801-3281	Base	1
14	63801-5850	63801-5850	Track Assembly	1
15	63801-3390	63801-3390	Air Kit	1
Hardware				
16	N/A	N/A	M3 by 12 Long SHCS	1**
17	N/A	N/A	M4 by 10 Long SHCS	2**
18	N/A	N/A	M4 by 16 Long SHCS	1**
19	N/A	N/A	M4 by 45 Long SHCS	1**
20	N/A	N/A	M8 by 30 Long BHCS	1**
21	N/A	N/A	3mm by 6 Long Roll Pin	1**
** Available from an industrial supply company such as MSC (1-800-645-7270).				

Note: Crimp profiles used in 63885-1500 are equivalent to 19032-0190/MMT-C-530, 19032-0127, and 19288-0179/ATP-C-530 (UL file number E32244).

Assembly Drawing

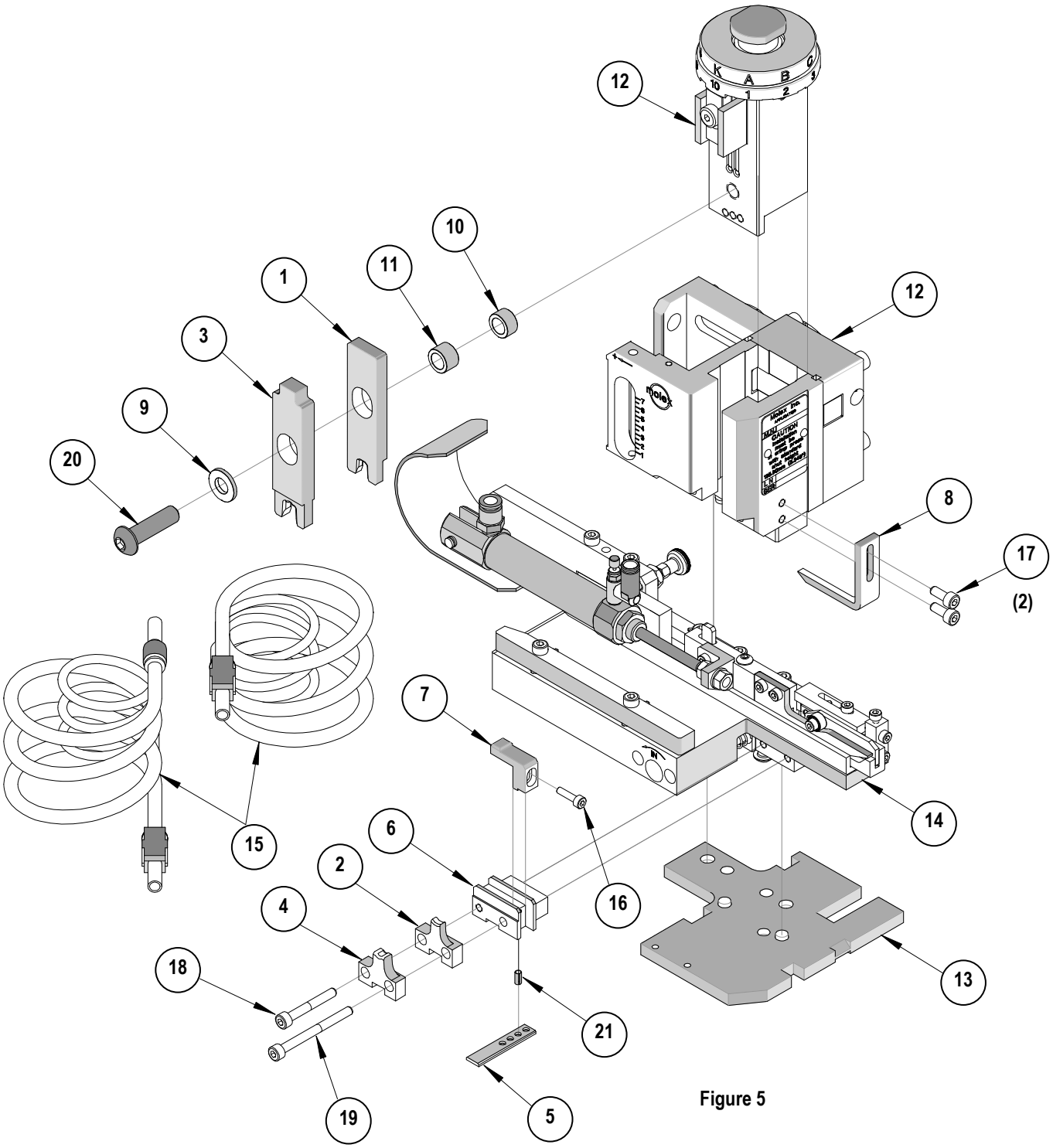

Figure 5

NOTES

1. Molex recommends an extra perishable tooling kit be maintained at your facility.
2. Verify tooling alignment by manually cycling the press with applicator before crimping under power. Check that all screws are tight.
3. Slugs, terminals, dirt, and oil should be kept clear of work area.
4. Wear safety glasses at all times.
5. For recommended maintenance refer to the Mini-Mac Applicator Manual (Document no. 63880-0000).

CAUTION: This applicator should only be used in a press with a shut height of 135.80 mm (5.346"). Tooling damage could result at a lower setting.

CAUTION: To prevent injury, never operate this applicator without the guards supplied with the press or wire-processing machine in place. Reference the press or wire processing manufacturer's instruction manual.

CAUTION: Molex crimp specifications are valid only when used with Molex terminals, applicators and tooling.

Contact Information

For more information on Molex application tooling please contact Molex at 1-800-786-6539.

Visit our Web site at http://www.molex.com