Modular Crimp Tooling Kit

molex

Application Tooling Specification Sheet

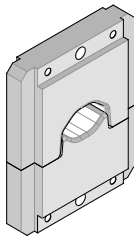

Order No. 64003-7970

SCOPE

Tooling: The Square "DIN" style die sets are used with two machines and each machine requires an adapter for the square "DIN" dies. The Molex UP60, order number 63801-8900 will process the square "DIN" style die sets with the 63801-8901 adapter. The Molex 12 ton battery crimp tool, order number 63816-1000 will process the square "DIN" style die sets with the 63816-1100. Refer to the appropriate crimper instruction manual for installation and operation information.

Products: BCL and VersaKrimp™ Un-insulated Ring Tongue Terminals and Splices 2 AWG. Refer to the Product part number charts on this sheet for terminals with the barrel and tongue styles listed above.

TESTING

The tensile test or pull test is a means of evaluating the mechanical properties of the crimped connections. The following charts show the UL specifications for various wire sizes. The tensile strength is shown in pounds and indicates the minimum acceptable force to break or separate the terminal from the conductor.

Wire Size (AWG)	*UL - 486 A	*UL - 486 C	**MIL-T-7928
1/0	200	---	650
2/0	180	---	550

*UL - 486 A - Terminals (Copper Conductors only)
*UL - 486 C – Butt Splices, Parallel Splices, and Closed end Connectors
**MIL-T-7928 - Military Approved Terminals only as listed

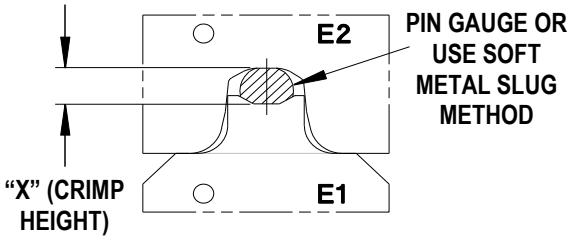

CRIMP PROFILE

Use gauge pins or soft metal slug (solder) method to measure the "X" dimension. Verify the tooling crimp height calibration by referring to the Go/No Go dimensions shown in the chart below.

Molex does not sell gauge pins. Contact your local industrial supplier.

Wire Range		"X" Dimension Conductor Crimp					
		Mean		Go		No Go	
AWG	mm²	In	mm	In	mm	In	mm
✶1	-	.275	6.99	.269	6.83	.281	7.14
2	-	.275	6.99	.269	6.83	.281	7.14

✶BCL Non-Insulated Products Only

The following is a Partial List of the Product Part Numbers and their specifications that this tooling is designed to crimp. We will be adding to this list and an up to date copy is available on www.molex.com.

Wire Size: 1 AWG			
Terminal No.	Terminal Eng. No. (REF)	Wire Strip Length	
		In	mm
19215-0063	BCL-1	.656	16.66
19221-0237	BCL-1516-PL	.656	16.66
19221-0238	BCL-138-PL	.656	16.66
19221-0239	BCL-112-PL	.656	16.66
19221-0378	BCL-138	.656	16.66
19221-0395	BCL-112	.656	16.66
19221-0396	BCL-1516	.656	16.66
19221-0420	BCL-114-PL	.656	16.66
19221-0421	BCL-114	.656	16.66
19221-0580	BCL-138-WP	.656	16.66
19221-0581	BCL-138-WP-PL	.656	16.66
19221-0594	BCL-110	.656	16.66
19221-0595	BCL-110-PL	.656	16.66
19231-1005	BCL-138-SH	.656	16.66
19231-1006	BCL-138-SH-PL	.656	16.66
19231-1007	BCL-112-SH	.656	16.66
19231-1008	BCL-112-SH-PL	.656	16.66

Wire Size: 2 AWG			
Terminal No.	Terminal Eng No. (REF)	Wire Strip Length	
		In	mm
19193-0297	G-374-14	.578	14.68
19193-0298	G-374-38	.578	14.68
19193-0299	G-374-56	.578	14.68
19193-0301	G-374-58	.578	14.68
19193-0306	G-375-14R90	.578	14.68
19193-0308	G-375-38R90	.578	14.68
19193-0310	G-375-56R90	.578	14.68
19193-0311	G-375-76	.578	14.68
19193-0312	G-376-12	.578	14.68
19193-0313	G-376-14	.578	14.68
19193-0314	G-376-38	.578	14.68
19193-0315	G-376-56	.578	14.68
19193-0316	G-376-58	.578	14.68
19193-0317	G-376-76	.578	14.68
19193-0318	G-377-12	.578	14.68
19193-0319	G-377-14	.578	14.68
19193-0320	G-377-34	.578	14.68

Wire Size: 2 AWG			
Terminal No.	Terminal Eng No. (REF)	Wire Strip Length	
		In	mm
19193-0321	G-377-38	.578	14.68
19193-0322	G-377-56	.578	14.68
19193-0324	G-377-76	.578	14.68
19193-0611	G-377-58	.578	14.68
19193-0626	G-374-56R90	.578	14.68
19205-0008	G-373	.578	14.68
19215-0046	G-372	.531	13.49
19215-0062	BCL-2	.594	15.09
19221-0233	BCL-2516-PL	.594	15.09
19221-0235	BCL-238-PL	.594	15.09
19221-0236	BCL-212-PL	.594	15.09
19221-0380	BCL-238	.594	15.09
19221-0399	BCL-212	.594	15.09
19221-0400	BCL-2516	.594	15.09
19221-0418	BCL-214-PL	.594	15.09
19221-0419	BCL-214	.594	15.09
19221-0564	BCL-238-WP	.594	15.09
19221-0565	BCL-238-WP-PL	.594	15.09
19231-0001	BCL-238-SH	.594	15.09
19231-0002	BCL-238-SH-PL	.594	15.09
19231-0003	BCL-238-WP-SH	.594	15.09
19231-0004	BCL-212-WP-SH-PL	.594	15.09

MILITARY Wire Size: 2 AWG			
Terminal No.	Terminal Eng No. (REF)	Wire Strip Length	
		In	mm
19193-0296	G-374-12	.578	14.68
19193-0302	G-374-76	.578	14.68
19193-0303	G-375-10	.578	14.68
19193-0305	G-375-14	.578	14.68
19193-0307	G-375-38	.578	14.68
19193-0309	G-375-56	.578	14.68

CAUTION: Install only Molex terminals listed above with this kit. Do not crimp hardened objects as damage can occur to the tool or die.

CAUTION: Molex specifications are valid only when used with Molex tooling.

Crimp Tooling Kit Parts List

Item Number	Order Number	Description	Quantity
	64003-7970	**Crimp Tooling Kit – 1 and 2 AWG Un-insulated**	**REF**
1	64003-7901	Anvil	1
2	64003-7902	Punch	1

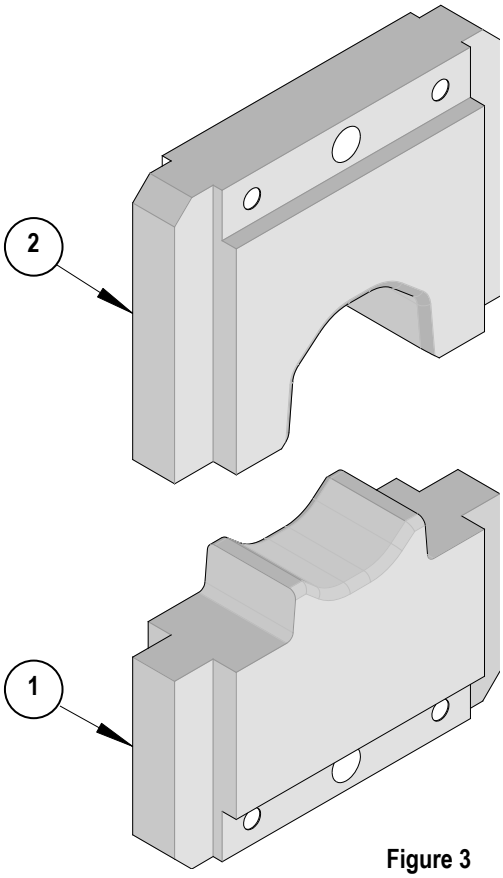

Figure 3

Visit our Web site at http://www.molex.com