ServiceGrade™ Hand Crimp Tool
Specification Sheet
Order No. 64016-0201

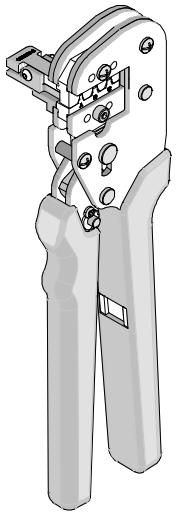

FEATURES

- A full cycle ratcheting hand tool ensures complete crimps
- Ergonomic soft grip handles for comfortable crimping
- For crimps conforming to WHMA-IPCA620 Class 2, use hand crimp tools 11-01-0209, 11-01-0185, 63811-2800, 63811-5200, and / or 63811-8700

SCOPE

Products: C-Grid SL™, SPOX™, Micro Fit ™, and 0.100" KK™ Terminals, 20-36 AWG.

C-Grid SL™
(WHMA-IPCA620 equivalent hand tools: 63811-8700, 11-01-0209)

Terminal Series No.	Terminal Order No.				Wire Size		Insulation Diameter		Strip Length	
	Loose Piece		Reel		AWG	mm²	mm	In.	mm	In.
50087	50087-8130	50087-8160	50087-8030	50087-8060	24-30	0.13-0.05	1.01-1.52	.040-.060	2.54-3.17	.100-.125
50088	50088-8128	50088-8160	50088-8028	50088-8060	22-24	0.35-0.2	1.09-1.70	.043-.067	2.54-3.17	.100-.125
70021	16-02-0114	40-08-0873	16-02-0081	16-02-0116	22-24	0.35-0.2	1.09-1.70	.043-.067	2.54-3.17	.100-.125
	16-02-0115	70021-0114	16-02-0093	40-08-0874						
	16-02-0117	70021-0117	16-02-0107	70021-0081						
	16-02-0108	40-08-0872	16-02-0077	16-02-0105	24-30	0.13-0.05	1.01-1.52	.040-.060	2.54-3.17	.100-.125
	16-02-0109		16-02-0078	40-08-0871						
	16-02-0110		16-02-0091							
	16-02-0111	16-02-0113	16-02-0079	16-02-0092	32-36	0.03-0.01	0.43-0.64	.017-.025	2.54-3.17	.100-.125
	16-02-0112		16-02-0080	16-02-0106						
70058	16-02-0102	70058-0102	16-02-0086	16-02-0152	22-24	0.35-0.2	1.09-1.70	.043-.067	2.54-3.17	.100-.125
	16-02-0103	70058-0103	16-02-0087	70058-5001						
	16-02-0104	70058-0104	16-02-0088	70058-0086						
	16-02-0147		16-02-0131	70058-0088						
	16-02-0097	70058-0096	16-02-0069	16-02-0150	24-30	0.13-0.05	1.01-1.52	.040-.060	2.54-3.17	.100-.125
	16-02-0096	70058-0097	16-02-0082	70058-0069						
	16-02-0098		16-02-0083	70058-0082						
	16-02-0140		16-02-0137	70058-0083						
	16-02-0151		16-02-0139							
	16-02-0099	16-02-0144	16-02-0074	16-02-0143	32-36	0.03-0.01	0.43-0.64	.017-.025	2.54-3.17	.100-.125
	16-02-0100	70058-0084	16-02-0084	70058-0084						
	16-02-0101		16-02-0085							
71851	16-02-1114	71851-1114	16-02-1110		22-24	0.35-0.2	1.09-1.70	.043-.067	2.54-3.17	.100-.125
	16-02-1115	71851-1115	16-02-1111							
	16-02-1125		16-02-1124							
	16-02-1109	16-02-0117	16-02-0112	16-02-1119	24-30	0.13-0.05	1.01-1.52	.040-.060	2.54-3.17	.100-.125
	16-02-0116		16-02-0113							
	16-02-0119	16-02-0123	16-02-0118	16-02-00122	32-36	0.03-0.01	0.43-0.64	.017-.025	2.54-3.17	.100-.125
	16-02-0121		16-02-0120							

0.100" KK®
(WHMA-IPCA620 equivalent hand tool: 11-01-0185)

Terminal Series No	Terminal Order No				Wire Size		Insulation Diameter		Strip Length	
	Loose Piece		Reel		AWG	mm²	mm	In.	mm	In.
2759	08-50-0114	08-55-0131	08-50-0113	08-55-0126	22-30	0.35-0.05	1.02-1.57	.040-.062	2.54-3.17	.100-.125
	08-50-0124	08-56-0110	08-50-0159	08-55-0130						
	08-50-0160	39-00-0377	08-50-0273	08-56-0109						
	08-50-0275	39-00-0379	08-50-0274	39-00-0376						
	08-51-0102	39-00-0381	08-51-0101	39-00-0378						
			08-51-0108	39-00-0380						
	08-55-0102	50-29-1638	08-55-0101	50-29-1757						
40445	08-50-0322	97-00-0921	08-50-0321	97-00-0920	22-30	0.35-0.05	1.02-1.57	.040-.062	2.54-3.17	.100-.125
	97-00-0445		97-00-0444							
41572	08-65-0805		08-65-0804		22-30	0.20-0.05	1.02-2.29	.040-.090	2.54-3.17	.100-.125
4809	08-50-0032		08-50-0030	08-56-0120	22-30	0.35-0.05	1.02-1.57	.040-.062	2.54-3.17	.100-.125
	08-55-0111		08-50-0031	97-00-0001						
	08-56-0115		08-55-0110	97-00-0450						
	97-00-0451		08-55-0112							
5159	08-70-0049	08-70-0069	08-70-0048	08-70-0064	22-28	0.35-0.08	1.20-1.70	.040-.090	2.54-3.17	.100-.125
5241	08-70-0103		08-70-0102		22-28	.035-0.08	1.15-1.90	.045-.075	2.54-3.17	.100-.125
6459	08-52-0122	08-65-0816	08-52-0101	08-65-0811	22-30	0.35-0.05	1.02-1.57	.040-.062	2.54-3.17	.100-.125
	08-52-0123		08-52-0118	08-65-0813						
	08-65-0812		08-52-0121	08-65-0815						
	08-65-0814		08-65-0801	08-65-0817						
7879	08-50-0005	50-29-1745	08-50-0004	50-29-1635	22-30	0.35-0.05	1.02-1.57	.040-.062	2.54-3.17	.100-.125
	08-55-0127		08-55-0124	50-29-1744						
	08-55-0129		08-55-0128	50-29-1900						
8088	08-52-0104	97-00-0226	08-52-0103	97-00-0225	22-30	0.35-0.05	1.02-1.57	.040-.062	2.54-3.17	.100-.125
	08-65-0106	97-00-0228	08-65-0105	97-00-0227						

Micro Fit®
(WHMA-IPCA620 equivalent hand tool: 63811-2800)

Terminal Series No	Terminal Order No				Wire Size		Insulation Diameter		Strip Length	
	Loose Piece		Reel		AWG	mm²	mm	In.	mm	In.
43030	43030-0007	43030-0053	43030-0001		20-24	0.50-0.20	1.42-1.85	.056-.073	2.54-2.92	.100-.115
	43030-0008	43030-0057	43030-0002							
	43030-0009	43030-0058	43030-0003							
	43030-0052	43030-0059	43030-0051							
	43030-0010	43030-0012	43030-0004	43030-0006	26-30	0.12-0.05	1.09-1.27	.043-.050	2.54-2.92	.100-.115
	43030-0011		43030-0005	43030-0056						
43031	43031-0007	43031-0009	43031-0001	43031-0003	20-24	0.50-0.20	1.42-1.85	.056-.073	2.54-2.92	.100-.115
	43031-0008		43031-0002							
	43031-0010	43031-0012	43031-0004	43031-0006	26-30	0.12-0.05	1.09-1.27	.043-.050	2.54-2.92	.100-.115
	43031-0011		43031-0005							

SPOX™ (WHMA-IPCA620 equivalent hand tool: 63811-5200)										
Terminal Series No.	Terminal Order No.				Wire Size		Insulation Diameter		Strip Length	
	Loose Piece		Reel		AWG	mm²	mm	In.	mm	In.
5103	08-70-0057	08-70-0059	08-70-0056	08-70-0058	22-28	0.35-0.08	1.15-1.90	.045-.075	3.30-3.80	.130-.150
5263	08-70-1040		08-70-1039	39-00-0159	22-28	0.35-0.08	1.15-1.90	.045-.075	3.30-3.80	.130-.150
	08-70-1046		08-70-1045	39-00-0160						
	39-00-0152		39-00-0151							
45627	45627-9002		45627-0002	45627-1002	22-24	0.35-0.20	1.15-1.90	.045-.075	3.30-3.80	.130-.150

Crimping Information:

Crimp the terminal and appropriate gauge wire in the specified profile.

Terminal Series No	Wire Size		Pull Force Min. ▼		Tool Crimp Profile		
	AWG	mm²	N	Lb.	A	B	C
50088, 70021, 70058, 71851	22	0.35	39.1	8.80	■		
	24	0.20	29.3	6.60	■		
50087, 70021, 70058, 71851	24	0.20	28.9	6.5		■	
	26	0.12	17.8	4.0		■	
	28	0.08	11.1	2.5		■	
	30	0.05	6.7	1.5		■	
70021, 70058, 71851	32	0.03	4.4	1.0			■
	34	0.02	2.6	0.6			■
	36	0.01	1.8	0.4			■
2759, 40445, 41572, 4809, 5159, 5241, 6459, 7879, 8088	22	0.35	44.5	10.0	■		
	24	0.20	28.9	6.5	■		
	26	0.12	17.8	4.0	■		
	28	0.08	11.1	2.5	■		
	30	0.05	6.7	1.5	■		
43030, 43031	20	0.50	57.8	13.0	■		
	22	0.35	35.6	8.0	■		
	24	0.20	22.2	5.0	■		
	26	0.12	13.3	3.0		■	
	28	0.08	8.9	2.0		■	
	30	0.05	6.7	1.5		■	
5103, 5263, 45627	22	0.35	44.5	10.0	■		
	24	0.20	28.9	6.5	■		
	26	0.12	17.8	4.0	■		
	28	0.08	11.1	2.5	■		
▼ Pull force test samples should not have the wire insulation crimped.							

OPERATION

CAUTION: Install only Molex terminals listed above with this tool. Do not crimp hardened objects as damage can occur to the tool or die.

Remove the terminal holder from the tool and set it aside.

Open the hand tool by squeezing the handles together; at the end of the closing stroke the anti-backup ratchet will release. Release the handles and the hand tool will open.

Crimping Terminals

1. Select the desired terminal listed in the preceding charts.
2. Open the terminal holder by pressing down the lever and place the terminal in the holder.

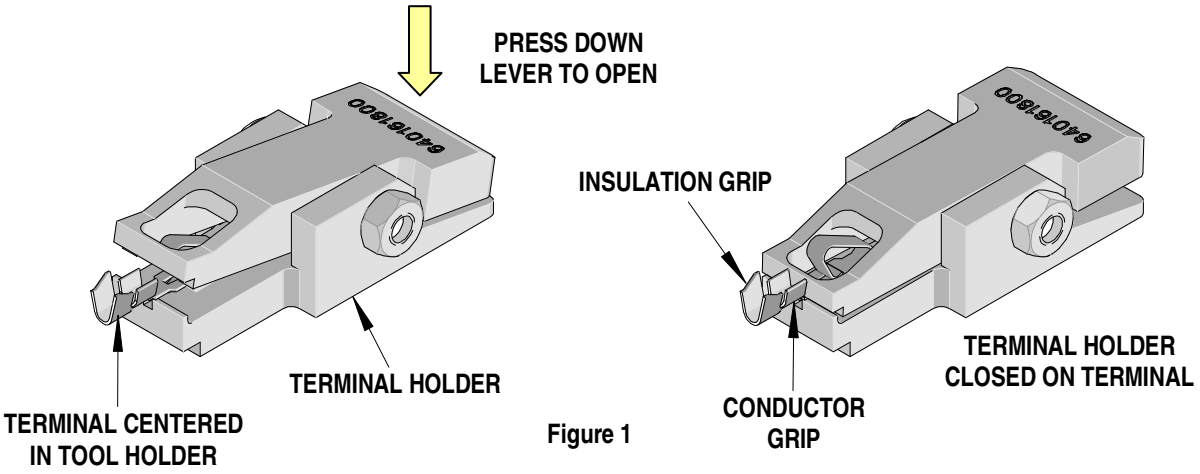

Figure 1

Note: The above illustration is a general representation. Some of the terminals may look different and be held in a different area of the terminal.

3. Release the lever to hold the terminal in place. See Figure 1.
4. Carefully place the terminal holder on the shelf of the hand tool and center the terminal as shown over the appropriate tool crimp profile. See Figure 2.

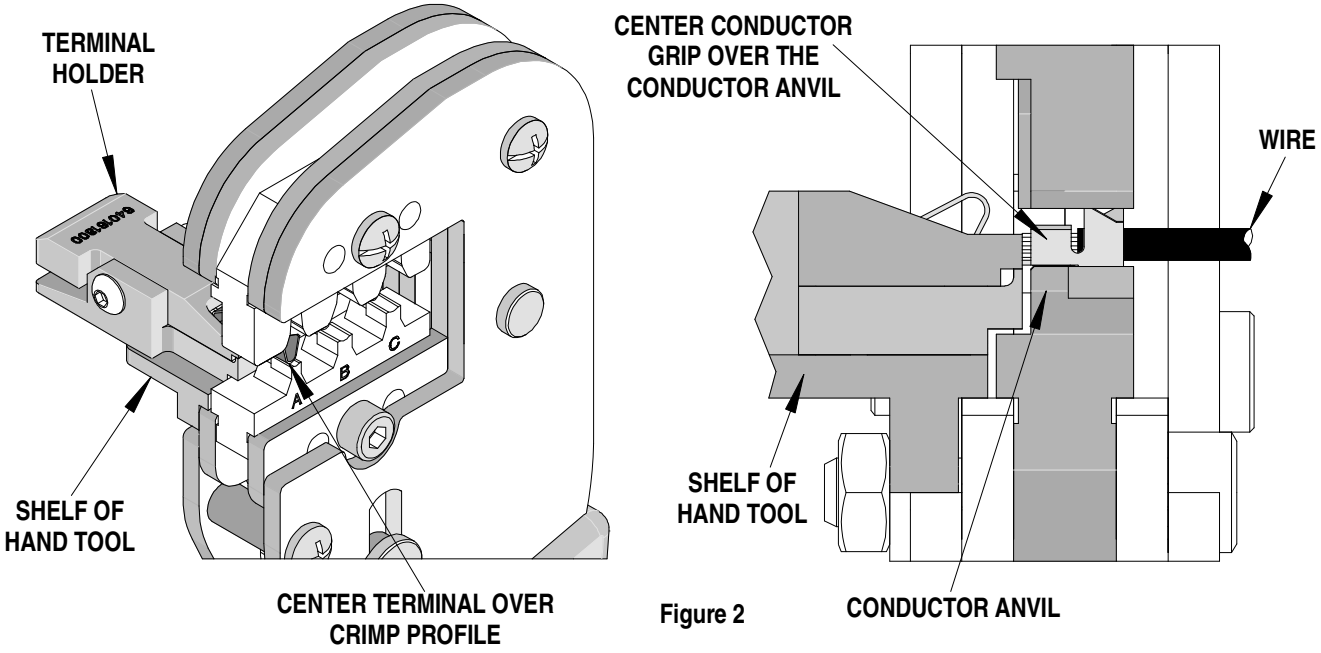

Figure 2

Note: Some terminals may have a large insulation grip; extra care should be taken when loading these terminals into the tool to avoid terminal damage.

5. Place a pre-stripped wire into the terminal (see Scope chart for recommended strip lengths). Position the wire so the conductor lies in the conductor grip.
6. While holding the wire in place, slowly close the handles of the tool. If excessive resistance is felt, there may be a jam. If this occurs, stop closing the tool and release the anti-backup ratchet by lifting up the lever near the top of the moving handle. See figure 3.
7. Continue to close the tool handles until the anti-backup ratchet releases. Allow the handles to open.
8. Remove the crimped terminal and terminal holder from the tool.
9. Press down the lever on the terminal holder and remove the crimped terminal.
10. Inspect the crimp for loose wire strands, missing crimp, or other damage. Any minor terminal bending may be straightened by hand.

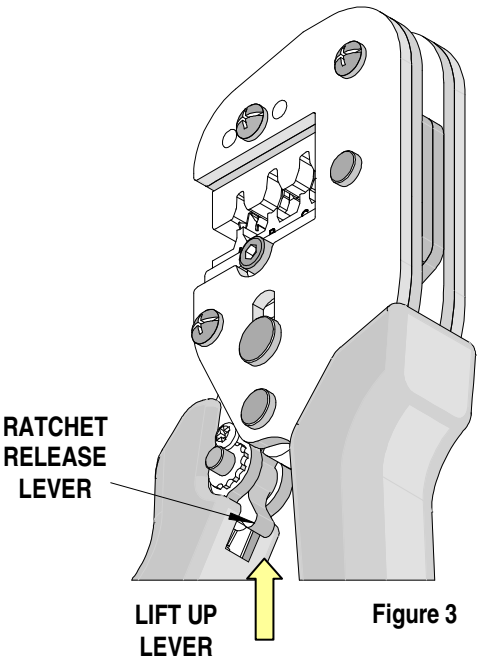

Figure 3

Note:

An occasional, destructive, pull force test with the terminal and wire crimped should be performed to check hand tool crimp. The pull force value must exceed the terminal's minimum pull force specifications listed on page 3. If values do not exceed the minimum pull force when all instructions are followed then a new tool is required.

Maintenance

It is recommended that each operator of the tool be made aware of, and responsible for, the following maintenance steps:

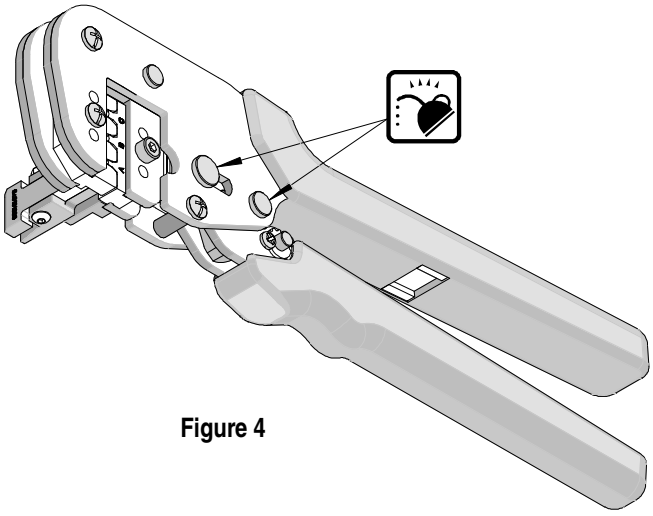
Figure 4

1. Remove dust, moisture, and other contaminants with a clean brush, or soft, lint free cloth.
2. Do not use any abrasive materials that could damage the tool.
3. Make certain all pins; pivot points and bearing surfaces are protected with a thin coat of high quality machine oil. Do not oil excessively. Light oil (such as SAE30W oil) applied at the oil points, shown in Figure 4, every 5,000 crimps or 3 months, is recommended.
4. Wipe excess oil from hand tool, particularly from crimping area. Oil transferred from the crimping area onto certain terminations may affect the electrical characteristics of an application.
5. When tool is not in use, keep the handles closed to prevent objects from becoming lodged in the crimping dies, and store the tool in a clean, dry area.

Miscrimps or Jams

If the tool ever becomes jammed in a partially closed position, **DO NOT** force the handles open or closed. The tool will open by lifting the ratchet release lever. See Figure 3.

Tool Handle Preload

Tool handle preload cannot be adjusted.

This hand tool is set to a preload that will fully close the tool jaws without excessive force from the operator. Over the life of the tool the tool linkage can wear and handle preload force may decrease. It is the operator's responsibility to periodically perform a tensile pull test on the crimped wire. If the pull test value falls below specification, the tool should be replaced.

Warranty

This tool is for electrical terminal crimping purposes only. All tools are warranted to be free of manufacturing defects for a period of 30 days. Should such a defect occur, the tool will be exchanged free of charge. This exchange will not be applicable to altered, misused, or damaged tools. This tool is designed for hand use only. Any clamping, fixturing, or use of handle extensions voids this warranty.

CAUTION: Molex crimp specifications are valid only when used with Molex terminals and tooling.

CAUTIONS:

1. Manually powered hand tools are intended for low volume or field repair. This tool is **NOT** intended for production use. Repetitive use of this tool should be avoided.
2. Insulated rubber handles are not protection against electrical shock. **NEVER** perform crimps on active electrical circuits.
3. Wear eye protection at all times.
4. Use only the Molex terminals specified for crimping with this tool.

Certification

Molex does not certify or re-certify ServiceGrade™ hand tools but rather supplies the following guidelines for customers to maintain their hand tools.

- This tool is qualified to pull force only. To re-certify, crimp a terminal to a wire, which has been stripped 12.7mm (1/2") long, so there is no crimping of the insulation. Pull the terminal and wire at a rate no faster than 25mm (1.00") per minute. See the Molex web site for the Quality Crimp Handbook for more information on pull testing.
- When the hand tool is no longer capable of achieving minimum pull force, it should be replaced.

Americas Headquarters
Lisle, Illinois 60532 U.S.A.
1-800-78MOLEX
amerinfo@molex.com

Far East North Headquarters
Yamato, Kanagawa, Japan
81-462-65-2324
feninfo@molex.com

Far East South Headquarters
Jurong, Singapore
65-6-268-6868
fesinfo@molex.com

European Headquarters
Munich, Germany
49-89-413092-0
eurinfo@molex.com

Corporate Headquarters
2222 Wellington Ct.
Lisle, IL 60532 U.S.A.
630-969-4550
Fax: 630-969-1352

Visit our Web site at http://www.molex.com