TM-3000™ Safety Guard Update
Installation Instructions
Order No. 64016-2510

FEATURES

- Required to operate the 64016-2000 Crimp Module in TM-3000™ presses manufactured before 2009
- May also be used as a replacement guard if the TM-3000™ or TM-4000™ guard is damaged or missing
- Sliding insert allows use with side-feed crimp applicators or Crimp Module

SCOPE

Applicable Presses: Molex TM-3000™ presses 63801-7200 (120VAC) and 63801-7300 (220VAC)
Molex TM-4000™ press 63801-7600 (220VAC)

Guard Installation

To install the guard update, follow the steps below.

Power down the press by pressing the power button to off "O" located on the control panel.

1. Swing the existing guard door open.

Note: Once the press guard is open the guard interlock switch will disconnect power to the motor.

2. Remove the (4) screws which hold the existing guard door to the hinges. See Figure 1.
3. With the existing guard door off the press, remove the (4) posts, and reinstall them on the new guard door.
4. Install the new guard door on the hinges.

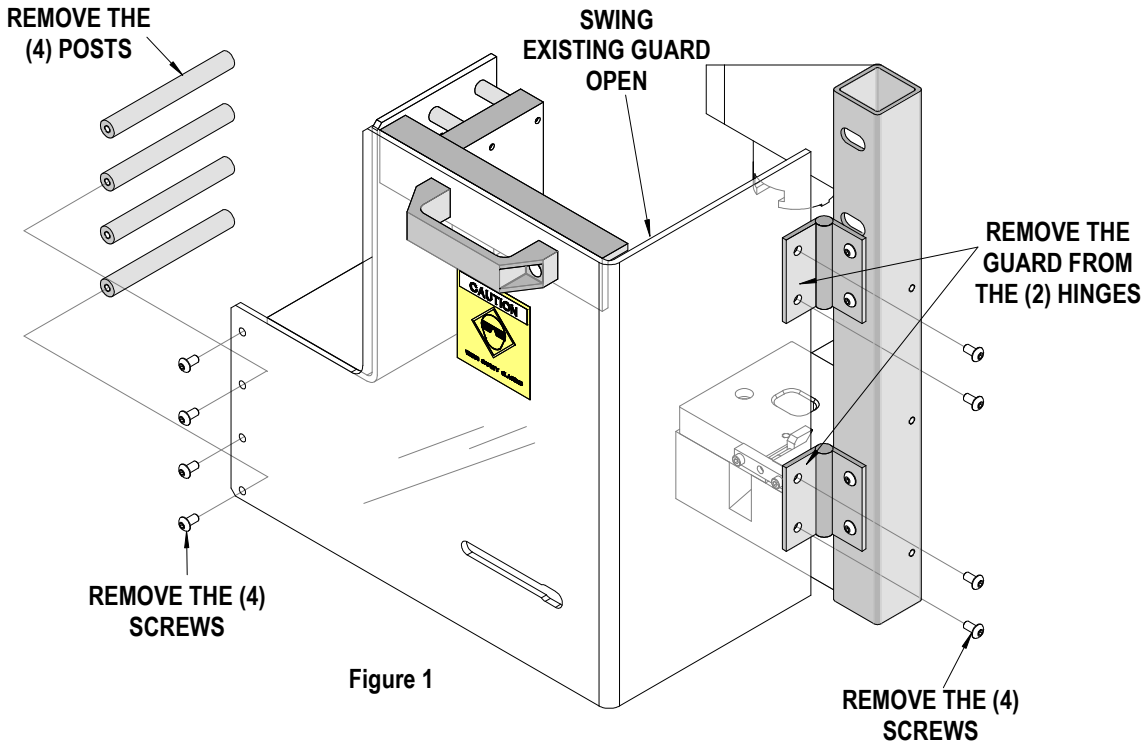

Figure 1

5. Check the operation of the guard door. The magnetic catch must hold the door closed. When the door is closed properly the safety switch will allow the press to operate. Some door adjustment may be necessary from the hinges.
6. To operate a Crimp Module, the guard insert must be in the down position. To move the guard insert, remove the center screw and move the insert down. Be sure to replace the center screw. See Figure 2.
7. To operate a standard side-feed (or rear-feed) applicator, the guard insert must be in the up position.

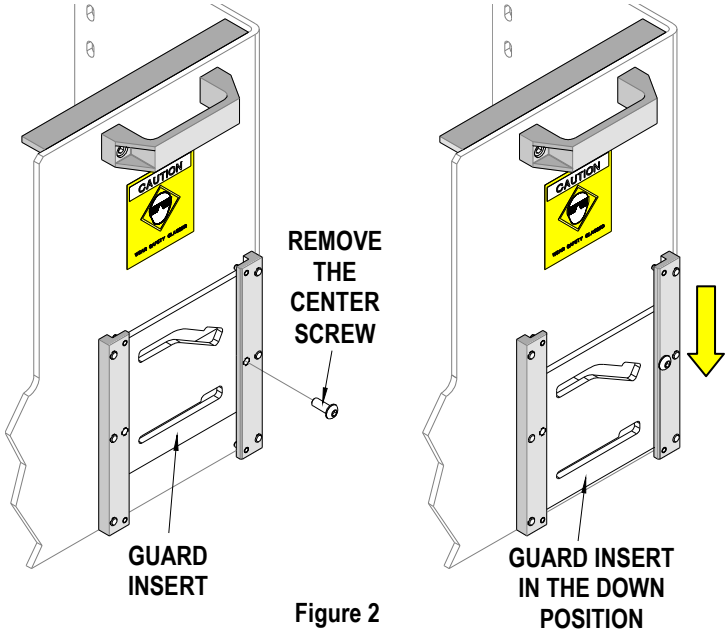

Figure 2

CAUTION: To prevent injury, never operate the press without the guards in place. Refer to the TM-3000™ and/or TM-4000™ instruction manuals.

Contact Information

For more information on Molex application tooling please contact Molex at 1-800-786-6539.

Americas Headquarters
Lisle, Illinois 60532 U.S.A.
1-800-78MOLEX
amerinfo@molex.com

Far East North Headquarters
Yamato, Kanagawa, Japan
81-462-65-2324
feninfo@molex.com

Far East South Headquarters
Jurong, Singapore
65-6-268-6868
fesinfo@molex.com

European Headquarters
Munich, Germany
49-89-413092-0
eurinfo@molex.com

Corporate Headquarters
2222 Wellington Ct.
Lisle, IL 60532 U.S.A.
630-969-4550
Fax: 630-969-1352

Visit our Web site at http://www.molex.com