Atmel AT42QT1245

24-key QMatrix FMEA IEC/EN/UL60730 Touch Sensor

PRELIMINARY DATASHEET

Features

- Number of keys:
  - Up to 24
- Technology:
  - Patented charge-transfer (transverse mode), with frequency hopping
- Key outline sizes:
  - 6 mm × 6 mm or larger (panel thickness dependent); different sizes and shapes possible
- Key spacings:
  - 8 mm or wider, center to center (panel thickness dependent)
- Electrode design:
  - Two-part electrode shapes (drive-receive); wide variety of possible layouts
- Layers required:
  - One layer (with jumpers), two layers (no jumpers)
- Electrode materials:
  - PCB, FPCB, silver or carbon on film, ITO on film
- Panel materials:
  - Plastic, glass, composites, painted surfaces (low particle density metallic paints possible)
- Panel thickness:
  - Up to 50 mm glass, 20 mm plastic (key size dependent)
- Key sensitivity:
  - Individually settable via simple commands over communication interface
- Interface:
  - SPI
- Signal processing:
  - Self-calibration, auto drift compensation, noise filtering, Adjacent Key Suppression® (AKS®) technology
- FMEA compliant design features
- IEC/EN/UL60730 compliant design features
  - UL approval
  - VDE compliance
  - For use in both class B and class C safety-critical products
- Detects and Reports Key Failure
- Power:
  - +3 V to 5 V
- Package:
  - 32-pin 7 × 7 mm TQFP RoHS compliant
  - 32-pin 5 × 5 mm QFN RoHS compliant

1. Pinout and Schematic

1.1 Pinout Configuration

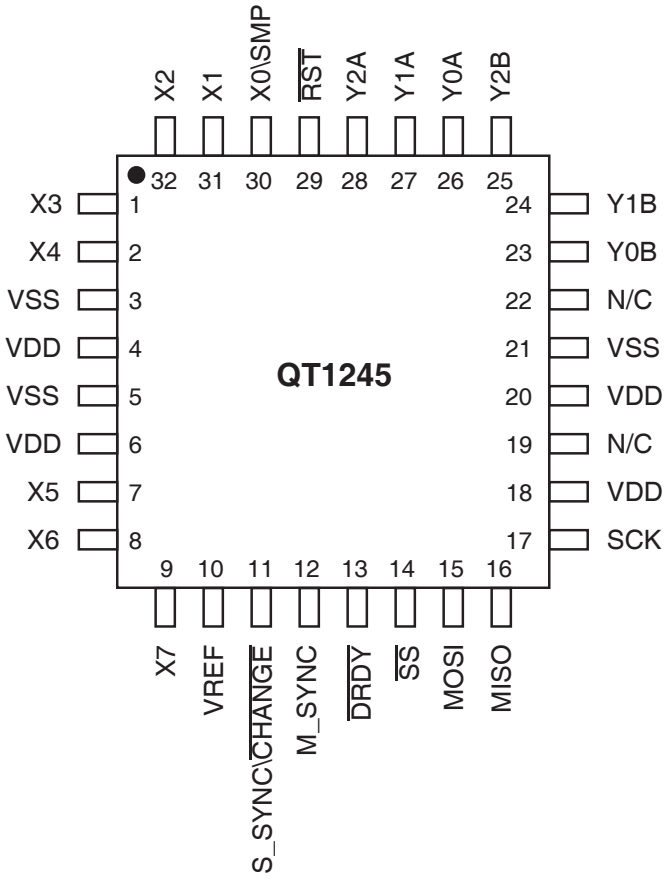

1.2 Pin Descriptions

Table 1-1. Pin Descriptions

Pin	Name	Type	Comments	If Unused, connect To...
1	X3	O	X matrix drive line	Leave open
2	X4	O	X matrix drive line	Leave open
3	VSS	P	Ground	–
4	VDD	P	Power	–
5	VSS	P	Ground	–
6	VDD	P	Power	–
7	X5	O	X matrix drive line	Leave open
8	X6	O	X matrix drive line	Leave open

Table 1-1. Pin Descriptions (Continued)

Pin	Name	Type	Comments	If Unused, connect To...
9	X7	O	X matrix drive line	Leave open
10	VREF	I	Connect to Vss	–
11	S_SYNC/ CHANGE	OD	Oscilloscope sync / Key touch change, active low. Has internal 20 kΩ – 50 kΩ pull-up resistor	Leave open
12	M_SYNC	I	Mains Sync input	Vdd
13	$\overline{\text{DRDY}}$	OD	It is essential to use this pin. 1 = SPI Comms ready. Need 40 µs grace period before checking. Has internal 20 kΩ – 50 kΩ pull-up resistor	–
14	$\overline{\text{SS}}$	I	SPI slave select; has internal 20 kΩ – 50 kΩ pull-up resistor	–
15	MOSI	I	SPI data input	–
16	MISO	O	SPI data output	–
17	SCK	I	SPI clock input	–
18	VDD	P	Power	–
19	N/C	I/O	Do not connect	Leave open
20	VDD	P	Power	–
21	VSS	P	Ground	–
22	N/C	I/O	Do not connect	Leave open
23	Y0B	I/O	Y line connection	Leave open
24	Y1B	I/O	Y line connection	Leave open
25	Y2B	I/O	Y line connection	Leave open
26	Y0A	I/O	Y line connection	Leave open
27	Y1A	I/O	Y line connection	Leave open
28	Y2A	I/O	Y line connection	Leave open
29	$\overline{\text{RST}}$	I	Reset low; has internal 30 kΩ – 60 kΩ pull-up resistor. This pin should be controlled by the host.	Leave open or Vdd
30	X0/SMP	O	X matrix drive line / Sample output	–
31	X1	O	X matrix drive line	Leave open
32	X2	O	X matrix drive line	Leave open

I	Input only	O	Output only, push-pull	I/O	Input and output
OD	Open-drain output	P	Ground or power		

1.3 Schematic

Figure 1-1. Typical Circuit

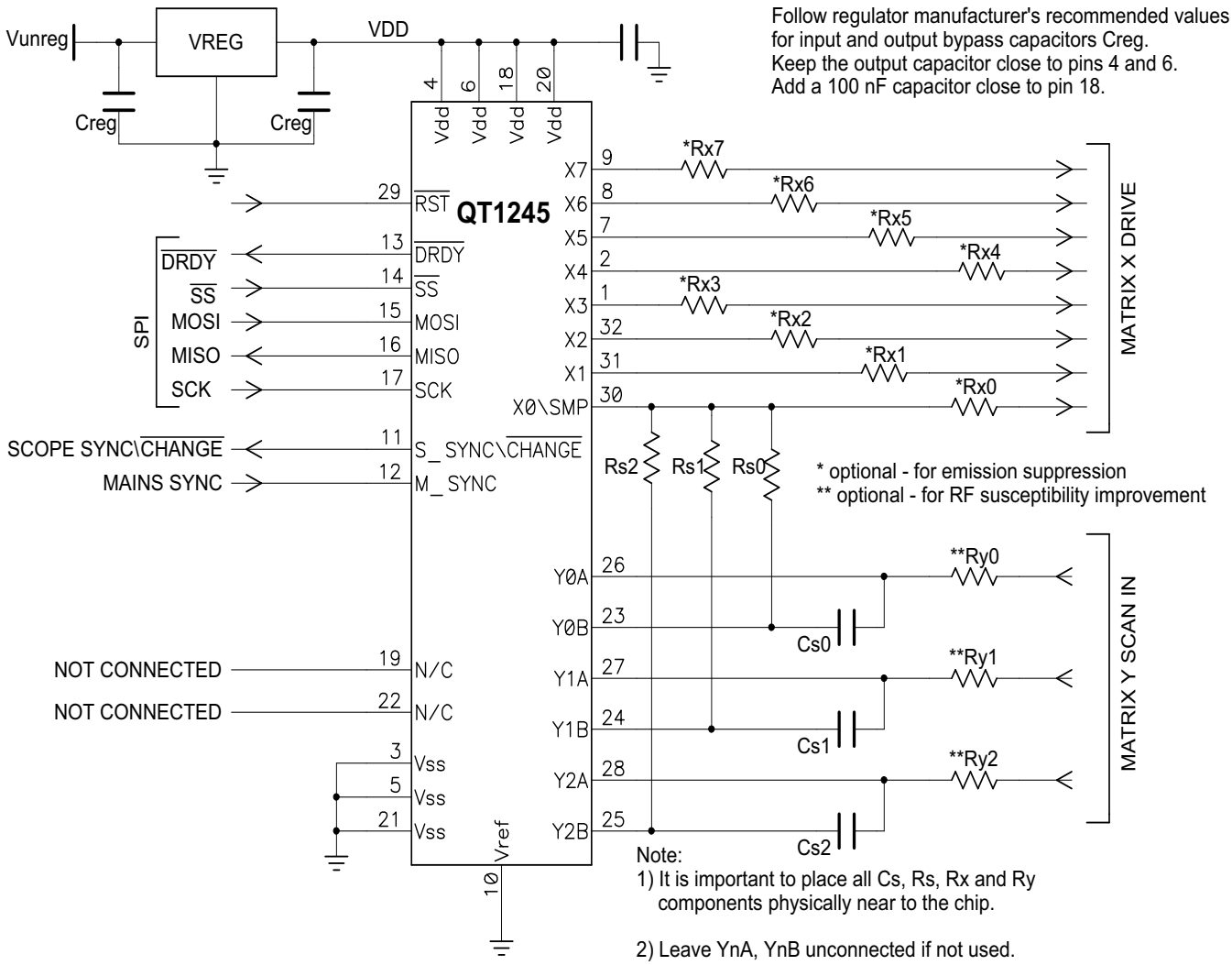

For component values in Figure 1-1 check the following sections:

- Section 3.3 on page 6: Cs capacitors (Cs0 – Cs2)
- Section 3.5 on page 8: Sample resistors (Rs0 – Rs2)
- Section 3.7 on page 8: Matrix resistors (Rx0 – Rx7, Ry0 – Ry2)
- Section 3.10 on page 11: Voltage levels

2. Overview

The AT42QT1245 (QT1245) device is a digital burst mode charge-transfer (QT™) sensor, designed specifically for matrix layout touch controls. It includes all signal processing functions necessary to provide stable sensing under a wide variety of changing conditions. Only a few external parts are required for operation. The entire circuit can be built within a few square centimeters of single-sided PCB area. CEM-1 and FR1 punched, single-sided materials can be used for the lowest possible cost. The rear of the PCB can be mounted flush on the back of a glass or plastic panel using a conventional adhesive, such as 3M VHB two-sided adhesive acrylic film.

The QT1245 employs transverse charge-transfer (QT) sensing, a technology that senses changes in electrical charge forced across two electrode elements by a pulse edge (see Figure 3.).

Figure 2-1. Field Flow Between X and Y Elements

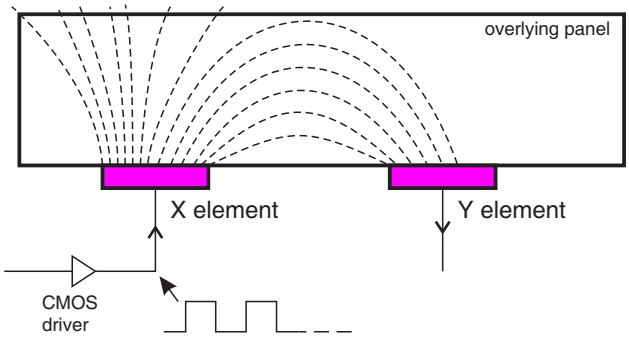

The QT1245 allows a wide range of key sizes and shapes to be mixed together in a single touch panel (see Section 3.8 on page 10).

The device uses an SPI interface to allow key data to be extracted and to permit individual key parameter setup. This interface uses a memory mapped structure, designed to minimize the amount of data traffic while maximizing the amount of information conveyed.

In addition to normal operating and setup functions the device can also report back actual signal strengths.

QmBtn software for the PC can be used to program the operation of the device as well as read back key status and signal levels in real time.

3. Hardware and Functional

3.1 Matrix Scan Sequence

The circuit operates by scanning each key sequentially. The keys are numbered from 0 – 23. Key scanning begins with location X = 0, Y = 0 (key 0). All keys on Y0 are scanned first, then Y1 and finishing with all keys on Y2.

For example, the sequence is:

X0Y0, X1Y0 to X7Y0

X0Y1, X1Y1 to X7Y1

X0Y2, X1Y2 to X7Y2

Table 3-1 shows the key numbering.

Table 3-1. Key Numbers

	X7	X6	X5	X4	X3	X2	X1	X0	
Y0	7	6	5	4	3	2	1	0	Key numbers
Y1	15	14	13	12	11	10	9	8	
Y2	23	22	21	20	19	18	17	16	

Each key is sampled in a burst of acquisition pulses whose length is determined by the setups parameter BL (Section 7. on page 46). This can be set on a per-key basis. A burst is completed entirely before the next key is sampled. At the end of each burst the resulting signal is converted to digital form and processed. The burst length directly impacts key gain. Each key can have a unique burst length in order to allow tailoring of key sensitivity on a key-by-key basis.

3.2 Burst Paring

Keys that are disabled by setting NDIL to zero (Section 6.2.1 on page 31) are eliminated from the scan sequence to save scan time and thus power. As a consequence, the fewer keys that are used the faster the device can respond. All calibration times are reduced when keys are disabled.

3.3 Cs Sample Capacitor Operation

Cs capacitors absorb charge from the key electrodes on the rising edge of each X pulse. On each falling edge of X, the Y matrix line is clamped to ground to allow the electrode and wiring charges to neutralize in preparation for the next pulse. With each X pulse charge accumulates on Cs causing a staircase increase in its differential voltage.

After the burst completes, the device clamps the Y line to ground causing the opposite terminal to go negative. The charge on Cs is then measured using an external resistor to ramp the negative terminal upwards until a zero crossing is achieved. The time required to zero cross becomes the measurement result.

The Cs capacitors should be connected as shown in Figure 1-1 on page 4. They should be NP0 (preferred), X7R ceramics or PPS film. NPO offers the best stability. The value of these capacitors is not critical but 4.7 nF is recommended for most cases. If the transverse capacitive coupling from X to Y is large enough the voltage on a Cs capacitor can saturate, destroying gain. In such cases the burst length should be reduced and/or the Cs value increased. See Section 3.4.

If a Y line is not used its corresponding Cs capacitor may be omitted and the pins left floating.

3.4 Sample Capacitor; Saturation Effects

Cs voltage saturation at a pin YnB is shown in Figure 3-1. Saturation begins to occur when the voltage at a YnB pin becomes more negative than –0.25 V at the end of the burst. This nonlinearity is caused by excessive voltage accumulation on Cs inducing conduction in the pin protection diodes. This badly saturated signal destroys key gain and introduces a strong thermal coefficient which can cause phantom detection.

Figure 3-1. VCs – Nonlinear During Burst (Burst too long, or Cs too small, or X-Y transcapacitance too large)

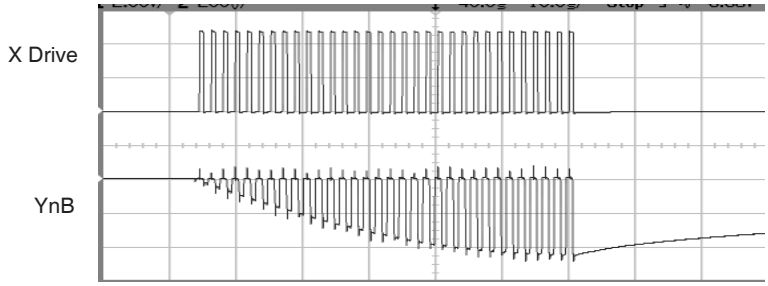

The cause of this is either from the burst length being too long, the Cs value being too small, or the X-Y transfer coupling being too large. Solutions include loosening up the key structure interleaving, greater separation of the X and Y lines on the PCB, increasing Cs, and decreasing the burst length.

Increasing Cs makes the part slower, decreasing burst length makes it less sensitive. A better PCB layout and a looser key structure (up to a point) have no negative effects.

Cs voltages should be observed on an oscilloscope with the matrix layer bonded to the panel material. If the Rs side of any Cs ramps is more negative than –0.25 V during any burst (not counting overshoot spikes which are probe artifacts), there is a potential saturation problem.

Figure 3-2 shows a defective waveform similar to that of Figure 3-1, but in this case the distortion is caused by excessive stray capacitance coupling from the Y line to AC ground (for example, from running too near and too far alongside a ground trace, ground plane, or other traces). The excess coupling causes the charge-transfer effect to dissipate a significant portion of the received charge from a key into the stray capacitance.

Figure 3-2. VCs – Poor Gain, Nonlinear During Burst (Excess capacitance from Y line to Gnd)

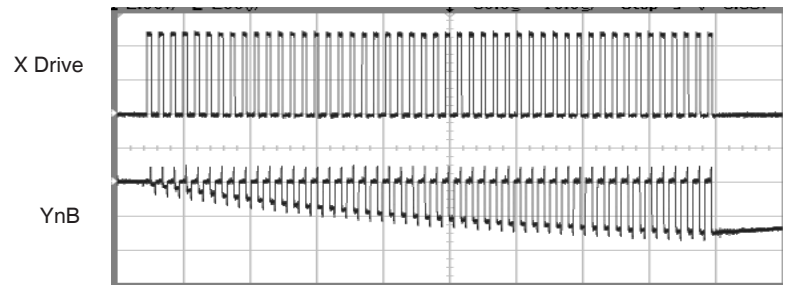

This phenomenon is more subtle. It can be best detected by increasing BL to a high count and watching what the waveform does as it descends towards and below –0.25 V. The waveform appears deceptively straight, but it slowly starts to flatten even before the –0.25 V level is reached.

A correct waveform is shown in Figure 3-3. Note that the bottom edge of the bottom trace is substantially straight (ignoring the downward spikes).

Figure 3-3. VCs – Correct

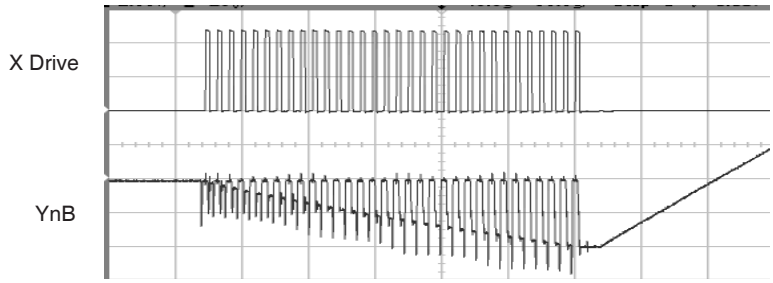

Unlike other QT circuits, the Cs capacitor values on QT1245 have no effect on conversion gain. However, they do affect conversion time.

Unused Y lines should be left open.

3.5 Sample Resistors

The sample resistors (Rs0 – Rs2) are used to perform single-slope ADC conversion of the acquired charge on each Cs capacitor. These resistors directly control acquisition gain. Larger values of Rs proportionately increase signal gain. For most applications Rs should be 1 MΩ. Unused Y lines do not require an Rs resistor.

3.6 Signal Levels

Using Atmel QmBtn software it is easy to observe the absolute level of signal received by the sensor on each key. The signal values should normally be in the range of 200 – 750 counts with properly designed key shapes (see the *Touch Sensors Design Guide*, available on the Atmel website) and values of Rs. However, long adjacent runs of X and Y lines can also artificially boost the signal values, and induce signal saturation: this is to be avoided. The X-to-Y coupling should come mostly from intra-key electrode coupling, not from stray X-to-Y trace coupling.

QmBtn software is available free of charge on the Atmel web site.

The signal swing from the smallest finger touch should preferably exceed 8 counts, with 12 being a reasonable target. The signal threshold setting (NTHR) should be set to a value guaranteed to be less than the signal swing caused by the smallest touch.

Increasing the burst length (BL) parameter increases the signal strengths as does increasing the sampling resistor (Rs) values.

3.7 Matrix Series Resistors

The X and Y matrix scan lines can use series resistors (Rx0 – Rx7 and Ry0 – Ry2 respectively) for improved EMC performance (Figure 1-1 on page 4).

X drive lines require Rx in most cases to reduce edge rates and thus reduce RF emissions. Values range from 1 kΩ – 100 kΩ, typically 1 kΩ.

Y lines need Ry to reduce EMC susceptibility problems and in some extreme cases, ESD. Values range from 1 kΩ – 100 kΩ, typically 1 kΩ.Y resistors act to reduce noise susceptibility problems by forming a natural low-pass filter with the Cs capacitors.

It is essential that the Rx and Ry resistors and Cs capacitors be placed very close to the chip. Placing these parts more than a few millimeters away opens the circuit up to high frequency interference problems (above 20 MHz) as the trace lengths between the components and the chip start to act as RF antennae.

The upper limits of Rx and Ry are reached when the signal level and hence key sensitivity are clearly reduced. The limits of Rx and Ry depend on key geometry and stray capacitance, and thus an oscilloscope is required to determine optimum values of both.

Dwell time is the duration in which charge coupled from X to Y is captured. Increasing the dwell time recovers some of the signal levels lost to higher values of Rx and Ry, as shown in Figure 3-4. Too short a dwell time causes charge to be lost if there is too much rising edge roll-off. Lengthening the dwell time causes this lost charge to be recaptured, thereby restoring key sensitivity. Dwell time is adjustable (see Section 6.10.1 on page 40) to one of 8 values.

Figure 3-4. Drive Pulse Roll-off and Dwell Time

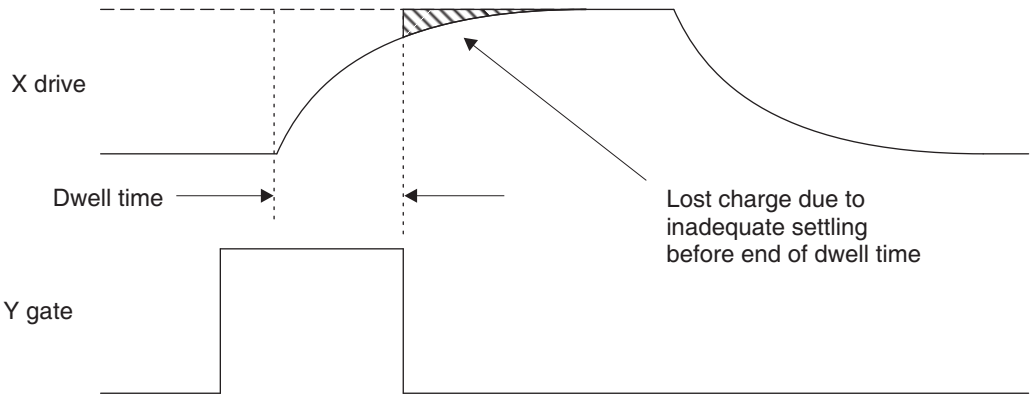

Dwell time problems can also be solved by either reducing the stray capacitance on the X line(s) (by a layout change, for example by reducing X line exposure to nearby ground planes or traces), or, the Rx resistor needs to be reduced in value (or a combination of both approaches).

One way to determine X settling time is to monitor the fields using a patch of metal foil or a small coin over the key (Figure 3-5). Only one key along a particular X line needs to be observed, as each of the keys along that X line will be identical. The chosen dwell time should exceed the observed 95% settling of the X-pulse by 25% or more.

Figure 3-5. Probing X-Drive Waveforms With a Coin

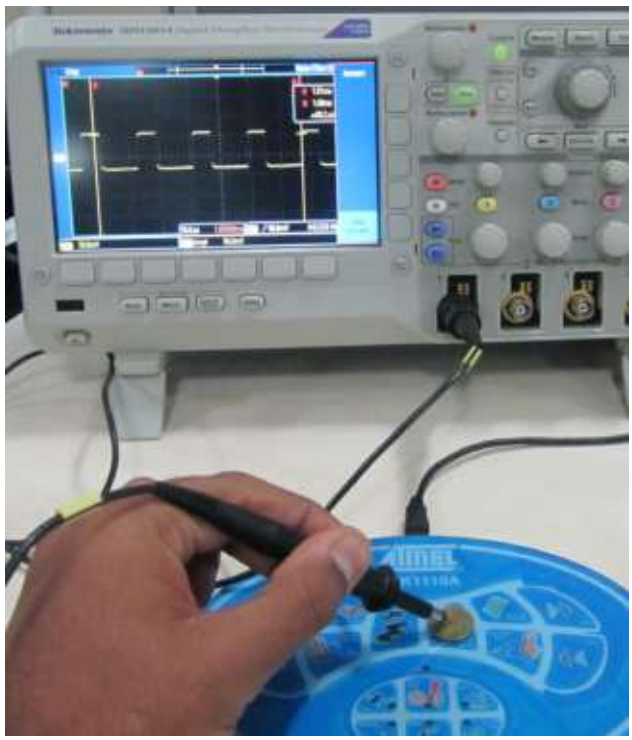

3.8 Key Design

For information about key design refer to the *Touch Sensors Design Guide* on the Atmel website.

3.9 PCB Layout, Construction

3.9.1 Overview

The chip should be placed near the touch keys on the same PCB so as to reduce X and Y trace lengths, thereby reducing the chances for EMC problems. Long connection traces act as RF antennae. The Y (receive) lines are much more susceptible to noise pickup than the X (drive) lines.

Even more importantly, all signal related discrete parts (resistors and capacitors) should be very close to the body of the chip. Wiring between the chip and the various resistors and capacitors should be as short and direct as possible to suppress noise pickup.

Note: Ground planes and traces should NOT be used around the keys and the Y lines from the keys. Ground areas, traces, and other adjacent signal conductors that act as AC ground (such as Vdd and LED drive lines) absorb the received key signals and reduce signal-to-noise ratio (SNR) and thus are counterproductive. Ground planes around keys also make water film effects worse.

Ground planes, if used, should be placed under or around the chip itself and the associated resistors and capacitors in the circuit, under or around the power supply, and back to a connector, but nowhere else.

3.9.2 LED Traces and Other Switching Signals

Digital switching signals near the Y lines induces transients into the acquired signals, deteriorating the SNR performance of the device. Such signals should be routed away from the Y lines, or the design should be such that these lines are not switched during the course of signal acquisition (bursts).

LED terminals which are multiplexed or switched into a floating state and which are within or physically very near a key structure (even if on another nearby PCB) should be bypassed to either Vss or Vdd with at least a 10 nF capacitor to suppress capacitive coupling effects which can induce false signal shifts. The bypass capacitor does not need to be next to the LED, in fact it can be quite distant. The bypass capacitor is noncritical and can be of any type.

LED terminals which are constantly connected to Vss or Vdd do not need further bypassing.

3.9.3 PCB Cleanliness

Modern no-clean flux is generally compatible with capacitive sensing circuits.



CAUTION: If a PCB is reworked in any way, it is highly likely that the behavior of the no-clean flux changes. This can mean that the flux changes from an inert material to one that can absorb moisture and dramatically affect capacitive measurements due to additional leakage currents. If so, the circuit can become erratic and exhibit poor environmental stability.

If a PCB is reworked in any way, clean it thoroughly to remove all traces of the flux residue around the capacitive sensor components. Dry it thoroughly before any further testing is conducted.

3.10 Power Supply Considerations

For the power supply range see Section 8.2 on page 48. If the power supply fluctuates slowly with temperature, the device tracks and compensates for these changes automatically with only minor changes in sensitivity. If the supply voltage drifts or shifts quickly, the drift compensation mechanism is not able to keep up, causing sensitivity anomalies or false detections.

As this device uses the power supply itself as an analog reference, the power should be very clean and come from a separate regulator. A standard inexpensive Low Dropout (LDO) type regulator should be used that is not also used to power other loads such as relays or other high current devices. Load shifts on the output of the LDO can cause Vdd to fluctuate enough to cause false detection or sensitivity shifts.

Caution: A regulator IC shared with other logic can result in erratic operation and is not advised.

A regulator can be shared among two or more devices on one board.

A single ceramic 0.1 µF bypass capacitor, with short traces, should be placed very close to each supply pin of the IC. Failure to do so can result in device oscillation, high current consumption and erratic operation.

3.11 Startup/Calibration Times

The device employs a rigorous initialization and self-check sequence for EN 60730 compliance. The last step in this sequence enables the serial communication interface, but only if the self-checks pass. The communication interface is not enabled if a safety critical fault is detected during the startup sequence. A maximum of 95 ms is required from reset before the device is ready to communicate.

The device determines a reference level for each key by calibrating all the keys immediately after initialization. Each key is calibrated independently and in parallel with all other enabled keys. Calibration takes between 11 and 62 keyscan cycles, each cycle being made up of one sample from each enabled key. The device ends calibration for a key if its reference has converged with the signal DC level. The calibration time is shortest when the keys signals are stable, typically increasing with increasing noise levels to the maximum of 62 keyscan cycles.

An error is reported for each key where calibration continues for the maximum number of keyscan cycles and the key reference does not appear to have converged with the signals DC level. Noise levels can vary from key to key such that some keys may take longer to calibrate than others. However, the device can report during this interval that the key(s) affected are still in calibration via status function bits. Table 3-2 shows keyscan cycles times and calibration times per key versus dwell time and burst length for all 24 keys enabled. The values given assume that MSYNC = off, SLEEP = off, FHM = off .

Table 3-2. Keyscan Cycle and Calibration Times

Setups	Keyscan Cycle Time	Calibration Time (min)	Calibration Time (max)
BL = 0 (16 pulses), DWELL = 0 (125 ns) FREQ0 = 0 Signal level = 100 counts	7 ms	77 ms (11 × 7)	434 ms (62 × 7)
BL = 3 (64 pulses), DWELL = 7 (4.5 µs) FREQ0 = 63 Signal level = 4000 counts	105 ms	1155 ms (11 × 105)	6510 ms (62 × 105)

Keyscan cycle and thus calibration time varies with different setups as well as keypad design. Increasing capacitive loading at each key increases the signal levels and hence increases the keyscan cycle time. Conversely, disabled keys are subtracted from the burst sequence and thus the keyscan cycle time is shortened. The keyscan cycle time should be measured on an oscilloscope for the specific setups in use.

The initialization time and calibration time must be added together to determine the total time from reset to a keys ability to report detection.

3.12 Reset Input

The $\overline{\text{RST}}$ pin can be used to reset the device to simulate a power-down cycle, in order to then bring the device up into a known state should communications with the device be lost. The pin is active low, and a low pulse lasting at least 10 µs must be applied to this pin to cause a reset.

The reset pin has an internal 30 kΩ – 60 kΩ resistor. A 2.2 µF capacitor plus a diode to Vdd can be connected to this pin as a traditional reset circuit, but this is not essential. Where the QT1245 has detected a failure of one of the internal EN60730 checks and has subsequently locked up in an infinite loop, only a power cycle or an external hardware reset can restore normal operation. It is strongly recommended that the host has control over the $\overline{\text{RST}}$ pin.

If an external hardware reset is not used, this pin may be connected to Vdd or left floating.

3.13 Frequency Hopping

The QT1245 supports frequency hopping to avoid a clash between the sampling frequency and noise at specific frequencies elsewhere in products or product-operating environments. It tries to hop away from the noise.

During the acquisition bursts, a sequence of pulses are emitted with a particular spacing, which equates to a particular sampling frequency. If the latter should coincide with significant noise generated elsewhere, touch sensing may be seriously impaired or false detections may occur.

To help combat such noise, the burst frequency can either be preset to one specific frequency (frequency hopping disabled) away from the noisy frequency, or frequency hopping can be enabled and set to switch dynamically between three specific configured frequencies or even set to sweep a configured range of frequencies.

3.14 Detection Integrators

See also Section 6.2.1 on page 31.

The device features a detection integration mechanism, which acts to confirm a detection in a robust fashion. A per-key counter is incremented each time the key has exceeded its threshold and is decremented each time the key does not exceed its threshold. When this counter reaches a preset limit the key is finally declared to be touched.

For example, if the limit value is 10, then the device has to exceed its threshold and stay there for a minimum of 10 acquisitions before the key is declared to be touched.

The QT1245 uses a two-tier confirmation mechanism having two such counters for each key. These can be thought of as inner loop and outer loop confirmation counters.

The inner counter is referred to as the fast DI. This acts to attempt to confirm a detection via rapid successive acquisition bursts, at the expense of delaying the sampling of the next key. Each key has its own fast DI counter and limit value. These limits can be changed via the setups block on a per-key basis.

The outer counter is referred to as the normal DI. This DI counter increments whenever the fast DI counter has reached its limit value. The normal DI counter also has a limit value which is settable on a per-key basis.

If a normal DI counter reaches its terminal count, the corresponding key is declared to be touched and becomes active. Note that the normal DI can only be incremented once per complete keyscan cycle (that is, more slowly, whereas the fast DI is incremented on the spot without interruption).

The net effect of this mechanism is a multiplication of the inner and outer counters and hence a highly noise-resistant sensing method. If the inner limit is set to 5, and the outer to 3, the net effect is a minimum of 5 × 3 = 15 threshold crossings to declare a key as active.

3.15 Sleep

If the sleep feature is enabled (see Section 7. on page 46), the device sleeps whenever possible to conserve power. Periodically, it wakes automatically, scans the matrix, and returns to sleep unless there is activity which demands further attention. The device returns to sleep automatically once all activity has ceased. The time for which it sleeps before automatically awakening can be configured.

A new communication with the device while it is asleep causes it to wake up, service the communication and scan the matrix. At least one full matrix scan is always performed after waking up and before returning to sleep.

At the end of each matrix scan, the part returns to sleep unless recent activity demands further attention. If there has been recent activity, the part performs another complete matrix scan and then attempts to sleep once again. This process is repeated indefinitely until the activity stops and the part returns to sleep.

Key touch activity prevents the part from sleeping. The part will not sleep while any key is calibrating or if any touch events were detected at any key in the most recent scan of the key matrix, or while a serial communication is in progress.

If the sleep feature is disabled in the setups, the device never sleeps. Sleep should be disabled if the device is being used in an FMEA or EN 60730 compliant design because all operations are stopped within the device while the part is asleep and the host is not able to distinguish between faulty operation and EN 60730 counters appearing to run slow because the part is intermittently sleeping. It should also be noted that the drift compensation interval will effectively be stretched each time the device sleeps because the device is fully halted during sleep and cannot perform drift compensation. If sleep is enabled, a shorter drift compensation interval may be required.

3.16 FMEA Tests

Failure Modes and Effects Analysis (FMEA) is a tool used to determine critical failure problems in control systems. FMEA analysis is being applied increasingly to a wide variety of applications including domestic appliances. To survive FMEA testing the control board must survive any single problem in a way that the overall product can either continue to operate in a safe way, or shut down.

The most common FMEA requirements regard opens and shorts analysis of adjacent pins on components and connectors. However, other criteria must usually be taken into account, for example complete device failure.

The device incorporates special self-test features which allow products to pass such FMEA tests easily, and enable key failure to be detected. These tests are performed in an extra burst slot after the last enabled key.

The FMEA testing is done on all enabled keys in the matrix, and results are reported via the serial interface. Disabled keys are not tested.

All FMEA tests are repeated every few seconds or faster during normal run operation, if the sleep feature is disabled. Sometimes FMEA errors can occur intermittently (for example, due to momentary power fluctuations). It is advisable to confirm a true FMEA fault condition by making sure the error flags persist for several seconds.

Also, since the device only communicates in slave mode, the host can determine immediately if the device has suffered a catastrophic failure.

The FMEA tests performed allow detection of fault conditions including the following:

- X drive line shorts to Vdd and Vss
- X drive line shorts to other pins
- X drive signal deviation
- Y line shorts to Vdd and Vss
- Y line shorts to other pins
- X to Y line shorts
- Cs capacitor shorts and open circuits
- Vref
- Key gain (see Section 6.9.2 on page 39 (Key Gain Test Threshold, KGTT))

Other tests incorporated into the device include:

- A test for signal levels against a preset minimum value (LSL setup, see Section 7. on page 46). If any signal level falls below this level, an error flag is generated.
- CRC communications checks on all data read from the device.

Some very small key designs have very low X-Y coupling. In these cases, the amount of signal is very small, and the key gain is low. As a result, small keys can fail the LSL test see (Section 6.9.1 on page 39) or the FMEA key gain test. In such cases, the burst length of the key should be increased so that the key gain increases. Failing that, a small ceramic capacitor, for example 3 pF, can be added between the X and Y lines serving the key to artificially boost signal strength. This capacitor must be located at the key's site to ensure the FMEA tests are not compromised.

3.17 IEC/EN 60730 Compliance

The device also incorporates special test features which, together with the FMEA tests, allow products to achieve IEC/EN60730 compliance with ease.

IEC/EN60730 compliance demands dynamic verification of all safety related components and sub-components within a product. The QT1245 is able to verify some sub-components internally, but others require verification by a separate, independent processing unit with another timing source. To this end the QT1245 exposes a number of internal operating parameters through its serial communications interface and requires the cooperation of a host to check and verify these parameters regularly. It is also necessary for the host to verify the communications themselves by checking and validating the communications CRC, which the QT1245 computes during each read transfer sequence (see Section 5.5 on page 25).

If a CRC check should fail, the host should not rely on the data but retry the transmission. Occasional CRC failures might be anticipated as a result of noise spikes. Repeated CRC failures might indicate a safety-critical failure. Where the QT1245 is able to verify sub-components internally, but any such verification fails, the device disables serial communication and locks up in an infinite loop. The host can detect this condition as repeated serial communication CRC failures.

During normal operation the host must perform regular reads of the IEC/EN60730 counters (see Section 5.4 on page 24) to verify correct operation of the QT1245. The host must also perform regular reads of the device status (see Section 5.5 on page 25) and verify there are no errors reported. The FMEA error flag, LSL error flag and setups CRC error flag must all be considered as part of an IEC/EN60730 compliant design.

The host can try to recover from any safety critical failure by resetting the QT1245 using its $\overline{\text{RST}}$ pin. The host should allow a grace period in consideration of the startup and initialization time the QT1245 requires after reset to communicate (see Section 3.11 on page 11).

The sub-components that the QT1245 is able to verify internally are tested repeatedly during the normal running of the device, with the various tests run in parallel. As each test ends the result is recorded and the test is restarted. The real time that elapses from the start of each test to the start of the next iteration of the same test is called the failure detect time, or hazard time, the maximum time for which an error could be undetected.

Each test is broken down into a number of smaller parts, each of which is processed in turn during each matrix scan. Each test is therefore completed either after a number of matrix scans, as shown in Table 3-3.

Table 3-3. Test run times (expressed in matrix scans)

Test	Required Matrix Scans to complete test
FMEA	24
Other	18
Variable Memory	768
Firmware CRC	342
Setups CRC	5

Table 3-4 shows matrix scan times for Setups that yield the shortest matrix scan time and a much longer scan time resulting from the use of long dwell and low frequency settings.

Table 3-4. Matrix Scan Times

Setups Conditions	Matrix Scan Time (ms)
BL = 0 (16 pulses), DWELL = 0 (0.13 µs), FREQ0 = 1, All keys enabled, FHM = 0, MSYNC = 0 (off), SLEEP = 0 (sleep disabled).	7.5
BL = 3 (64 pulses), DWELL = 7 (4.5 µs), FREQ0 = 25, All keys enabled, FHM = 0, MSYNC = 0 (off), SLEEP = 0 (sleep disabled).	38

Longer matrix scan times are possible than those shown in Table 3-4 by using even higher values for FREQ0 (lower burst frequencies), but these are considered extreme settings.

Table 3-5 shows the failure detect times for the internal tests assuming a matrix scan time of 9 ms, which is valid for typical Setups.

Table 3-5. Failure Detect Time

Test	Failure Detect Time (ms)
FMEA	216
Other	162
Variable Memory	6912
Firmware CRC	3078
Setups CRC	45
Conditions: Matrix scan time = 9 ms. QT1245 does not sleep for duration of tests.	

Longer failure detect times are possible than those shown in Table 3-5 where the matrix scan time is longer. The failure detect times are proportional to the matrix scan time. The failure detect time for other setups can therefore be determined by observing the matrix scan time using an oscilloscope and scaling the times given in Table 3-5 accordingly. Alternatively, the failure detect times can be calculated by taking the numbers from Table 3-5 and multiplying them by the matrix scan time.

Unnecessarily long settings of dwell and low burst frequencies should be avoided because these will also result in undesirably long failure detect times.

3.17.1 UL approval / VDE compliance

The QT1245 has been given a compliance test report by VDE and is approved by UL as a component suitable for use in both class B and class C safety critical products. By using this device and following the safety critical information throughout this datasheet, manufacturers can easily add a touch sense interface to their product, and be confident it can also readily pass UL or VDE testing.

4. Serial Communications

4.1 Introduction

The device uses an SPI interface for communications with a host.

4.2 SPI Interface

The SPI host device always initiates communications sequences. This is intentional for FMEA and IEC/EN60730 purposes so that the host always has total control over the communications with the QT1245. Even return data is controlled by the host. The QT1245 employs a CRC on return data to provide for robust communications.

There is an essential $\overline{\text{DRDY}}$ line that handshakes transmissions. This is needed by the host from the QT1245 to ensure that transmissions are not sent when the QT1245 is busy or has not yet processed a prior transfer. If the host does not observe the correct $\overline{\text{DRDY}}$ timing, random communication errors may result.

Initiating or Resetting Communications: After a reset, or should communications be lost due to noise or out-of-sequence reception, the host should repeatedly wait for a period not less than the QT1245 communications time-out (30 ms ±5 ms). The host should then read location 0, followed by the CRC bytes, until the correct response is received back from location 0 and validated by the CRC. Location 0 should read as 19 hex (25 decimal). The host can then resume normal run mode communications from a clean start.

Poll Rate: The typical poll rate in normal run operation should be no faster than once per 10 ms (25 ms is more than fast enough to extract status data).

SPI communications operate only in slave mode, and obey $\overline{\text{DRDY}}$ control signaling. The clocking is as follows:

Clock idle:	High
Clock shift out edge:	Falling
Clock data in edge:	Rising
Max clock rate:	1.5 MHz

SPI requires five signals to operate:

MOSI: Master-out / Slave-in data pin, used as an input for data from the host (master). This pin should be connected to the MOSI (DO) pin of the host device.

MISO: Master-in / Slave-out data pin, used as an output for data to the host. This pin should be connected to the MISO (DI) pin of the host. MISO floats in three-state mode between bytes when $\overline{\text{SS}}$ is high, to facilitate multiple devices on one SPI bus.

SCK: SPI clock, input only clock from host. The host must shift out data on the falling SCK edge and the QT1245 clocks data in on the rising edge. The QT1245 likewise shifts data out on the falling edge of SCK back to the host so that the host can shift the data in on the rising edge.

Note: Important – SCK must idle high, it should never float.

$\overline{\text{SS}}$: Slave select, input only. Acts as a framing signal to the sensor from the host. $\overline{\text{SS}}$ must be low before and during a data transfer with the host. It must not go high again until the SCK line has returned high. $\overline{\text{SS}}$ must idle high. This pin includes an internal pull-up resistor of 20 kΩ – 50 kΩ. When $\overline{\text{SS}}$ is high, MISO floats.

$\overline{\text{DRDY}}$: Data Ready, active-high, indicates to the host that the QT1245 is ready to send or receive data. This pin idles high and is an open-drain output with an internal 20 kΩ – 50 kΩ pull-up resistor. Most communications failures are the result of failure to properly observe the $\overline{\text{DRDY}}$ timing.

Serial communications pacing is controlled by $\overline{\text{DRDY}}$. Use of $\overline{\text{DRDY}}$ is critical to successful communications with the QT1245. The host is permitted to perform an SPI transfer only when $\overline{\text{DRDY}}$ has returned high. After each SPI byte transfer $\overline{\text{DRDY}}$ goes low after a short delay and remains low until the QT1245 is ready for another transfer. A short delay occurs before $\overline{\text{DRDY}}$ is driven low because the QT1245 may be otherwise busy and requires a finite time to respond. $\overline{\text{DRDY}}$ may go low only for a few microseconds. During the period from the end of one transfer until $\overline{\text{DRDY}}$ goes low and back high again, the host should not perform another transfer. Therefore, before each byte transmission the host should first check that $\overline{\text{DRDY}}$ is high again.

Figure 4-1. SPI Slave-only Mode Timing

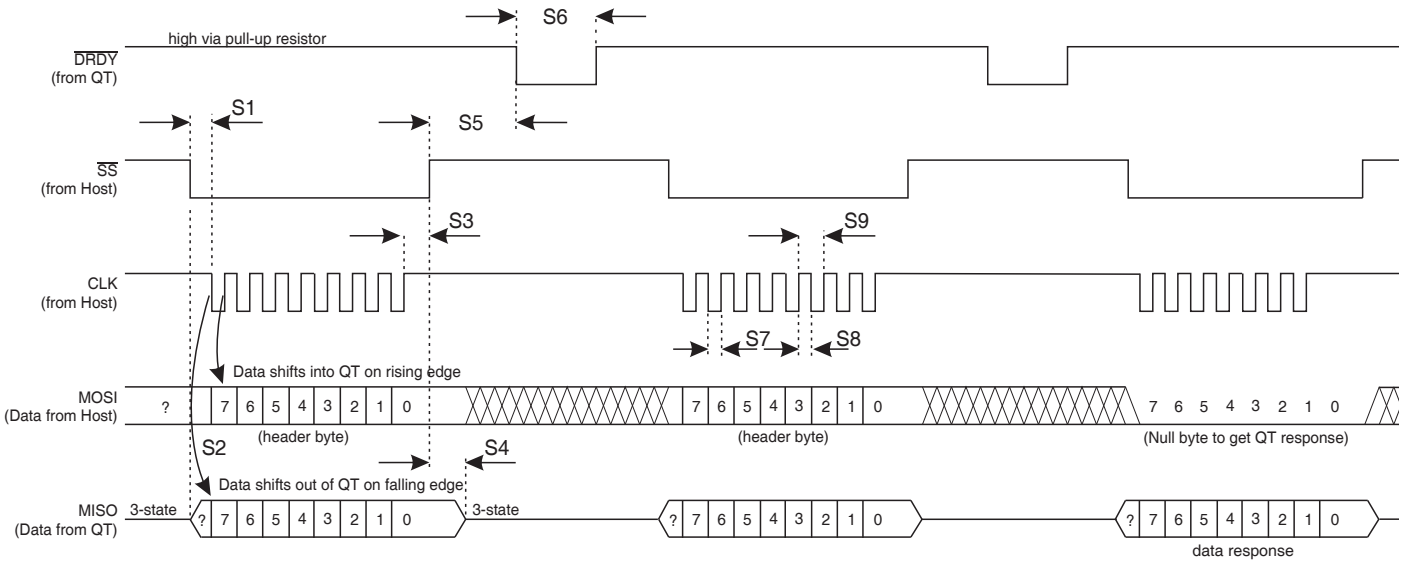

S1: > 333 ns [1]	S2: ≤ 20 ns	S3: ≥ 25 ns	S4: ≤ 20 ns	
S5: ≤ 40 µs	S6: ≤ 1 µs	S7: ≥ 333 ns	S8: ≥ 333 ns	S9: ≥ 667 ns

1. Or > 3 µs if sleep is enabled

If the host wants to perform a byte transfer with the QT1245 it should behave as follows:

1. Wait at least 40 µs after the previous SPI transfer (time S5 in Figure 4-1: $\overline{\text{DRDY}}$ is guaranteed to go low before this 40 µs expires).
2. Wait until $\overline{\text{DRDY}}$ is high (it may already be high again).
3. Perform the next SPI transfer with the QT1245.

The time it takes for $\overline{\text{DRDY}}$ to go high again after each transfer depends if the host is performing a setups write, or is performing a read, as follows:

Setups write: ≤4.5 ms

Read: ≤1 ms

The $\overline{\text{DRDY}}$ times above are valid when the maximum operating frequency (FREQ0 = 1) is used. These times increase as the operating frequency is reduced. With very low operating frequency add 5 ms to the above times.

Other $\overline{\text{DRDY}}$ specifications:

Min time $\overline{\text{DRDY}}$ is low: 1 µs

Min time $\overline{\text{DRDY}}$ is low after reset: 80 ms

Null Bytes: When the QT1245 responds with data requested in a read operation, the host should issue null bytes (0x00) in order to recover the response bytes back. The host should not start a new communications sequence until all the response and CRC bytes are accepted back from the QT1245.

Timeout: A successful communications sequence consists of a number of byte transfers. The QT1245 expects each byte transfer within a sequence to occur within 30 ms (± 5 ms) of the previous transfer. If more than 30 ms elapses between any two bytes, the QT1245 abandons the current sequence and starts a new sequence at the next byte transfer.

Wakeup: If a communication starts when the device is sleeping (see Section 6.5.1 on page 36), the device will be woken, triggered by the falling edge at $\overline{\text{SS}}$, but will not be fully awake and ready to receive the communication for up to 3 µs. If sleep is enabled, allow 3 µs from the $\overline{\text{SS}}$ falling edge to the first clock (S1 in Figure 4-1 on page 18).

SPI Line Noise: In some designs it is necessary to run SPI lines over ribbon cable across a lengthy distance on a PCB. This can introduce ringing, ground bounce, and other noise problems which can introduce false SPI clocking or false data. Simple RC networks and slower data rates are helpful to resolve these issues.

A CRC check appends all data responses in order to detect transmission errors to a high level of certainty.

4.3 $\overline{\text{CHANGE}}$ Pin

The $\overline{\text{CHANGE}}$ pin can be used to alert the host to key touches or key releases, thus reducing the need for unnecessary communications. Normally, the host can simply not bother to communicate with the device, except when the $\overline{\text{CHANGE}}$ pin becomes active.

$\overline{\text{CHANGE}}$ becomes active after reset and when there is a change in key state (either touch or touch release) and becomes inactive again only when the host performs a read from address 6, the detect status register for all keys on Y0. $\overline{\text{CHANGE}}$ does not self-clear. Only an SPI read from location 6, or a device reset, clears it.

It is important to read all three key state addresses to ensure the host has a complete picture of which keys have changed.

After the device is reset it performs internal initialisation and then sets $\overline{\text{CHANGE}}$ active (low) to signal the host that it is ready to communicate.

$\overline{\text{CHANGE}}$ is an open-drain output with an internal 20 kΩ – 50 kΩ pull-up resistor. This allows multiple devices to be connected together in a single wire-OR logic connection with the host. When the $\overline{\text{CHANGE}}$ pin goes active, the host can poll all devices to identify which one is reporting a touch change.

Every key can be individually configured to wake a host microcontroller upon a touch change. Therefore, a product can wake from sleep when any key state changes, or only when certain desired keys change state. The configuration is set in the setups block (see Appendix 6.2.3 on page 33) on a key-by-key basis.

IEC/EN60730 compliant products cannot rely on the $\overline{\text{CHANGE}}$ pin because its operation cannot be verified. The $\overline{\text{CHANGE}}$ pin can still be utilized but only to optimize the key response time. The host must also poll the QT1245 Detect Status bytes (Addresses 6, 7, 8), but at a rate suitable to guarantee IEC/EN60730 compliance. A poll rate of once every 100 ms would impose very little extra load on the QT1245.

The oscilloscope sync and the $\overline{\text{CHANGE}}$ output share an I/O pin, and can interfere with each other. SSYNC is intended as an aid only during development, and should be disabled for production.

5. Memory Map

5.1 Introduction

The device features a set of commands which are used for control and status reporting.

As well as Table 5-1 refer to Table 7-1 on page 46 for further details.

Table 5-1. Memory Map

Address	Use	Access
0	Reserved	Read
1	Reserved	Read
2	100 ms counter (IEC/EN60730)	Read
3	Signal fail counter (IEC/EN60730)	Read
4	Matrix Scan counter (IEC/EN60730)	Read
5	Device Status. Collection of bit flags	Read
6	Detect status for keys 0 to 7, one bit per key	Read
7	Detect status for keys 8 to 15, one bit per key	Read
8	Detect status for keys 16 to 23, one bit per key	Read
9	Reserved	Read
10	Current frequency	Read
11	Current pulse spacing	Read
12 – 15	Data for key 0. See Table 5-6 on page 27 for details.	Read
16 – 19	Data for key 1	Read
20 – 23	Data for key 2	Read
24 – 27	Data for key 3	Read
28 – 31	Data for key 4	Read
32 – 35	Data for key 5	Read
36 – 39	Data for key 6	Read
40 – 43	Data for key 7	Read
44 – 47	Data for key 8	Read
48 – 51	Data for key 9	Read
52 – 55	Data for key 10	Read
56 – 59	Data for key 11	Read
60 – 63	Data for key 12	Read
64 – 67	Data for key 13	Read
68 – 71	Data for key 14	Read
72 – 75	Data for key 15	Read

Table 5-1. Memory Map (Continued)

Address	Use	Access
76 – 79	Data for key 16	Read
80 – 83	Data for key 17	Read
84 – 87	Data for key 18	Read
88 – 91	Data for key 19	Read
92 – 95	Data for key 20	Read
96 – 99	Data for key 21	Read
100 – 103	Data for key 22	Read
104 – 107	Data for key 23	Read
108 – 139	Reserved	
140	Control command. Write `0xFF` to calibrate all keys. Write `0xFE` immediately before writing setups. Write 0xFD to perform low level calibration and offset for frequency hopping. Write k to calibrate key k. Write `0x18` to reset the device.	Write
141 – 250	Setups – see Section 6. on page 29 for details	Read/Write

Poll rate: The host can make use of the $\overline{\text{CHANGE}}$ pin output to initiate a communication. This guarantees the optimal polling rate.

If the host cannot make use of the $\overline{\text{CHANGE}}$ pin the poll rate in normal *run* operation should be no faster than once per matrix scan (see Section 8.4 on page 49). Typically 10 to 20 ms is more than fast enough to extract the key status. Anything faster will not provide new information and slows down the chip operation.

Run Poll Sequence: In normal run mode the host should limit traffic with a minimalist control structure. The host should just read the IEC/EN60730 counters, the Device Status and the three detect status registers (see Figure 5-1 on page 22).

Figure 5-1. Power-on or Hardware Reset Flow Chart

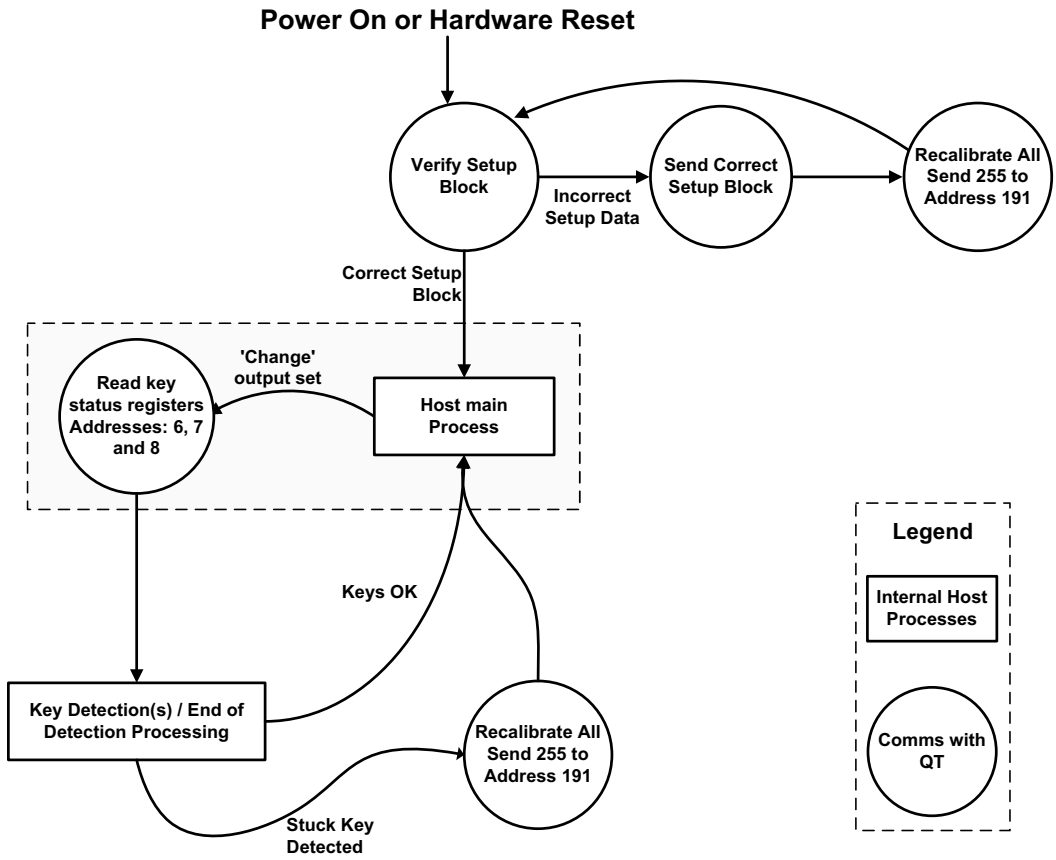

5.2 Writing Data to the Device

The sequence of events required to write data to the device is shown below:

Byte #	1		2		3	
MOSI	MemAddress	D	n	D	Data	D
MISO	U		U		U	

Table 5-2. Key to Write Sequence

Byte #	Name	Description
1	MemAddress	Target memory address within QT1245
	U	Undefined data byte, should be ignored
	D	40 µs delay then wait until $\overline{\text{DRDY}}$ high
2	n	# bytes to write. MSB = 0 (write). Valid range is 1 – 111.
3+	Data	Data byte(s) written to QT1245

The host initiates a write sequence by sending the internal memory address it wishes to write followed by n, the number of QT1245 addresses it wishes to write to. The host then sends one or more data bytes. Between each byte transfer, the host must follow the DRDY handshake procedure (wait 40 µs and then wait until DRDY is high). If the host sends more than one data byte, they are written to consecutive memory addresses. The device automatically increments the target memory address after writing each data byte.

Byte 2 is split into two fields. The MSB indicates a read or write operation and should be set to 0 to perform a write. Bits 6 – 0 define the number of data bytes the host wishes to write to the device.

The host should not try to write beyond the last setups address.

The raw SPI protocol defines simultaneous bidirectional byte transfers. For each byte sent from the host, another byte is received back from the slave. During a write sequence, the bytes returned by the QT1245 are undefined and should be ignored.

5.3 Reading Data From the Device

The sequence of events required to read data from the device is shown below:

Byte #	1		2		3		4		..							
MOSI	MemAddress	D	128 + n	D	NULL	D	NULL	D	..	NULL	D	NULL	D	NULL	D	
MISO	U		U		Data 1		Data 2		..	Data n		CRC LSB		CRC MSB		

Table 5-3. Key to Read Sequence

Byte #	Name	Description
1	MemAddress	Target memory address within QT1245
	U	Undefined data byte, should be ignored
	D	40 µs delay then wait until DRDY high
2	n	Bit 7 = 1 (read). Bits 6 – 0 = # bytes to read, valid range is 1 – 127. CRC is available after reading n bytes.
	NULL	Placeholder, send from the host to recover data from the QT1245
3+	Data	Data returned from QT1245

The host initiates a read sequence by sending the internal memory address it wishes to read followed by 128+n, where n is the number of QT1245 addresses it wishes to read from. The host then sends NULL bytes to recover the n data bytes from the QT1245. If the host specifies n to be greater than 1, the data bytes are read from consecutive memory addresses. The device automatically increments the target memory address after reading each location. When all n data bytes have been returned, the device returns a 16-bit CRC, LSB first. Between each byte transfer, the host must follow the DRDY handshake procedure (wait 40 µs and then wait until DRDY is high).

Byte 2 is split into two fields. The MSB indicates a read or write operation and should be set to 1 to perform a read. Bits 6 – 0 define the number of data bytes the host wishes to read from the device.

The device calculates the double-word (16-bit) CRC using the internal memory start address, the number of bytes to be read (n), and the n data bytes themselves, all in the same sequence they occur during the transmission (see Appendix A. on page 54).

The raw SPI protocol defines simultaneous bidirectional byte transfers. For each byte sent from the host, another byte is received back from the slave. During a read sequence, the bytes transmitted by the QT1245 while the host is sending the address and n are undefined and should be ignored.

5.4 Report IEC/EN60730 Counters

These counters can be used by the host to check the correct speed and operation of the device. The host must check these values regularly to meet the requirements of IEC/EN60730. IEC/EN60730 requires that each component of a system be checked for correct operation. Where correct speed of operation must be confirmed and the device has no way to perform such a cross-check internally, counters are exposed through the communication interface to enable independent cross checking by the host.

Address 2: 100 ms counter (IEC/EN60730)

This is an 8-bit unsigned counter that is incremented once every 100 ms, counting 256 steps repeatedly from 0 to 255. When the counter has reached 255 it wraps back to 0 at the next 100 ms interval. The counter should take between 25 and 26 seconds (256 × 100 ms = 25.6s) to count up from zero through 255 and wrap back to zero again. The host must read this counter regularly and cross-check the counting rate against one of its own clock sources.

If the 100 ms counter is read once every second, for example, the host should find the counter has increased by 10 counts from the value returned at each previous read and should traverse one full count range (256 steps) when the host has read the counter 25 or 26 times. The host should verify the 100 ms counter is incrementing at the expected rate. If the counter advances faster or slower than expected, there could be a fault with the QT1245 or the host, and the host should adopt an appropriate strategy to meet the required safety standard.

Address 3: Signal fail counter (IEC/EN60730)

This is an 8-bit unsigned counter that is incremented each time a signal capture failure occurs. Signal capture failure can occur where keys are enabled but do not physically exist. Only keys that exist should be enabled. All other keys should be disabled.

Signal capture failure can also occur where heavy noise spikes corrupt the signal. Occasional capture failure is to be expected and does not unduly affect the device performance. Regular capture failure would extend the key response time. The host must check this counter regularly. Tests should be made with a heavy noise source during development to determine how the key response time is affected and determine a maximum acceptable count rate for this counter.

Address 4: Matrix scan counter (IEC/EN60730)

This is an 8-bit counter that is incremented before the start of each matrix scan, or keyscan cycle, counting 256 steps repeatedly from 0 to 255. When the counter has reached 255 it wraps back to 0 at the start of the next keyscan cycle. The keyscan cycle time should be measured with an oscilloscope during development. The Matrix Scan count rate can be calculated directly from this.

For example, if the keyscan cycle time is measured as 10 ms, the counter counts 256 steps in 2560 ms (256 × 10 ms). The host must read this counter regularly to check the matrix scan is operating at the expected rate. If the Matrix Scan counter is read once every 100 ms, for example, the host should find the counter has increased by 10 counts from the value returned at each previous read and should traverse one full count range (256 steps) when the host has read the counter 25 or 26 times. The host should verify the counter is incrementing at the expected rate. If the counter advances faster or slower than expected, there could be a fault with the QT1245 or the host, and the host should adopt an appropriate strategy to meet the required safety standard.

5.5 Report Device Status

Address 5: Device status

This byte contains the general status bits. The bits report as follows:

Bit	Description
7	Reserved
6	Reserved
5	Reserved
4	1 = FMEA failure detected
3	1 = LSL failure detected
2	1 = any key in calibration
1	1 = Mains sync. error
0	1 = Setups CRC does not match HCRC

Bit 4: Set if an FMEA error was detected during operation. See Section 3.16 on page 13.

Bit 3: Reports that an enabled key has a very low reference value, lower than the user-configurable LSL value (see Section 7. on page 46).

Bit 2: Set if any key is in the process of calibrating.

Bit 1: Set if there was a mains sync error, for example there was no Sync signal detected within the allotted 100 ms. See Section 7. on page 46. This condition is not necessarily fatal to operation, however the device operates very slowly and may suffer from noise problems if the sync feature was required for noise reasons. Reset the device to clear this bit after the MSYNC setup has been cleared (OFF).

Bit 0: Set if the setups CRC does not match the CRC uploaded by the host (HCRC). The CRC is computed repeatedly and checked against the value uploaded by the host. This bit is set if the two values do not match.

A host in an IEC/EN60730 compliant product must check bits 0, 2, 3, and 4 and handle persistent errors appropriately to maintain safety.

5.6 Report Detections for All Keys

Address 6: detect status for keys 0 – 7

Address 7: detect status for keys 8 – 15

Address 8: detect status for keys 16 – 23

Each location indicates all keys in detection, if any, as a bitfield. Touched keys report as 1, untouched or disabled keys report as 0.

Note: The $\overline{\text{CHANGE}}$ pin becomes inactive on reading address 6.

Table 5-4. Bits for Key Reporting and Numbering

Address	Bit Number							
	7	**6**	**5**	**4**	**3**	**2**	**1**	**0**
6	7	6	5	4	3	2	1	0
7	15	14	13	12	11	10	9	8
8	23	22	21	20	19	18	17	16

Note: The device should be reset after disabling keys because, if a key was in detect when it was disabled, it could incorrectly report detect.

5.7 Frequency Hopping

The following locations in the memory map report runtime variables used by the frequency hopping module.

Address 10: Current Frequency

When FHM = 1 or FHM = 2, the frequency hopping module switches between three configurable frequencies. This byte indicates which of the three frequency selections is currently in use.

Table 5-5. Frequency in Use

Value	Description
0	Configured frequency – 0 is in use
1	Configured frequency – 1 is in use
2	Configured frequency – 2 is in use

Address 11: Current Pulse-Spacing

The burst sampling frequency is changed by using different idle times, or pulse spacing, between pulses in the burst. This byte reflects that idle time, with each increment representing an increase of approximately 375 ns.

5.8 Data Set for Keys

Addresses 12 – 107 allow data to be read for each key. There are a total of 24 keys and 4 bytes of data per key, yielding a total of 96 addresses. These addresses are read-only.

The data for the keys is mapped in sequence, starting with key 0 at addresses 12 – 15. The data for key 15 is located at addresses 72 – 75, and that for key 23 is located at addresses 104 – 107. Table 5-6 summarizes this.

Table 5-6. Data Set for Keys

Address	Variable	Key #	# Bits	Bit-mask	Valid Range	Description
12 – 13	Signal DI count	0	12 4	0x0FFF 0xF000	0 – 4095 0 – 15	Signal Normal Detector Integrator
14 – 15	Reference LSL failure FMEA failure	0	12 1 1	0x0FFF 0x1000 0x2000	0 – 4095 0, 1 0, 1	Reference LSL 1 = Reference level < LSL (low signal level) FMEA 1 = FMEA failure
16 – 17	Signal DI count	1	…	…	…	…
18 – 19	Reference LSL failure FMEA failure	1	…	…	…	…
…	…	…	…	…	…	…
72 – 73	Signal DI count	15	…	…	…	…
74 – 75	Reference LSL failure FMEA failure	15	…	…	…	…
…	…	…	…	…	…	…
104 – 105	Signal DI count	23	12 4	0x0FFF 0xF000	0 – 4095 0 – 15	Signal Normal Detector Integrator
106 – 107	Reference LSL failure FMEA failure	23	12 1 1	0x0FFF 0x1000 0x2000	0 – 4095 0, 1 0, 1	Reference LSL 1 = Reference level < LSL (low signal level) FMEA 1 = FMEA failure

5.9 Command Address – 140

The Command Address (140) is a write-only location. Reading from this address will not cause any side-effects but returns undefined values. The value written defines the action taken.

(0xFF) Calibrate All:

Shortly after the QT1245 receives a value of 0xFF at the Command Address it recalibrates all keys and restarts operation.

The host can monitor the progress of the calibration by checking the device status byte, and the data set for each key.

(0xFE) Setups Write-enable:

Writing a value of 0xFE to the Command Address write-enables the setups block of the device. Normally the setups are write-protected. The write-protection is engaged as soon as a read operation is performed at any address. By writing a value of 0xFE to the Command Address, the write-protection is disengaged. The Command Address is located conveniently immediately before the setups so that the write protection may be disengaged and the setups written in a single SPI communication sequence.

(0xFD) Low Level Cal and Offset:

Shortly after receiving this command the QT1245 performs a calibration and offset procedure across all keys and restarts operation. If a previous command 0xFD is still being processed, the new request will be ignored.

This command takes up to 3 seconds to complete. The host can monitor the progress of the calibration by checking the QT1245 Device Status at address 5. The calibration bit will be set throughout the process.

The low level calibration and offset procedure involves the device calibrating each key in turn at each of the operating frequencies selected with FREQ0, FREQ1 and FREQ2, calculating the difference between the signals at those frequencies and storing the results as offsets into CFO_1 and CFO_2 for each key. When the procedure is complete, the host can read back the setups and record CFO_1 and CFO_2 into its own copy of the setups block. The QT1245 does not change the setups CRC, so there will be a mismatch in the setups CRC after this command completes. The onus is on the host to compute the CRC and upload a definitive setups block to the QT1245.

(0x18) Force Reset:

Shortly after the QT1245 receives a value of 0x18 at the Command Address it performs a reset. After any reset, the device automatically performs a full key calibration on all keys.

(*k*) Calibrate Key:

Writing a value *k* in the range 0 – 23 to the Command Address requests the QT1245 to recalibrate key *k*.

The operation is the same as if 0xFF were written except only one key *k* is affected where *k* is from 0 – 23.

The chosen key *k* is recalibrated in its native timeslot. Normal running of the part is not interrupted and all other keys operate correctly throughout. This command is for use only during normal operation to try to recover a single key that has failed calibration or is not calibrated correctly.

6. Setups

Addresses 141 – 250 provide read/write access to the setups. The host may write the entire setups block in one operation or may write to individual setups.

The setups must be write-enabled by writing `0xFE` to the Command Address immediately before writing the setups themselves. Normally the setups are write-protected and the write-protection is engaged as soon as a read operation is performed from any address.

When the host is writing new setups, the values are recorded into EEPROM as they arrive from the host. Setup changes become effective immediately. However, the device should be reset because if a key was in detect when it was disabled, it could incorrectly continue to report detect. Calibration is typically required after setups change.

Many setups employ lookup-table (LUT) value translation. The setups block summary (Table 7-1 on page 46) shows all translation values. Default values shown are factory defaults.

6.1 Address 141 – 164: NTHR, PTHR, NDRIFT, BL

6.1.1 Threshold – NTHR, PTHR

Table 6-1. NTHR

Address	Bit 7	Bit 6	Bit 5	Bit 4	Bit 3	Bit 2	Bit 1	Bit 0
141 – 164	BL		NDRIFT			NTHR, PTHR		

The negative threshold value is established relative to a key signal reference value. The threshold is used to determine key touch when crossed by a negative-going signal swing after having been filtered by the detection integrator. Larger absolute values of threshold desensitize keys since the signal must travel further in order to cross the threshold level. Conversely, lower thresholds make keys more sensitive.

As Cx and Cs drift, the reference point drift-compensates for these changes at a user-settable rate. The threshold level is recomputed whenever the reference point moves, and thus it also is drift compensated.

The amount of NTHR required depends on the amount of signal swing that occurs when a key is touched. Thicker panels or smaller key geometries reduce key gain (that is, signal swing from touch, thus requiring smaller NTHR values to detect touch).

The positive threshold is used to provide a mechanism for recalibration of the reference point when a key's signal moves abruptly to the positive. This condition is not normal, and usually occurs only after a recalibration when an object is touching the key and is subsequently removed.

Positive hysteresis: PHYST is fixed at 12.5% of the positive threshold value and cannot be altered.

NTHR and PTHR are programmed on a per-key basis (see Table 7-1 on page 46). They share the same space in the address map and hence share the same value for each key. See also Section 6.10.3 on page 41.

NTHR, PTHR Typical values: 2 – 4 (8 – 12 counts of threshold; translation via LUT).

NTHR, PTHR Default value: 3 (10 counts of threshold)

6.1.2 Drift Compensation – NDRIFT, PDRIFT

Table 6-2. NDRIFT

Address	Bit 7	Bit 6	Bit 5	Bit 4	Bit 3	Bit 2	Bit 1	Bit 0
141 – 164	BL		NDRIFT			NTHR		

Signals can drift because of changes in Cx and Cs over time and temperature. It is crucial that such drift be compensated, else false detections and sensitivity shifts can occur.

Drift compensation (Figure 6-1) is performed by making the reference level track the raw signal at a slow rate, but only while there is no detection in effect. The rate of adjustment must be performed slowly, otherwise legitimate detections could be ignored. The device drift compensates using a slew-rate limited change to the reference level. The threshold and hysteresis values are slaved to this reference.

Figure 6-1. Thresholds and Drift Compensation

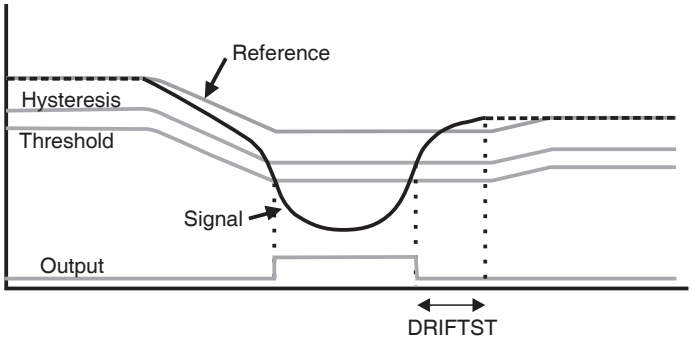

When a finger is sensed, the signal falls since the human body acts to absorb charge from the cross-coupling between X and Y lines. An isolated, untouched foreign object (a coin, or a water film) cause the signal to rise very slightly due to an enhancement of coupling. This is contrary to the way most capacitive sensors operate.

Once a finger is sensed, the drift compensation mechanism ceases since the signal is legitimately detecting an object. Drift compensation only works when the signal in question has not crossed the negative threshold level.

The drift compensation mechanism can be made asymmetric if desired. The drift-compensation can be made to occur in one direction faster than it does in the other simply by changing the NDRIFT and PDRIFT setups parameters. NDRIFT is set on a per-key basis, whereas PDRIFT is set using one global value which is applied across all keys.

Specifically, drift compensation should be set to compensate faster for increasing signals than for decreasing signals. Decreasing signals should not be compensated quickly, since an approaching finger could be compensated for partially or entirely before even touching the touch pad. However, an obstruction over the sense pad, for which the sensor has already made full allowance for, could suddenly be removed leaving the sensor with an artificially suppressed reference level and thus become insensitive to touch. In this latter case, the sensor should compensate for the object's removal by raising the reference level relatively quickly.

Drift compensation and the detection time-outs work together to provide for robust, adaptive sensing. The time-outs provide abrupt changes in reference calibration depending on the duration of the signal event.

This function is programmed on a per-key basis. See Table 7-1 on page 46.

NDRIFT Typical values: 4 – 5
(2 – 3.3 s / count of drift compensation)
translation via LUT, page 46)

NDRIFT Default value: 4
(2 s / count of drift compensation)

PDRIFT Typical values: 4 – 5
(2 – 3.3 s / count of drift compensation;
translation via LUT, page 46)

PDRIFT Default value: 4
(2 s / count of drift compensation)

6.1.3 Burst Length – BL

Table 6-3. BL

Address	Bit 7	Bit 6	Bit 5	Bit 4	Bit 3	Bit 2	Bit 1	Bit 0
141 – 164	BL		NDRIFT			NTHR		

The signal gain for each key is controlled by circuit parameters as well as the burst length.

The burst length is simply the number of times the charge-transfer (QT) process is performed on a given key. Each QT process is simply the pulsing of an X line once, with a corresponding Y line enabled to capture the resulting charge passed through the keys capacitance Cx.

QT1245 uses a fixed number of QT cycles which are executed in burst mode. There can be up to 64 QT cycles in a burst, in accordance with the list of permitted values shown in Table 7-1 on page 46.

Increasing burst length directly affects key sensitivity. This occurs because the accumulation of charge in the charge integrator is directly linked to the burst length. The burst length of each key can be set individually, allowing for direct digital control over the signal gains of each key individually.

Apparent touch sensitivity is also controlled by the Negative Threshold level (NTHR). Burst length and NTHR interact. Normally burst lengths should be kept as short as possible to limit RF emissions, but NTHR should be kept above 6 to reduce false detections due to external noise. The detection integrator mechanism also helps to prevent false detections.

This function is programmed on a per-key basis. See Table 7-1 on page 46.

BL Typical values: 1, 2 (32, 48 pulses / burst)

BL Default value: 2 (48 pulses / burst)

BL Possible values: 0, 1, 2, 3 (16, 32, 48, 64 pulses)

6.2 Address 165 – 188: NDIL, FDIL, AKS, WAKE

6.2.1 Detect Integrators – NDIL, FDIL

Table 6-4. NDIL, FDIL

Address	Bit 7	Bit 6	Bit 5	Bit 4	Bit 3	Bit 2	Bit 1	Bit 0
165 – 188	WAKE	AKS	FDIL			NDIL		

The NDIL parameter is used to enable and disable keys in the matrix and to provide signal filtering. To enable a key, its NDIL parameter should be nonzero (that is, NDIL = 0 disables a key).

To suppress false detections caused by spurious events like electrical noise, the device incorporates a *detection integrator* or DI counter mechanism. A per-key counter is incremented each time the key has exceeded its threshold and is decremented each time the key does not exceed its threshold. When this counter reaches a preset limit the key is finally declared to be touched.

The DI mechanism uses two counters. The first is the *fast DI* counter FDIL. When a key signal is first noted to be below the negative threshold, the key enters *fast burst* mode. In this mode the burst is rapidly repeated for up to the specified limit count of the fast DI counter. Each key has its own counter and its own specified fast-DI limit (FDIL), which can range from 1 – 15. When fast burst is entered the QT device locks onto the key and repeats the acquire burst until the fast-DI counter reaches FDIL or drops back to zero. After this the device resumes normal keyscanning and goes on to the next key.

The *Normal DI* counter counts the number of times the fast-DI counter reached its FDIL value. The Normal DI counter can only increment once per complete scan of all keys. Only when the Normal DI counter reaches NDIL does the key become formally *active*.

The net effect of this is that the sensor can rapidly lock onto and confirm a detection with many confirmations, while still scanning other keys. The ratio of *fast* to *normal* counts is completely user settable via the setups process. The total number of required confirmations is equal to FDIL times NDIL.

- If FDIL = 6 and NDIL = 2, the total detection confirmations required is 12, even though the device only scanned through all keys twice.

  The DI is extremely effective at reducing false detections at the expense of slower reaction times. In some applications a slow reaction time is desirable. The DI can be used to intentionally slow down touch response in order to require the user to touch longer to operate the key.
- If FDIL = 1, the device functions conventionally. Each channel acquires once in rotation, and the normal detect integrator counter (NDIL) operates to confirm a detection. Fast-DI is in essence not operational.
- If FDIL ≥ 2, then the fast-DI counter also operates in addition to the NDIL counter.
- If Signal ≤ NTHR: The fast-DI counter is incremented towards FDIL due to touch.
- If Signal > NTHR then the fast-DI counter is decremented due to lack of touch.

Disabling a key: If NDIL = 0, the key becomes disabled. Keys disabled in this way are pared from the burst sequence in order to improve sampling rates and thus response time. See Section 3. on page 6.

This function is programmed on a per-key basis. See Table 7-1 on page 46.

NDIL Typical values:	1, 2 (2 or 4 confirmations; translation via LUT)
NDIL Default value:	2 (4 confirmations)
FDIL Typical values:	2, 3 (4 or 6 confirmations; translation via LUT)
FDIL Default value:	3 (6 confirmations)

6.2.2 Adjacent Key Suppression Technology – AKS

Table 6-5. AKS

Address	Bit 7	Bit 6	Bit 5	Bit 4	Bit 3	Bit 2	Bit 1	Bit 0
165 – 188	WAKE	AKS	FDIL			NDIL		

This device incorporates adjacent key suppression (AKS) technology that can be selected on a per-key basis. AKS technology permits the suppression of multiple key presses based on relative signal strength. This feature assists in solving the problem of surface moisture which can bridge a key touch to an adjacent key, causing multiple key presses. This feature is also useful for panels with tightly spaced keys, where a fingertip might inadvertently activate an adjacent key.

AKS technology works for keys that are AKS-enabled anywhere in the matrix and is not restricted to physically adjacent keys. The device has no knowledge of which keys are actually physically adjacent. When enabled for a key, adjacent key suppression causes detections on that key to be suppressed if any other AKS-enabled key in the panel has a more negative signal deviation from its reference during the DI process. Once a key reaches detect it stays in detect as long as the touch remains, regardless of the signal strength on any other AKS enabled keys.

This feature does not account for varying key gains (burst length) but ignores the actual negative detection threshold setting for the key. If AKS-enabled keys have different sizes, it may be necessary to reduce the gains of larger keys, relative to smaller ones, to equalize the effects of AKS technology. The signal threshold of the larger keys can be altered to compensate for this without causing problems with key suppression.

Adjacent key suppression works to augment the natural moisture suppression of narrow gated transfer switches creating a more robust sensing method.

This function is programmed on a per-key basis. See Table 7-1 on page 46.

AKS Default value: 0 (Off)

6.2.3 Wake on Touch – WAKE

Table 6-6. WAKE

Address	Bit 7	Bit 6	Bit 5	Bit 4	Bit 3	Bit 2	Bit 1	Bit 0
165 – 188	WAKE	AKS	FDIL			NDIL		

The device can be configured for full time wake-up from Sleep mode when specific keys are touched or released using this feature, in order to improve response time after each key state change. This feature makes the $\overline{\text{CHANGE}}$ pin go active on a key touch or key release (see Section 4.3 on page 19) enabling a host to sleep until a suitable touch event occurs.

Each key has its own WAKE configuration bit so that any combination of keys can be configured for this function.

The time the part remains awake after the last key is released can also be configured in the setup block (see the AWAKE feature, Section 7. on page 46).

Any key, even one where the WAKE feature is not enabled, prolongs the time the part remains awake once the part is awake.

This function is programmed on a per-key basis. See Table 7-1 on page 46.

WAKE Default value: 1 (On)

WAKE Possible range: 0, 1 (Off, On)

6.3 Calibrated Frequency Offset – CFO_1 and CFO_2

Table 6-7. CFO_1 and CFO_2

Address	Bit 7	Bit 6	Bit 5	Bit 4	Bit 3	Bit 2	Bit 1	Bit 0
189 – 212	CFO_1							
213 – 236	CFO_2							

CFO_1 and CFO_2 are only used if FHM = 2.

If frequency hopping is enabled with FHM = 2, the QT1245 adjusts each key's reference at each frequency hop. The amount of the adjustment must first be configured using the setups CFO_1 and CFO_2. These values are the amounts by which reference levels need to be adjusted to track the signal changes when changing from the frequency set by FREQ0 to the frequency set by FREQ1 or FREQ2. Each key uses its individual settings of CFO_1 and CFO_2.

Assuming FREQ0 defines the highest of the three selected frequencies, CFO_1 indicates the offset to be applied when the frequency is changed between those defined by FREQ0 and FREQ1. CFO_2 indicates the offset to be applied when the frequency is changed between those defined by FREQ0 and FREQ2. The QT1245 automatically uses combinations of these offset values, as necessary, when switching between the three different frequencies.

The Calibrated Frequency Offset (CFO) values are used to adjust each key reference whenever a frequency hop occurs, taking into account any differences in calibrated signal at the different frequencies. The device uses the highest selected frequency as a point of reference and calculates offsets in calibrated signals at the other two frequencies relative to the highest one.

Note: Configure FREQ0, FREQ1 and FREQ2 before trying to configure CFO_1 and CFO_2.

Command `0xFD` (Low level calibration and offset) can be written to the Command Address (140) to automatically fill out the CFO_1 and CFO_2 values.

Alternatively, CFO_1 and CFO_2 can be manually configured.

Once FREQ0, FREQ1 and FREQ2 have been configured for the three chosen frequencies, CFO_1 and CFO_2 should be loaded with the signal offsets appropriate for the signal shifts observed when switching between the three different frequencies.

Follow these steps to determine the different signal levels for each key at each frequency and to determine appropriate values to load into CFO_1 and CFO_2:

1. Configure FHM = 0 to disable frequency hopping temporarily.
2. Configure FREQ0 to select the highest of the chosen frequencies (FREQ0 should be set to a lower value than FREQ1 and FREQ2).
3. Recalibrate all keys.
4. Make a note of each key reference level, Ref(*k*, f0).
5. Configure FREQ0 to select the second of the chosen frequencies.
6. Recalibrate all keys.
7. Make a note of each key reference level, Ref(*k*, f1).
8. Configure FREQ0 to select the last of the chosen frequencies.
9. Recalibrate all keys.
10. Make a note of each key reference level, Ref(*k*, f2).
11. Determine the difference in signal for each key in turn when the frequency changes from FREQ0 to FREQ1, using the following equation:

$$Diff(k, f0, f1) = Ref(k, f0) – Ref(k, f1)$$

(this value will nearly always be positive. If it is negative, set Diff(*k*, f0, f1) to zero).

12. Store Diff(*k*, f0, f1) into the corresponding CFO_1 for each key *k*.
13. Determine the difference in signal at each key when the frequency changes from FREQ0 to FREQ2, using the following equation:

    Diff(*k*, f0, f2) = Ref(*k*, f0) – Ref(*k*, f2)

    (this value will nearly always be positive. If it is negative, set Diff(*k*, f0, f1) to zero).
14. Store Diff(*k*, f0, f2) into the corresponding CFO_2 for each key *k*.
15. Configure FHM = 2.

These functions are programmed on a per-key basis. See Table 7-1 on page 46.

CFO_1/2 Default value: 0

CFO_1/2 Possible range: 0 – 255

6.4 Address 237: Negative Recal Delay – NRD

Table 6-8. NRD

Address	Bit 7	Bit 6	Bit 5	Bit 4	Bit 3	Bit 2	Bit 1	Bit 0
237	NRD							

If an object unintentionally contacts a key, resulting in a detection for a prolonged interval, it is usually desirable to recalibrate the key in order to restore its function, perhaps after a time delay of some seconds.

The Negative Recal Delay timer monitors detections. If a detection event exceeds the timer's setting, the key is automatically recalibrated. After a recalibration has taken place, the affected key once again functions normally even if it is still being contacted by the foreign object. This feature is set on a global basis using the NRD setup parameter.

NRD can be disabled by setting it to zero (infinite timeout) in which case the key never auto-recalibrates during a continuous detection (but the host could still command it).

NRD above 0 is expressed in 0.5 s increments. Thus if NRD = 120, the timeout value is actually 60 seconds.

This function is programmed on a global basis. See Table 7-1 on page 46.

NRD Typical values: 20 – 60 (10 s – 30 s)

NRD Default value: 20 (10 s)

NRD Range: 0 – 255 (∞, 0.5 s – 127.5 s)

NRD Accuracy: to within ± 250 ms

6.5 Address 238: SLEEP, MSYNC, NHYST

6.5.1 Sleep Duration – SLEEP

Table 6-9. SLEEP

Address	Bit 7	Bit 6	Bit 5	Bit 4	Bit 3	Bit 2	Bit 1	Bit 0
238	RESERVED		NHYST		MSYNC	SLEEP		

With the sleep feature enabled, the QT1245 is designed to sleep as much as possible to conserve power. Periodically, the part wakes automatically, scans the keyboard matrix and then returns to sleep. The length of time the part sleeps before automatically waking up can be configured to one of eight different values, via a look-up table. As with most other setups, the look-up table index must be written to the setups (see Table 7-1 on page 46).

The QT1245 will not sleep while keys are in detect or while keys are calibrating.

If the sleep feature is disabled, the device never sleeps. Sleep might need to be disabled if the device is being used in an FMEA or EN 60730 compliant design because all operations are stopped within the device while the part is asleep and the host is not able to distinguish between faulty operation and EN 60730 counters appearing to run slow because the part is intermittently sleeping.

It should also be noted that the configured drift compensation interval is valid only while the device is not sleeping, and will effectively be stretched each time the device sleeps because the device is fully halted during sleep and cannot perform drift compensation. If sleep is enabled, a shorter drift compensation interval may be required.

Note that when a key changes state, the $\overline{\text{CHANGE}}$ pin can be made to go active and the device can go into 'fast mode' automatically if the WAKE feature is enabled on that key (see Section 6.2.3 on page 33).

This function is programmed on a global basis. See Table 7-1 on page 46.

SLEEP default value: 0 (sleep disabled)

SLEEP range: 0 – 7 (Off, 16 ms – 1s; translation via LUT)

6.5.2 Mains Sync – MSYNC

Table 6-10. MSYNC

Address	Bit 7	Bit 6	Bit 5	Bit 4	Bit 3	Bit 2	Bit 1	Bit 0
238	RESERVED		NHYST		MSYNC	SLEEP		

The MSYNC feature uses the M_SYNC pin.

External fields can cause interference leading to false detections or sensitivity shifts. Most fields come from AC power sources. RFI noise sources are heavily suppressed by the low impedance nature of the QT circuitry itself.

Noise such as from 50Hz or 60Hz fields becomes a problem if it is uncorrelated with acquisition signal sampling. Uncorrelated noise can cause aliasing effects in the key signals. To suppress this problem the M_SYNC input allows bursts to synchronize to the noise source.

The noise sync operating mode is set by parameter MSYNC in setups.

The synchronization only occurs at the burst for the lowest numbered enabled key in the matrix. The device waits for the synchronization signal for up to 100 ms after the end of a preceding full matrix scan, then when a negative sync edge is received, the matrix is scanned in its entirety again.

The sync signal drive should be a buffered logic signal, or perhaps a diode-clamped signal, but never a raw AC signal from the mains. The device synchronizes to the falling edge.

Since noise synchronization is highly effective and inexpensive to implement, it is strongly advised to take advantage of it anywhere there is a possibility of encountering low frequency (50/60 Hz) electric fields. Atmel QmBtn software can show such noise effects on signals, and hence assist in determining the need to make use of this feature.

If the synchronization feature is enabled but no synchronization signal exists, the sensor continues to operate but with a delay of 100 ms before the start of each matrix scan, and hence has a slow response time.

This function is programmed on a global basis. See Table 7-1 on page 46.

MSYNC Default value: 0 (Off)

MSYNC Possible range: 0, 1 (Off, On)

6.5.3 Negative Hysteresis – NHYST

Table 6-11. NHYST

Address	Bit 7	Bit 6	Bit 5	Bit 4	Bit 3	Bit 2	Bit 1	Bit 0
238	RESERVED		NHYST		MSYNC	SLEEP		

The device employs programmable hysteresis levels of 6.25%, 12.5%, 25%, or 50% The hysteresis is a percentage of the distance from the threshold level back towards the reference, and defines the point at which a touch detection drops out. A 12.5% hysteresis point is closer to the threshold level than to the signal reference level.

Hysteresis prevents chatter and works to make key detection more robust. Hysteresis is only used after the key has been declared to be in detection, in order to determine when the key should drop out.

Excessive amounts of hysteresis can result in stuck keys that do not release. Conversely, low amounts of hysteresis can cause key chatter due to noise or minor amounts of finger motion.

NHYST is set using one global value which is applied across all keys.

See Table 7-1 on page 46.

NHYST Typical values: 0, 1 (6.25%, 12.5%)

NHYST Default value: 1 (12.5%)

NHYST Possible range: 0, 1, 2, 3 (6.25%, 12.5%, 25%, 50%)

6.6 Address 239: Awake Timeout – AWAKE

Table 6-12. AWAKE

Address	Bit 7	Bit 6	Bit 5	Bit 4	Bit 3	Bit 2	Bit 1	Bit 0
239	AWAKE							

The AWAKE timeout feature determines the period of time that elapses from the last key release before the part tries to sleep.

Once the part has been awakened by a touch change on a WAKE enabled key, key response is fast while the keyboard is in use, until sleep mode is resumed. Sleep mode will not resume unless there is a period of key inactivity. This period is defined by the AWAKE setup. Sleep mode is inhibited while keys are in detect.

Note: If the sleep feature has been disabled, the device never sleeps and the AWAKE setup has no effect.

The AWAKE period can be configured to a value between 100 ms and 25.5 s, in increments of 100 ms.

This function is programmed on a global basis. See Table 7-1 on page 46.

AWAKE default value: 25 (2.5 s)

AWAKE range: 1 – 255 (100 ms – 25.5 s)

AWAKE Timeout accuracy: to within ±50 ms

6.7 Address 240: Drift Hold Time – DHT

Table 6-13. DHT

Address	Bit 7	Bit 6	Bit 5	Bit 4	Bit 3	Bit 2	Bit 1	Bit 0
240	DHT							

Drift Hold Time (DHT) is used to inhibit drift on all keys while one or more keys are activated. DHT defines the length of time the drift is halted after a key detection.

This feature is particularly useful in cases of high-density keypads where touching a key or hovering a finger over the keypad would cause untouched keys to drift, and therefore create a sensitivity shift, and ultimately inhibit any touch detection.

DHT can be configured to a value of between 100 ms and 25.5 s, in increments of 100 ms. Setting this parameter to 0 disables this feature and the drift compensation on any key is not dependent on the state of other keys.

This function is programmed on a global basis. See Table 7-1 on page 46.

DHT default value: 0 (Off)

DHT range: 0 – 255 (Off, 100 ms – 25.5 s)

6.8 Address 241: PDRIFT, SSYNC

6.8.1 Positive Drift Compensation – PDRIFT

Table 6-14. PDRIFT

Address	Bit 7	Bit 6	Bit 5	Bit 4	Bit 3	Bit 2	Bit 1	Bit 0
241	SSYNC					PDRIFT		

See Section 6.1.2 on page 30.

6.8.2 Oscilloscope Sync – SSYNC

Table 6-15. SSYNC

Address	Bit 7	Bit 6	Bit 5	Bit 4	Bit 3	Bit 2	Bit 1	Bit 0
241	SSYNC					PDRIFT		

The S_SYNC pin can output a positive pulse oscilloscope sync that brackets the burst of a selected key. Only one burst can output a sync pulse as determined by the setups parameter SSYNC.

This feature is invaluable for diagnostics. Without it, observing signals clearly on an oscilloscope for a particular burst is very difficult. This function is supported in Atmel QmBtn PC software.

The oscilloscope sync and the $\overline{\text{CHANGE}}$ output share an I/O pin, and will interfere with each other. SSYNC is intended as an aid only during development, and should be disabled for production.

This function is programmed on a global basis. See Table 7-1 on page 46.

SSYNC Default value: 24 (Off)

SSYNC Possible range: 0 – 23 (Key n), 24 – 31 (Off)

6.9 Address 242 – 243: LSL, KGTT

6.9.1 Lower Signal Limit – LSL

Table 6-16. LSL

Address	Bit 7	Bit 6	Bit 5	Bit 4	Bit 3	Bit 2	Bit 1	Bit 0
242	LSL							
243	KGTT					LSL		

This setup determines the lowest acceptable value of signal level for all keys. If any key reference level falls below this value, the device declares an error condition in the key data set (see Section 5.8 on page 27) and in the device status byte (see Section 5.5 on page 25).

Testing is required to ensure that there are adequate margins in this determination. Key size, shape, panel material, burst length, and dwell time all factor into the detected signal levels.

This parameter occupies 2 bytes (11 bits) of the setups table. Address 242 occupies the LSB, 243 the MSB.

This function is programmed on a global basis. See Table 7-1 on page 46.

LSL Default value: 100 (recommended value)

LSL Possible range: 0 – 2047

6.9.2 Key Gain Test Threshold – KGTT

Table 6-17. KGTT

Address	Bit 7	Bit 6	Bit 5	Bit 4	Bit 3	Bit 2	Bit 1	Bit 0
242	LSL							
243	KGTT				–	LSL		

The Key Gain test takes a special sample from a key using half the usual burst length and compares the resulting value against the key normal signal. The test passes if the signal has decreased by the Key Gain Test Threshold (KGTT). This means that the following equation must be valid for the test to pass. Each enabled key is tested.

Normal Signal – Test Signal > KGTT

The Key Gain Test Threshold can be configured to a value between 4 and 60, via LUT (see Table 7-1 on page 46). KGTT occupies 4 bits only, sharing the same word as the Lower Signal Limit.

This function is programmed on a global basis. See Table 7-1 on page 46.

KGTT Default value: 6 (28)

KGTT Possible range: 0 – 15 (4 – 64)

6.10 Address 244: DWELL, RIB, THRM, FHM

6.10.1 Dwell Time – DWELL

Table 6-18. DWELL

Address	Bit 7	Bit 6	Bit 5	Bit 4	Bit 3	Bit 2	Bit 1	Bit 0
244	FHM	FHM	THRM		RIB	DWELL		

The Dwell parameter in setups causes the acquisition pulses to have differing charge capture durations. Generally, shorter durations provide for enhanced surface moisture suppression, while longer durations are required where the keypanel design includes higher-resistance tracks such as silver and ITO. Longer durations are also usually more compatible with EMC requirements. Longer dwell times permit the use of larger series resistors in the X and Y lines to suppress RFI effects, without compromising key gain.

This function is programmed on a global basis. See Table 7-1 on page 46.

DWELL Default value: 0 (125 ns)

DWELL Possible range: 0 – 7 (125 ns – 4.5 µs)

6.10.2 Restart Interrupted Burst – RIB

Table 6-19. RIB

Address	Bit 7	Bit 6	Bit 5	Bit 4	Bit 3	Bit 2	Bit 1	Bit 0
244	FHM	FHM	THRM		RIB	DWELL		

The RIB parameter in setups allows a burst to be interrupted, and restarted, by host communications over the serial bus. The QT1245 has limited processing resources available such that a burst and host communication cannot both be serviced simultaneously. One must give way to the other. This setup lets the designer prioritize one over the other.

If RIB is configured on, a burst can be interrupted by a host communication, and is automatically restarted.

If RIB is configured off, bursts will not be restarted. The interruption may introduce some signal noise.

This function is programmed on a global basis. See Table 7-1 on page 46.

RIB Default value: 0 (off)

RIB Possible range: 0, 1 (off, on)

6.10.3 Threshold Multiplier – THRM

Table 6-20. THRM

Address	Bit 7	Bit 6	Bit 5	Bit 4	Bit 3	Bit 2	Bit 1	Bit 0
244	FHM	FHM	THRM		RIB	DWELL		

It is sometimes useful to be able to operate the device with much higher detect thresholds than can be set with NTHR and PTHR alone. The Threshold Multiplier (THRM) is a multiplier, set via LUT, which extends the range of NTHR and PTHR considerably. The operating detect threshold for a key is arrived at by multiplying the threshold for that key (set with NTHR or PTHR) by the THRM multiplier. Note that the detect threshold range is extended at the expense of the step size. Figure 6-21 shows the extended threshold range for each value of THRM.

Table 6-21. Extended Detect Threshold

THRM	Multiplier	Extended Threshold
0	x1	4 – 18
1	x2	8 – 36
2	x4	16 – 72
3	x8	32 – 144

This function is programmed on a global basis. See Table 7-1 on page 46.

THRM Default value: 0 (x1)

THRM Possible range: 0, 1, 2, 3 (x1, x2, x4, x8)

6.10.4 Frequency Hopping Mode – FHM

Table 6-22. FHM

Address	Bit 7	Bit 6	Bit 5	Bit 4	Bit 3	Bit 2	Bit 1	Bit 0
244	FHM		THRM		RIB	DWELL		

Frequency hopping can be disabled altogether or enabled to one of three different active modes with FHM.

FHM = 0 – Frequency hopping disabled

If frequency hopping is disabled, the QT1245 always uses the same frequency, defined by FREQ0.

FHM = 1 or 2

If frequency hopping is enabled with FHM = 1 or FHM = 2, the QT1245 continually monitors the noise across all keys and switches frequencies dynamically to try and find the frequency with the lower noise amplitude. Up to three different frequencies can be selected using FREQ0, FREQ1 and FREQ2. If frequency hopping between only two frequencies is desired, the same frequency should be selected for two of these functions.

The signal levels can vary slightly with frequency, and so the reference for each key might need corresponding adjustment, in one way or another, during frequency hopping to compensate and to prevent false detections and unresponsive keys. The mechanism used to adapt the references is different depending on the frequency hop mode set.

FHM = 1 – Calibrate after hop

If frequency hopping is enabled with FHM = 1, the QT1245 compensates for the variations in signal level by recalibrating each key immediately after each frequency hop. A negative aspect to this mode is the danger that a key is being touched at the time of the frequency hop. If this were to happen, the touched key would be recalibrated to the touching finger and the detect would be cancelled. However, on subsequent removal of the touch (for a time greater than or equal to the PRD function) the key would be recalibrated once again and the detect flagged when the touch is re-established.

FHM = 2 – Adjust each key reference during hop

If frequency hopping is enabled with FHM = 2, the QT1245 adjusts each key reference at each frequency hop. The amount of the adjustment must first be configured using the setups CFO_1 and CFO_2.

The QT1245 will not switch the frequency during calibration if FHM is set at 1 or 2.

FHM = 3 – Frequency sweep

If frequency hopping is enabled with FHM = 3, the QT1245 repeatedly sweeps the sampling frequency through a range bounded by two frequencies defined by FREQ0 and FREQ1. The frequency is changed after each and every matrix scan. The QT1245 is shipped with the frequency hopping mode preset at FHM = 3.

In this hop mode, the reference for each key is not adjusted as the frequency is changed, so the signal levels must not vary significantly over the selected frequency range otherwise false detects or unintentional touch dropouts could occur. Variations in signal levels can be limited by restricting the frequency sweep range. If the signal variation for any particular key is found to be too great, the range of frequencies should be narrowed by decreasing the difference in values set at FREQ0 and FREQ1.

This function is programmed on a global basis. See Table 7-1 on page 46.

FHM Default value: 3 = Frequency sweep

FHM Possible range: 0 – 3 (0 = off

1 = Calibrate all keys after hop

2 = Adjust each key's reference during hop

3 = Frequency sweep)

6.11 Address 245: Frequency 0 – FREQ0

Table 6-23. FREQ0

Address	Bit 7	Bit 6	Bit 5	Bit 4	Bit 3	Bit 2	Bit 1	Bit 0
245	FREQ0							

FREQ0 is used in all frequency hopping modes and even if frequency hopping is disabled. In all modes, it defines the idle time between pulses in the burst. Larger values yield longer times between pulses and thus a lower fundamental frequency.

FHM = 0 – Frequency hopping disabled

If frequency hopping is disabled, the QT1245 always uses the same frequency, defined by FREQ0. Frequency hopping might not be desirable in all applications and it might be more appropriate to preselect a burst frequency at the factory which is known not to coincide with other operating frequencies within the end product or other frequencies in the operating environment. In such cases, FHM can be set at zero, and the burst frequency set with FREQ0.

With DWELL set at the default (minimum), the fundamental frequency can be set in the range 10.5 kHz – 590 kHz. The frequency for a specific DWELL and FREQ0 combination should be measured using an oscilloscope (temporarily disable frequency hopping to make the measurement easier).

FHM = 1 or FHM = 2 – Frequency hopping between three frequencies

If frequency hopping is enabled with FHM = 1 or 2, the QT1245 can hop between three frequencies configured using FREQ0, FREQ1 and FREQ2. FREQ0 must be set as the highest frequency otherwise the behavior is undefined. That is, FREQ1 and FREQ2 must be set to values greater than or equal to FREQ0.

FHM = 3 – Frequency sweep

With FHM = 3, the QT1245 sweeps a range of frequencies, with the upper frequency boundary (shortest idle time) defined by FREQ0. FREQ1 must be set to a value greater than FREQ0. The behavior is otherwise undefined.

FREQ0 = 0 is invalid and must be avoided when FHM = 3.

This function is programmed on a global basis.

FREQ0 Default value: 1 (delay cycle)

FREQ0 Possible range: 1 – 256 (Highest frequency to Lowest frequency, 256 is obtained with setting 0)

6.12 Address 246: Frequency1 – FREQ1

Table 6-24. FREQ1

Address	Bit 7	Bit 6	Bit 5	Bit 4	Bit 3	Bit 2	Bit 1	Bit 0
246	FREQ1							

FREQ1 is only used if FHM is set to a non-zero value. It is not used if frequency hopping is disabled with FHM = 0.

With FHM = 1 or FHM = 2, FREQ1 allows configuration of one of three operating frequencies by defining the idle time between pulses in the burst. Larger values yield longer times between pulses and thus a lower fundamental frequency.

With FHM = 3, the QT1245 sweeps a range of frequencies, with the lower frequency boundary (longest idle time) defined by FREQ1. FREQ1 must be set to a value greater than FREQ0. The behavior is otherwise undefined.

This function is programmed on a global basis. See Table 7-1 on page 46.

FREQ1 Default value: 6 (delay cycles)

FREQ1 Possible range: 1 – 256 (Highest frequency to Lowest frequency, 256 is obtained with setting 0)

6.13 Address 247: Frequency2 – FREQ2

Table 6-25. FREQ2

Address	Bit 7	Bit 6	Bit 5	Bit 4	Bit 3	Bit 2	Bit 1	Bit 0
247	FREQ2							

FREQ2 is only used if FHM = 1 or FHM = 2. It is not used if FHM is set to zero or 3.

With FHM = 1 or FHM = 2, FREQ2 allows configuration of one of three operating frequencies by defining the idle time between pulses in the burst. Larger values yield longer times between pulses and thus a lower fundamental frequency.

This function is programmed on a global basis. See Table 7-1 on page 46.

FREQ2 Default value: 63 (delay cycles)

FREQ2 Possible range: 1 – 256 (Highest frequency to Lowest frequency, 256 is obtained with setting 0)

6.14 Address 248: NSTHR, NIL

6.14.1 Noise Threshold – NSTHR

Table 6-26. NSTHR

Address	Bit 7	Bit 6	Bit 5	Bit 4	Bit 3	Bit 2	Bit 1	Bit 0
248	NIL				NSTHR			

NSTHR is only used if FHM = 1 or FHM = 2. It is not used if FHM is set to 0 or 3.

When FHM = 1 or 2, the QT1245 considers a hop to one of the other frequencies when the noise at the current frequency consistently exceeds the threshold configured with NSTHR. NSTHR is used by the frequency hopping algorithms to determine if a signal delta should be considered as noise. A delta, of either polarity, greater than or equal to NSTHR is considered as possible noise and forces the Noise Integrator counter to be incremented.

This function is programmed on a global basis. See Table 7-1 on page 46.

NSTHR Default value: 2 (11 counts)

NSTHR Possible range: 0 – 15 (5 – 50 counts)

6.14.2 Noise Integrator Limit – NIL

Table 0-1. NIL

Address	Bit 7	Bit 6	Bit 5	Bit 4	Bit 3	Bit 2	Bit 1	Bit 0
248	NIL				NSTHR			

NIL is only used if FHM = 1 or FHM = 2. It is not used if FHM is set to zero or 3.

The QT1245 considers a hop to one of the other frequencies when the noise at the current frequency consistently exceeds the threshold configured with NSTHR. To prevent true touch events and other brief signal anomalies being considered as noise, the QT1245 employs counters, termed noise integrators, to track the number of signal deltas that exceed the noise threshold. It maintains two such counters, one for positive deltas and one for negative deltas.

The QT1245 considers a frequency hop only if both these counters reach the noise integrator limit (NIL). The counters are reset to zero at the end of each matrix scan.

This mechanism provides a robust way of detecting strong noise while suppressing unnecessary frequency hopping.

This function is programmed on a global basis. See Table 7-1 on page 46.

NIL Default value: 3

NIL Possible range: 0 – 15 (0 – 2 = factory use only)

6.15 Address 249 – 250: Host CRC – HCRC

Table 6-27. HCRC

Address	Bit 7	Bit 6	Bit 5	Bit 4	Bit 3	Bit 2	Bit 1	Bit 0
249 – 250	HCRC							

The setups block terminates with a 16-bit CRC (HCRC) of the entire setups block, which the host must calculate and upload. The setups CRC is computed repeatedly and checked against this value. An error is reported in the Device Status (see Section 5.5 on page 25) if the two values do not match. The formula for calculating this CRC is shown in Appendix A. The LSB occupies address 249 and the MSB occupies address 250.

6.16 Positive Recalibration Delay – PRD

A recalibration can occur automatically if the signal swings more positive than the positive threshold level. This condition can occur if there is positive drift but insufficient positive drift compensation, or, if the reference moved negative due to a NRD autorecalibration, and thereafter the signal rapidly returned to normal (positive excursion).

As an example of the latter, if a foreign object or a finger contacts a key for period longer than the Negative Recal Delay (NRD), the key is by recalibrated to a new lower reference level. Then, when the condition causing the negative swing ceases to exist (for example, the object is removed) the signal can suddenly swing back positive to near its normal reference.

It is almost always desirable in these cases to cause the key to recalibrate quickly so as to restore normal touch operation. The time required to do this is governed by PRD. In order for this to work, the signal must rise through the positive threshold level PTHR continuously for the PRD period.

After the PRD interval has expired and the autorecalibration has taken place, the affected key once again functions normally.

PRD Accuracy: to within ± 50 ms

Delay: PRD is fixed at 1000 ms for all keys, and cannot be altered.

7. Lookup Table

Table 7-1. Lookup Table

	Parameter																
Index	NTHR/PTHR counts	NDRIFT secs	NDIL counts	FDIL counts	WAKE	BL pulses	AKS	CFO_1	CFO_2	PDRIFT secs	NRD secs	SSYNC	SLEEP ms	NHYST	MSYNC	AWAKE secs	DHT secs
	Per Key									Global							
0	4	0.2	Key off	1	Off	16	**Off**	**0**	**0**	0.2	0 (infinite)	**24 (Off)**	**Off**	6.25%	**Off**	**unused**	**Off**
1	6	0.4	2-	2	**On**	32	On	0 – 255	0 – 255	0.4	0.5 – 127	Key 0 – 23	16	**12.5%**	On	0.1 – 25.5	0.1 – 25.5
2	8	0.8	**4**	4		**48**				0.8	**20 (10 s)**		32	25%		**25 (2.5 s)**	
3	**10**	1.2	6	**6**		64				1.2			64	50%			
4	12	**2**	8	8						**2**			125				
5	14	3.3	10	10						3.3			250				
6	16	6	12	12						6			500				
7	18	10	15	15						10			1,000				
8																	
9																	
10																	
11																	
12																	
13																	
14																	
15																	

Typical values: For most touch applications, use the values shown in the boxed cells. Bold text items indicate default settings. The number to send to the device is the index number in the leftmost column (0 – 15), not numbers from the table. The device uses a lookup table internally to translate the indices 0 – 15 to the parameters for each function.

NRD is an exception: It can range from 0 – 255 which is translated from 1 = 0.5 s to 255 = 127.5 s, in increments of 0.5 s, with zero = infinity.

AWAKE is an exception: it can range from 1 – 255 which is translated from 1 = 0.1 s to 255 = 25.5 s, in increments of 0.1 s. Zero is illegal.

DHT is an exception: it can range from 0 – 255 which is translated from 1 = 0.1 s to 255 = 25.5 s, in increments of 0.1 s. Zero disables DHT.

CFO_1 and **CFO_2** are exceptions. They can range from 0 – 255.

Table 7-2. Lookup Table

Index	LSL	KGTT	DWELL ns	RIB	FHM	FREQ0 delay cycles	FREQ1 delay cycles	FREQ2 delay cycles	NSTHR counts	NIL counts	THRM multiplier
0	0 – 2047	4	**125**	**Off**	Off	256 (lowest frequency)	256 (lowest frequency)	256 (lowest frequency)	5	**0 (factory use only)**	**1**
1	**100**	8	375	On	Recal on hop	1 – 255	1 – 255	1 – 255	8	**1 (factory use only)**	2
2		12	750		Adjust Ref on hop	**1**	**6**	**63**	**11**	**2 (factory use only)**	**4**
3		16	1125		**Sweep**				14	**3**	
4		20	1500						17	4	8
5		24	2250						20	5	
6		**28**	3375						23	6	
7		32	4500						26	7	
8		36							29	8	
9		40							32	9	
10		44							35	10	
11		48							38	11	
12		52							41	12	
13		56							44	13	
14		60							47	14	
15		64							50	15	

LSL is an exception: it can range from 0 – 2047.

FREQ0, FREQ1, FREQ2 are exceptions. They can range from 0 – 255, with zero = 256 counts.

8. Specifications

8.1 Absolute Maximum Specifications

Parameter	Specification
Operating temp	–40°C to +105°C
Storage temp	–55°C to +125°C
Vdd	6 V
Max continuous pin current, any control or drive pin	±10 mA
Short circuit duration to ground, any pin	infinite
Short circuit duration to Vdd, any pin	infinite
Voltage forced onto any pin	–0.5 V to (Vdd + 0.5) V
EEPROM setups maximum writes	100,000 write cycles
CAUTION: Stresses beyond those listed may cause permanent damage to the device. This is a stress rating only and functional operation of the device at these or other conditions beyond those indicated in the operational sections of this specification is not implied. Exposure to absolute maximum specification conditions for extended periods may affect device reliability.	

8.2 Recommended Operating Conditions

Parameter	Specification
Vdd	+3 V to +5 V
Supply ripple + noise	20 mV p-p max
Cx transverse load capacitance per key	2 – 20 pF

8.3 DC Specifications

Cs = 4.7 nF, Rs = 470 kΩ, Ta (Ambient Temperature)= recommended range, unless otherwise noted

Parameter	Description	Min	Typ	Max	Units	Notes
Iddr	Average supply current, running	–	6.6	–	mA	Vdd = 5.0 V
Idds	Average supply current, sleeping	–	6.00	–	µA	Vdd = 5.0 V
Vil	Low input logic level	–	–	0.3 × Vdd	V	
Vih	High input logic level	0.6 × Vdd	–	–	V	
Vol	Low output voltage	–	–	0.6	V	Vdd = 3.0 V
Voh	High output voltage	2.3	–	–	V	Vdd = 3.0 V
Iil	Input leakage current	–	–	1	µA	

Cs = 4.7 nF, Rs = 470 kΩ, Ta (Ambient Temperature)= recommended range, unless otherwise noted

Parameter	Description	Min	Typ	Max	Units	Notes
Ar	Acquisition resolution	–	10	–	bits	
Rp	Internal pull-up resistors	20	–	50	kΩ	$\overline{\text{CHANGE}}$ and $\overline{\text{DRDY}}$ pins
Rrst	Internal $\overline{\text{RST}}$ pull-up resistor	30	–	60	kΩ	

8.4 Timing Specifications

Parameter	Description	Min	Typ	Max	Units	Notes	
T_{BS}	Burst spacing	–	290 320 350 390	–	µs	BL = 16 BL = 32 BL = 48 BL = 64	All with FHM = 0
Fc	Burst center frequency	9.7	–	590	kHz		

Note: The values quoted in the above table are valid with the default settings, except where noted, and in the absence of serial communications.

8.5 Mechanical Dimensions

8.5.1 QFN

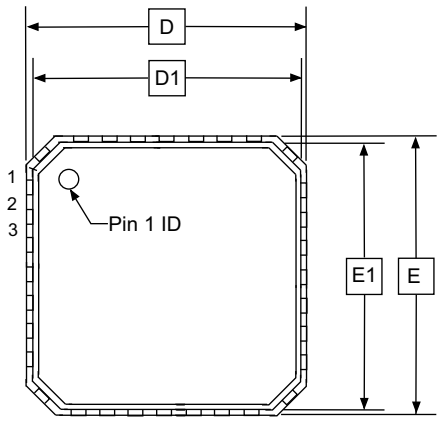

TOP VIEW

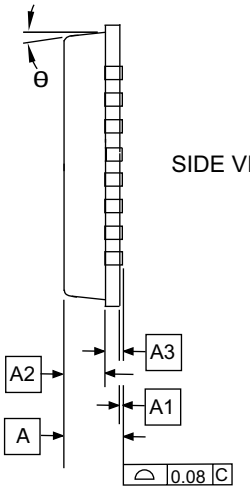

SIDE VIEW

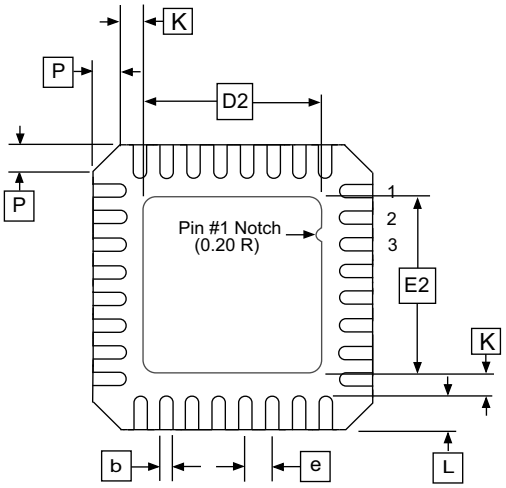

BOTTOM VIEW

COMMON DIMENSIONS
(Unit of Measure = mm)

SYMBOL	MIN	NOM	MAX	NOTE
A	0.80	0.85	1.00	
A1	0.00	0.01	0.05	
A2	–	0.65	0.70	
A3		0.20 REF		
b	0.18	0.23	0.30	
D	4.90	5.00	5.10	
D1	4.70	4.75	4.80	
D2	2.95	3.10	3.25	
E	4.90	5.00	5.10	
E1	4.70	4.75	4.80	
E2	2.95	3.10	3.25	
e		0.50 BSC		
L	0.30	0.40	0.50	
P	–	–	0.60	
θ	–	–	12°	
K	0.20	–	–	

NOTES:

JEDEC Standard MO-220, Fig 2 (Anvil Singulation), VHHD-2.

Atmel Package Drawing Contact: packagedrawings@atmel.com	TITLE **32M1-A**, 32-pad, 5x5x1.0 mm Body, Lead Pitch 0.50mm, 3.10mm2 Exposed Pad, Very-Thin, Fine Pitch Quad Flat No Lead Package (VQFN)	GPC ZVY	DRAWING NO. 32M1-A	REV. G

8.5.2 TQFP

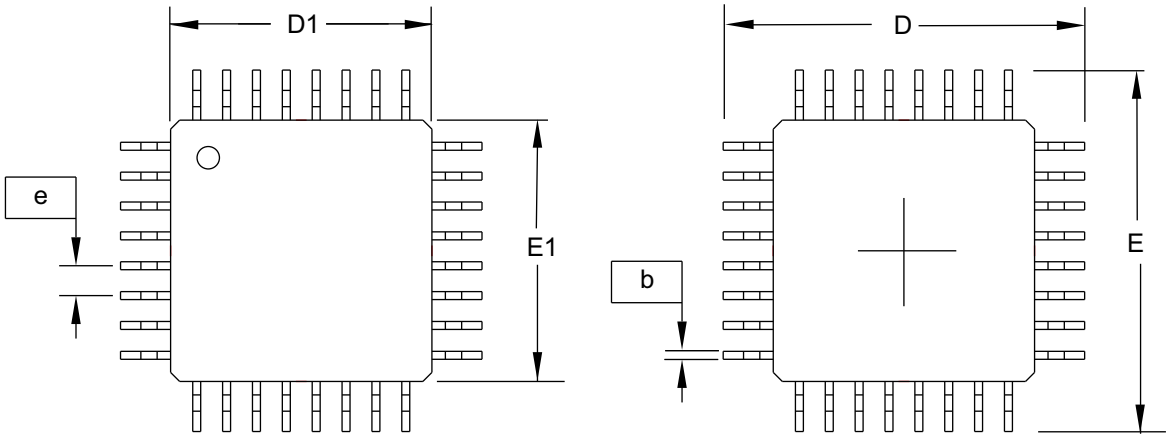

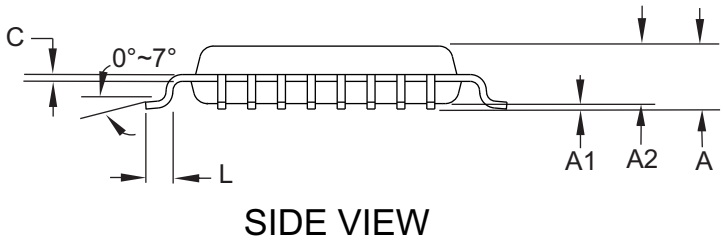

COMMON DIMENSIONS
(Unit of Measure = mm)

SYMBOL	MIN	NOM	MAX	NOTE
A	–	–	1.20	
A1	0.05	–	0.15	
A2	0.95	1.00	1.05	
D	8.75	9.00	9.25	
D1	6.90	7.00	7.10	Note 2
E	8.75	9.00	9.25	
E1	6.90	7.00	7.10	Note 2
b	0.30	–	0.45	
C	0.09	–	0.20	
L	0.45	–	0.75	
e	0.80 TYP			

Notes:
1. This package conforms to JEDEC reference MS-026, Variation ABA.
2. Dimensions D1 and E1 do not include mold protrusion. Allowable protrusion is 0.25 mm per side. Dimensions D1 and E1 are maximum plastic body size dimensions including mold mismatch.
3. Lead coplanarity is 0.10 mm maximum.

Atmel Package Drawing Contact: packagedrawings@atmel.com	TITLE **32A**, 32-lead 7.0 x 7.0x1.0 mm Body, 0.80 mm Lead Pitch, Thin Profile Plastic Quad Flat Package (TQFP)	GPC AUT	DRAWING NO. 32A	REV. D

8.6 Part Marking

8.6.1 QFN

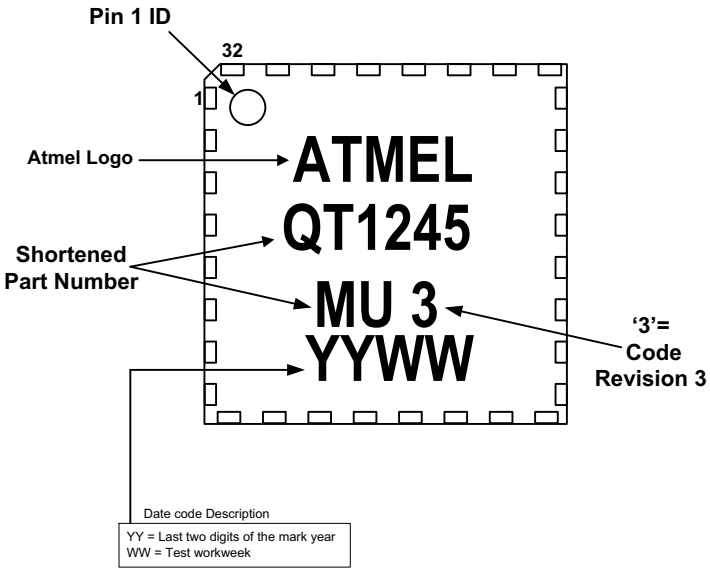

8.6.2 TQFP

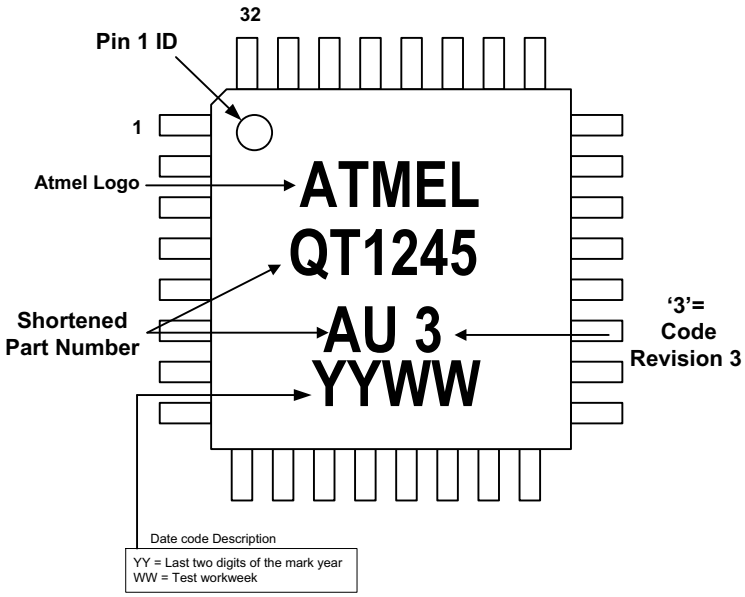

8.7 Part Number

Part Number	Description
AT42QT1245-AU	32-pin 7 × 7 mm TQFP RoHS compliant IC
AT42QT1245-AUR	32-pin 7 × 7 mm TQFP RoHS compliant IC - Tape and reel
AT42QT1245-MU	32-pad 5 × 5 mm QFN RoHS compliant IC
AT42QT1245-MUR	32-pad 5 × 5 mm QFN RoHS compliant IC - Tape and reel

The part number comprises:

AT = Atmel

42 = Touch Business Unit

QT = Charge-transfer technology

1245 = (1) Keys (24) number of channels (5) variant number

AU = TQFP chip

MU = QFN chip

R = Tape and reel

8.8 Moisture Sensitivity Level (MSL)

MSL Rating	Peak Body Temperature	Specifications
MSL3	260°C	IPC/JEDEC J-STD-020

Appendix A. 16-bit CRC Software C Algorithm

```
// 16 bits crc calculation. Initial crc entry value must be 0.
// The message is not augmented with 'zero' bits.
// polynomial = X16 + X15 + X2 + 1
// data is an 8 bit number, unsigned
// crc is a 16 bit number, unsigned
// repeat this function for each data block byte, folding the result
//   back into the call parameter crc

unsigned long sixteen_bit_crc(unsigned long crc, unsigned char data)
{     unsigned char index;// shift counter

      crc ^= (unsigned long)(data) << 8;
      index = 8;
      do                                              // loop 8 times
      {     if(crc & 0x8000)
            {     crc= (crc << 1) ^ 0x1021;
            }
            else
            {     crc= crc << 1;
            }
      } while(--index);
      return crc;
}
```

A CRC calculator for Windows® is available free of charge from Atmel.

Appendix B. Conducted Noise Immunity

Electrically conducted noise can increase the noise on the touch signals considerably and can lead to both false detects and missed touches. There is a specific test for conducted immunity, as part of typical EMC testing, which injects noise into the device under test across a broad range of frequencies and with significant amplitude. This test is designed to test the immunity of devices and products against environmental noise that is generated by commercial radio transmitters and other sources. Passing this test can be a challenge and might appear daunting, but with good design practice from the outset coupled with fine tuning of the QT1245 frequency hopping Setups and, designs based on the QT1245 show excellent noise immunity and can pass the conducted noise test by some margin.

From the outset, the design must target achieving the best possible touch sensitivity while minimizing noise. A clean design can achieve excellent signal delta on touch, but its easy to destroy this quality by pushing the overall product requirements too far and poor attention to detail during the design. The more imperfections that exist in a design, the more the sensitivity will be eroded and the conducted immunity performance with it.

A good target for signal delta on touch is 100 or even 150 counts.

Best touch performance is achieved with thinner overlay panels, optimum key electrode design, clean tracking between the QT1245 and the keys with low stray capacitance between X and Y traces and low stray capacitance from X and Y traces to ground, coupled with appropriate selection of the external matrix components. See the documents referred to in “Associated Documents” on page 57 for further details on best practice for designing a touch sensor interface.

The following paragraphs make some recommendations for initial values or type for the additional matrix components to accompany a QT1245 design together with some Setups the have been found to produce good noise immunity results.

Cs - NPO/COG

Use COG type for the charge sample capacitors (Cs0 - Cs7). This type of capacitor exhibits excellent stability, albeit at a higher cost, and is preferred over X7R and other types. Lower values can be used to reduce the cost or help with availability provided the charge transfer is not too high such as to saturate Cs. An excellent layout with low stray capacitance will typically allow Cs to be reduced as low as 1 nF.

Rs - 1 MΩ

Increasing the digital conversion ramp resistors (Rs0 – Rs7) increases sensitivity. The optimum selection for Rs is one that balances highest achievable sensitivity against conversion time and other undesirable side effects such as increased noise and possibly some reduction in temperature stability. Any increase in noise is typically insignificant compared to conducted noise observed during conducted immunity EMC testing.

Rs can be increased as high as 5 MΩ, although this is probably extreme in most cases. A good initial value is 1 MΩ. This value increases sensitivity to a good level with acceptable additional signal noise and often achieves the best compromise in Signal-to-Noise Ratio (SNR). The increased sensitivity allows a higher detect threshold to be employed, preventing noise spikes exceeding the threshold and thus preventing false detects.

Ry - 47 kΩ

Immunity to conducted electrical noise can be increased considerably by increasing the series resistors in the matrix Y lines (Ry0 - Ry7) at the expense of moisture tolerance. There is a practical limit to how far their value can be increased because higher values must be accompanied by longer dwell times, possibly in excess of the longest settings available in the device. In any case excessively long dwell times would slow the response time intolerably.

DWELL

Increasing the Ry values alone results in a reduction in charge transfer and sensitivity. This can be recovered by increasing the charge transfer time, or dwell time, through higher DWELL settings. To achieve the optimum DWELL setting, start with the maximum value and observe the reference values. Then reduce the dwell, con-

tinue to observe the reference values, and choose the lowest DWELL setting where the reference values are not significantly reduced from their maximum.

Longer dwell times also result in reduced moisture tolerance, and so a careful balance might be necessary between these conflicting requirements.

NTHR & THRM

Together NTHR (and PTHR) and THRM allow the threshold to be set. The threshold should be set as high as possible to prevent false detects but should not be set so high that true touches are not detected. The Atmel QmBtn or Hawkeye software can be used to observe the signals and signal delta on touch, and used to determine the optimum threshold settings for a specific design.

The threshold will typically need setting at a lower value to accommodate noise than is evident when testing in the absence of noise. This may initially seem counter intuitive until consideration is given to the fact that heavy noise can cause undesirable detect dropouts as well as missed touch events. The threshold should be set as high as possible, but not so high that the noise causes detect dropouts while the key is still touched.

Frequency Hopping - FHM = 3 (sweep)

The immunity of QT1245-based designs to higher noise amplitude can be increased by configuring the frequency hopping with 3 different frequencies and using FHM = 2. Choosing the 3 frequencies is a process of trial and error and varies from design to design, but a considerable increase in tolerable noise amplitude can be achieved once 3 appropriate frequencies have been identified.

However, frequency hopping using sweep mode (FHM = 3) is much easier to configure and may provide sufficient immunity for many applications and products.

Associated Documents

The following documents are a good source of general information regarding design and development of Atmel touch sensors and should be studied before starting the development of a new touch interface.

- QTAN0079 – *Buttons, Sliders and Wheels Sensor Design Guide*

  Refer to this application note for details of different possible X/Y electrode designs and patterns, and the optimum geometry to match the panel thickness.
- QTAN0062 – *Qtouch and Qmatrix Sensitivity Tuning for Keys, Sliders and Wheels*
- AVR3000 *Qtouch Conducted Immunity*

  Refer to this guide for further information on immunity from conducted noise.

These documents are available on the Atmel website (www.atmel.com).

Revision History

Revision No.	History
Revision AX and BX – 2011	Initial release for customer
Revision CX – August 2011	Firmware version 1. Changes to datasheet clarifying text
Revision DX – March 2013	Firmware version 3.0
Revision EX – December 2013	Updated part marking diagram and part numbering section

Atmel | Enabling Unlimited Possibilities®

Atmel Corporation
1600 Technology Drive
San Jose, CA 95110
USA
Tel: (+1) (408) 441-0311
Fax: (+1) (408) 487-2600
www.atmel.com

Atmel Asia Limited
Unit 01-5 & 16, 19F
BEA Tower, Millennium City 5
418 Kwun Tong Roa
Kwun Tong, Kowloon
HONG KONG
Tel: (+852) 2245-6100
Fax: (+852) 2722-1369

Atmel München GmbH
Business Campus
Parkring 4
D-85748 Garching bei München
GERMANY
Tel: (+49) 89-31970-0
Fax: (+49) 89-3194621

Atmel Japan G.K.
16F Shin-Osaki Kangyo Bldg
1-6-4 Osaki, Shinagawa-ku
Tokyo 141-0032
JAPAN
Tel: (+81) (3) 6417-0300
Fax: (+81) (3) 6417-0370

© 2009 – 2013 Atmel Corporation. All rights reserved. / Rev.: 9631EX–AT42–12/13

Atmel®, Atmel logo and combinations thereof, Adjacent Key Suppression®, AKS®, and others are registered trademarks, QT™ and others are trademarks of Atmel Corporation or its subsidiaries. Windows® is a registered trademark of Microsoft Corporation in U.S. and or other countries.Other terms and product names may be registered trademarks or trademarks of others.

Disclaimer: The information in this document is provided in connection with Atmel products. No license, express or implied, by estoppel or otherwise, to any intellectual property right is granted by this document or in connection with the sale of Atmel products. EXCEPT AS SET FORTH IN THE ATMEL TERMS AND CONDITIONS OF SALES LOCATED ON THE ATMEL WEBSITE, ATMEL ASSUMES NO LIABILITY WHATSOEVER AND DISCLAIMS ANY EXPRESS, IMPLIED OR STATUTORY WARRANTY RELATING TO ITS PRODUCTS INCLUDING, BUT NOT LIMITED TO, THE IMPLIED WARRANTY OF MERCHANTABILITY, FITNESS FOR A PARTICULAR PURPOSE, OR NON-INFRINGEMENT. IN NO EVENT SHALL ATMEL BE LIABLE FOR ANY DIRECT, INDIRECT, CONSEQUENTIAL, PUNITIVE, SPECIAL OR INCIDENTAL DAMAGES (INCLUDING, WITHOUT LIMITATION, DAMAGES FOR LOSS AND PROFITS, BUSINESS INTERRUPTION, OR LOSS OF INFORMATION) ARISING OUT OF THE USE OR INABILITY TO USE THIS DOCUMENT, EVEN IF ATMEL HAS BEEN ADVISED OF THE POSSIBILITY OF SUCH DAMAGES. Atmel makes no representations or warranties with respect to the accuracy or completeness of the contents of this document and reserves the right to make changes to specifications and products descriptions at any time without notice. Atmel does not make any commitment to update the information contained herein. Unless specifically provided otherwise, Atmel products are not suitable for, and shall not be used in, automotive applications. Atmel products are not intended, authorized, or warranted for use as components in applications intended to support or sustain life.