Surface Mount Switching Diode

COMCHIP
www.comchip.com.tw

BAV99 Thru BAW56

Voltage: 70 Volts
Current: 215mA



Features

Fast Switching Speed

Surface Mount Package Ideally Suited for Automatic Insertio

For General Purpose Switching Applications

High Conductance

Mechanical data

Case: SOT-23, Plastic

Approx. Weight: 0.008 gram

This diodes is also available in other configurations including a dual common cathode with type designation BAV70, a dual common anodes with type designation BAW56 and single chip inside with type Designation BAL99

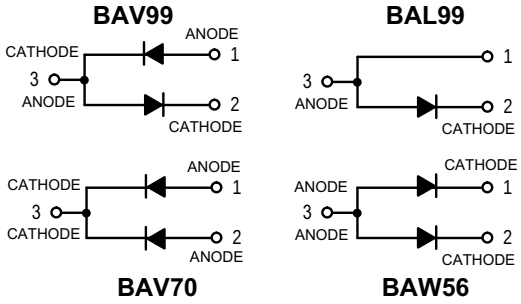

SOT-23

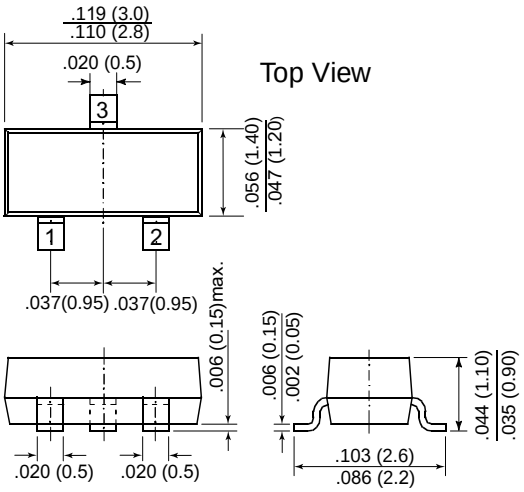

Dimensions in inches (millimeters)

Maximum Ratings

Rating	Symbol	Value	Units
Continuous Reverse Voltage	V_R	70	V_{DC}
Peak Forward Current	I_F	215	mAdc
Peak Forward Surge Current	I_{FM}(surge)	500	mAdc

Thermal Characteristics

Characteristic	Symbol	Max	Units
Total Device Dissipation FR– 5 Board(1) T_A = 25°C	P_D	225	mW
Derate above 25°C		1.8	mW/°C
Thermal Resistance, Junction to Ambient	$R_{\theta JA}$	556	°C/W
Total Device Dissipation Alumina Substrate,(2) T_A = 25°C	P_D	300	mW
Derate above 25°C		2.4	mW/°C
Thermal Resistance, Junction to Ambient	$R_{\theta JA}$	417	°C/W
Junction and Storage Temperature	T_J, T_{stg}	–55 to +150	°C

Electrical Characterics (TA = 25°C unless otherwise noted)

Characteristic (OFF CHARACTERISTICS)	Symbol	Min	Max	Units
Reverse Breakdown Voltage ($I_{(BR)}$ = 100 uAdc)	$V_{(BR)}$	70	-	Vdc
Reverse Voltage Leakage Current V_R = 25 Vdc, T_J = 150°C	I_R	-	30	uAdc
V_R = 70 Vdc		-	2.5	
V_R = 70 Vdc, T_J = 150°C		-	50	
Diode Capacitance (V_R = 0, f = 1.0 MHz))	C_D		1.5	pF
Forward Voltage I_F = 1.0 mAdc	VF	-	715	mV
I_F = 10 mAdc		-	855	
I_F = 50 mAdc		-	1000	
I_F = 150 mAdc		-	1250	
Reverse Recovery Time (I_F = I_R = 10 mAdc, $I_{R(REC)}$ = 1.0mAdc) R_L = 100Ω	Trr		6.0	nS

1.FR–5 = 1.0 X 0.75X 0.062 in. 2.Aluminum = 0.4X 0.3X 0.024 in. 99.5% aluminum.

RATING AND CHARACTERISTIC CURVES (BAV99 Thru BAW56)

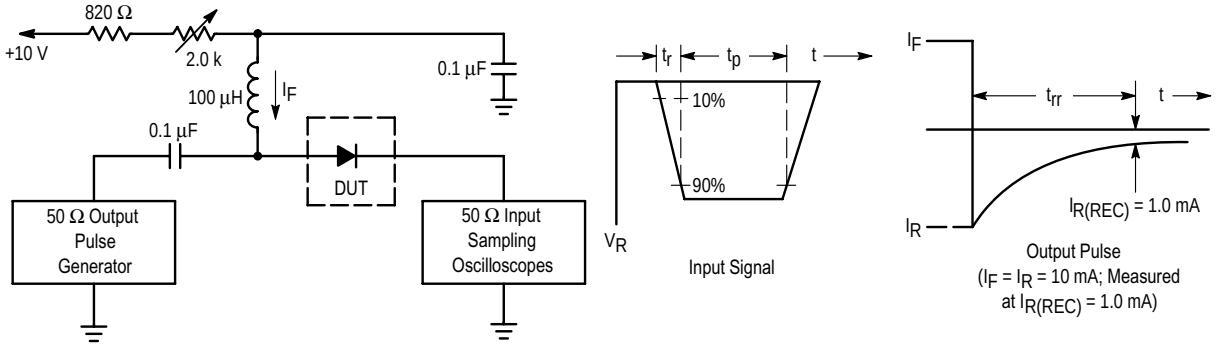

Notes: 1. A 2.0 kΩ variable resistor adjusted for a Forward Current (I_F) of 10 mA.
2. Input pulse is adjusted so $I_{R(peak)}$ is equal to 10 mA.
3. $t_p \gg t_{rr}$

Figure 1. Recovery Time Equivalent Test Circuit

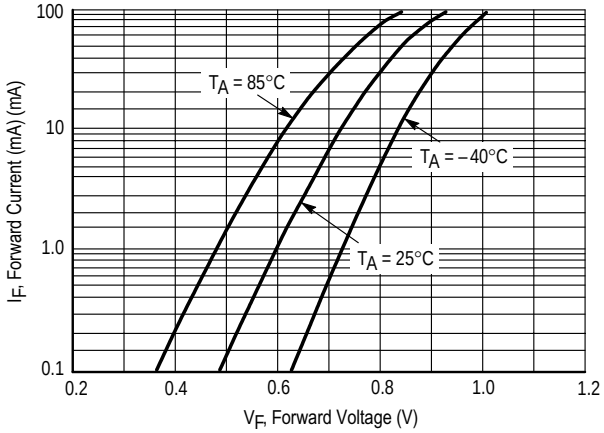

Figure 2. Forward Voltage

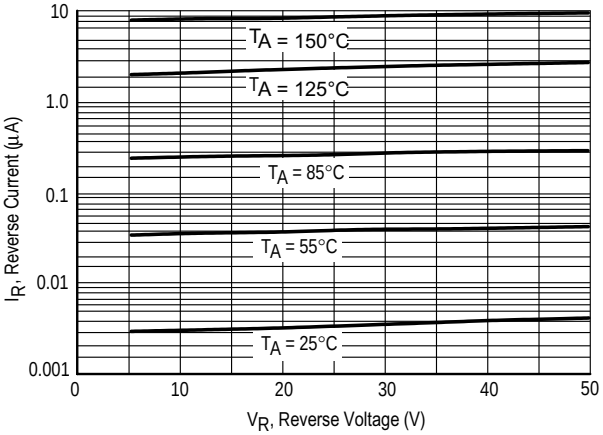

Figure 3. Leakage Current

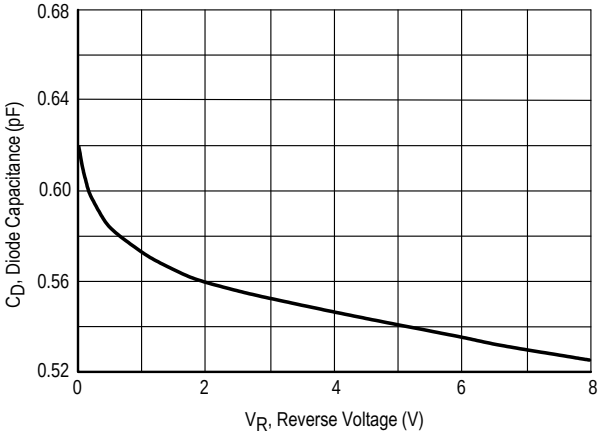

Figure 4. Capacitance