BB
RANGE

brainboxes
www.brainboxes.com

BB-400 NeuronEdge

Smart Controller for Industry 4

- Multiple connections within compact DIN mount design
- Comes with easy to use web interface
- Edge Processing with innovative industrialised Raspberry Pi
- Develop on Pi and deploy seamlessly to Industry



Sense, sort and send your machine data

Minimize downtime, speed up response times and maximise profits.



- 8 Digital IO lines
- Works with common 0-30V sensors
- 1 Ethernet port for wider network
- 1 Ethernet port for LAN network
- Extendible Wi-Fi antenna
- Bluetooth - for wireless sensors
- UPS power management - prevents corruption
- Dual redundant 5-30 VDC power supply
- Raspberry Pi Compute 3+ module and Arduino processing power
- Edge processing sends relevant data to your application or the cloud
- Highly compatible open source software
- Customise with APIs and Docker containers, REST, Websockets, or .NET APIs
- Program in your favourite language or use out-of-the-box applications

POWERED BY Raspberry Pi

ARDUINO AT HEART

{ REST }

docker

UK +44 (0)151 220 2500 // USA +1 855 958 2502
www.brainboxes.com // sales@brainboxes.com

UK +44 (0)151 220 2500 // USA +1 855 958 2502
www.brainboxes.com // sales@brainboxes.com

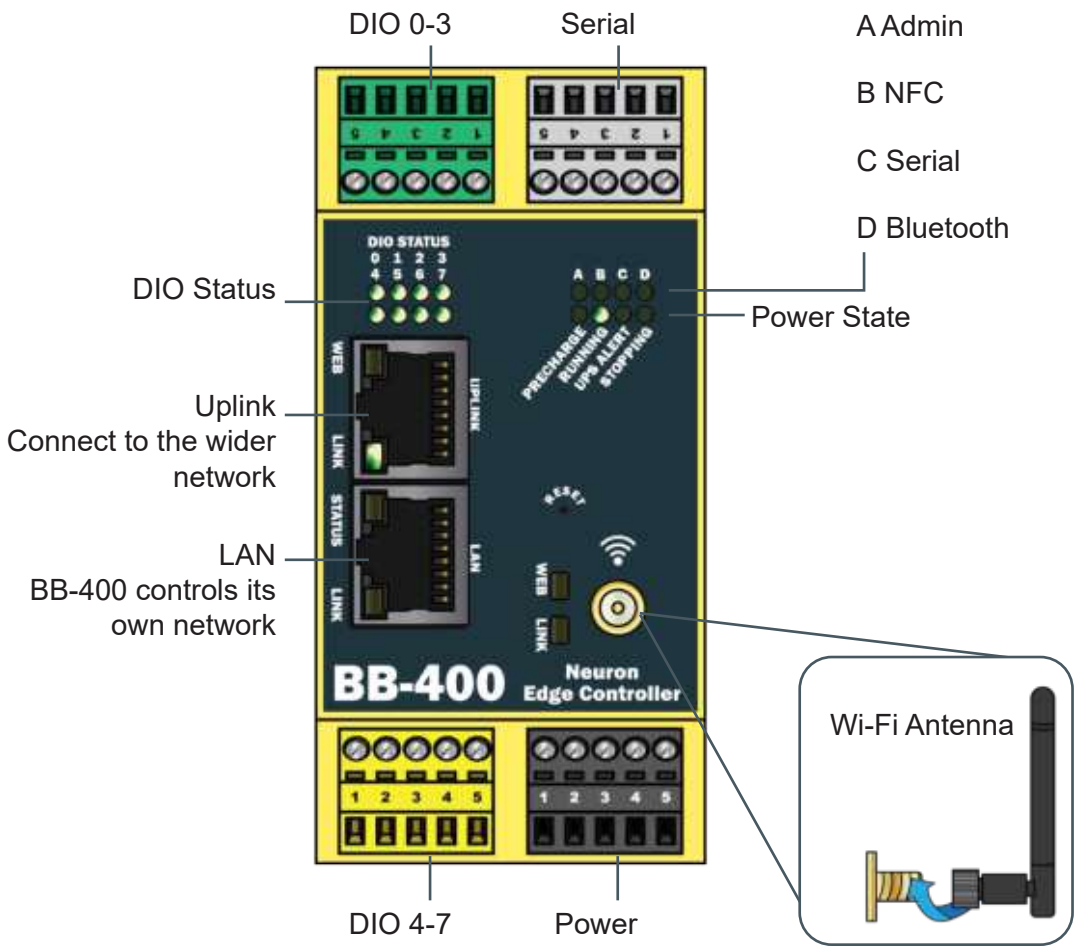

LED States	Solid Green	Flashing
Uplink Web	Has internet connection	Checking for internet connection
Uplink Link	Connected	Data
LAN Status	100 Mbps link	
LAN Link	Connected	Data
Wi-Fi Web	Has internet connection	Checking for internet connection
Wi-Fi Link	Connected	Scanning for Wi-Fi
DIO 0-8	User configurable on/off/flashing - default	on when line high, off when line low
A - Admin	Active session	
B - NFC	Available	Data
C - Serial Port	Open	
D - Bluetooth	Available	
Pre-charge	Charging Backup supply	
Running	Device is ready	
UPS Alert	External power loss detected - device using Backup power	
Stopping	Power loss unresolved - clean shutdown initiated	

UK +44 (0)151 220 2500 // USA +1 855 958 2502
www.brainboxes.com // sales@brainboxes.com

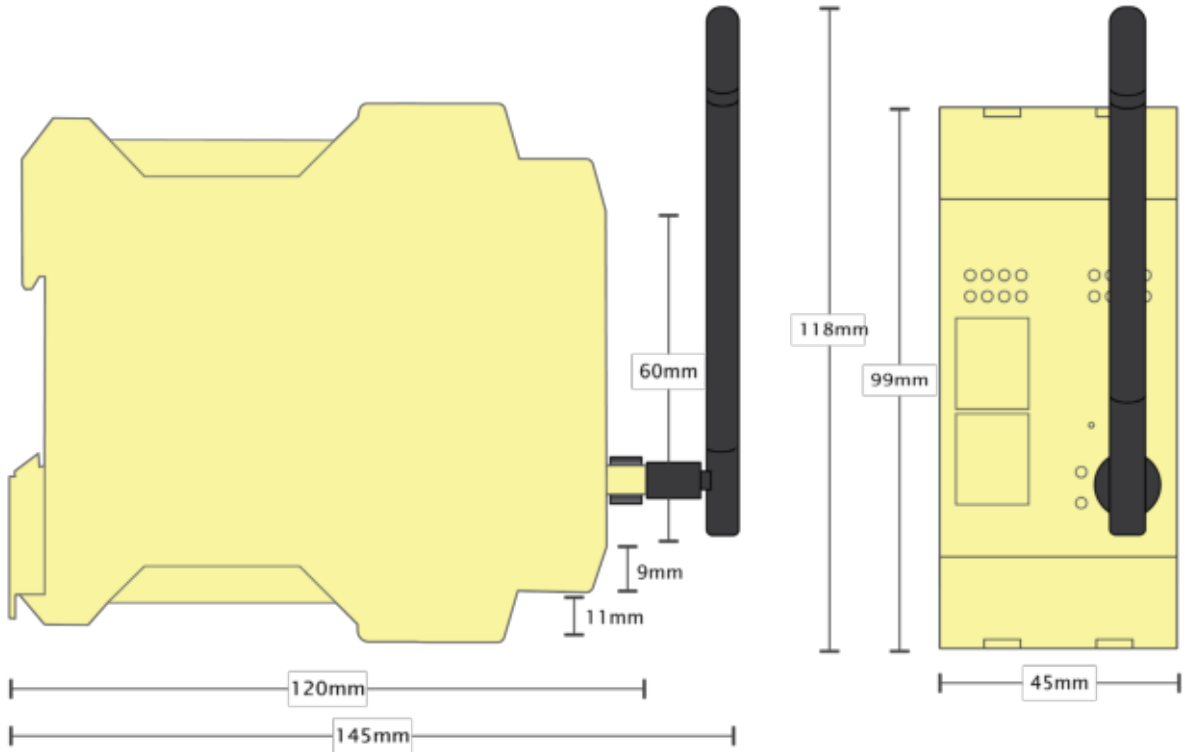

Terminal Block Pin Outs

Terminal Block	Pin 1	Pin 2	Pin 3	Pin 4	Pin 5
Green	-V	DIO 0	DIO 1	DIO 2	DIO 3
Yellow	-V	DIO 4	DIO 5	DIO 6	DIO 7
Grey - RS232	Sig GND	CTS	RxD	RTS	TxD
Grey - RS422/485 FD	Sig GND	RxD-	RxD+	TxD+	TxD-
Grey - RS485 HD	Sig GND			Data+	Data-
Black	-V	+V A	+V B	-V	Func GND
Power Input	+5V to +30V DC 15W Max				

Ethernet Port Pin Outs

PIN	FUNCTION
1	RD+ / TD+
2	RD- / TD-
3	TD+ / RD+
4	NC
5	NC
6	TD- / RD-
7	NC
8	NC

Housing	IP-20 rated non-conducting polyamide casing UL94 v-0 certified
Connectors	Removable, colour-coded and numbered 5 pin terminal blocks
Screw Terminals	3.5mm pitch
Wire Thickness Power Terminal	0.5 - 2.5 mm^2, #22 - #14 AWG
Wire Thickness	0.14 - 1.3 mm^2, #26 - #16 AWG
Environmental	
Operating Temperature	-25ºC to +80ºC/-13ºF to +176ºF
Storage Temperature	-40ºC to +80ºC/-40ºF to +176ºF
Ambient Relative Humidity	5 to 95% (non-condensing)
Heat Sink	Increases the achievable processing performance. Draws heat away from the Pi allowing high processor operating loads for longer www.brainboxes.com/bb-400/heatsink

UK +44 (0)151 220 2500 // USA +1 855 958 2502
www.brainboxes.com // sales@brainboxes.com

Power Supply	
Power Consumption	4 Watts typical, 15W Max dependent on application
Power Supply input	+5V to +30V DC, Dual Power Inputs, reverse polarity protected
Max Input	35V
Isolation	1500VRMS Magnetic isolation from Ethernet
UPS	When power is interrupted the system switches to an internal backup supply for a limited time before activating a controlled shutdown (time is application dependent).

Connectivity	
Ethernet Uplink Port	1x RJ45 jack, 10/100Mbps autosensing, crossover autosensing (Auto MDIX)
Ethernet LAN Port	1x RJ45 jack, 10/100Mbps autosensing, crossover autosensing (Auto MDIX)
Protection	1500V Magnetic Isolation between ports and network
Wi-Fi	802.11 b/g/n
	Detachable Antenna; can be used with extender cable (not included)
Bluetooth	4.0 (2.1+EDR, LE)
Bluetooth Class	Class 1
Operating Frequency	2402MHz – 2480MHz
NFC	Coming soon via software update
Real Time Clock	Yes, with battery backup; takes CR1220 3v lithium battery (not included)

Edge Processing	
Processor	Raspberry Pi Compute Module 3+, 1.2GHz quad-core Broadcom BCM2837B0, Cortex-A53 (ARMv8) 64-bit
RAM	1 Gbyte LPDDR2 RAM
Storage	32GB eMMC Flash memory
Operating System	Raspbian Lite - based on Debian Linux - latest kernel and OS version
Security	Latest SSH and TLS security protocols
Administration	Secure Web administration with user definable roles
Docker Support	Pre-installed with web admin interface, Customised Containers available for Node-RED
Configurability	Full access to secure linux command line, open system, fully configurable, custom OS can be flashed into memory if required
OS Compatibility	Discoverable in Windows using network tab
	Communicate with Device over TCP from any OS
	Suitable for any device with a Web Browser
	Raspberry Pi
	Android
	Linux

POWERED BY Raspberry Pi

Raspbian

Linux

UK +44 (0)151 220 2500 // USA +1 855 958 2502
www.brainboxes.com // sales@brainboxes.com

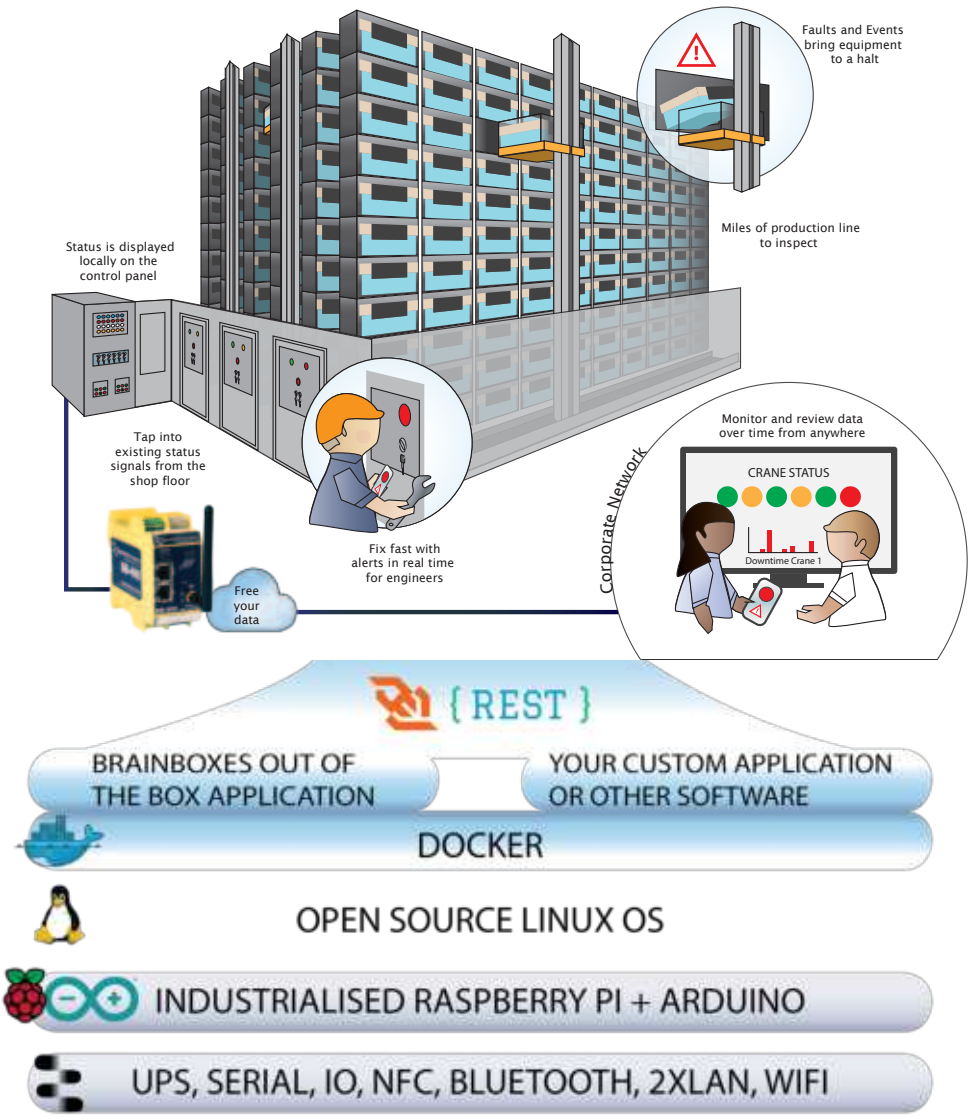

Device administration	
Administration interface	1. Secure web administration over port 9090 2. SSH using user name and passwords or SSH keys 3. USB mount the memory of the device over USB to a PC
Custom code	Multiple FAQs about writing and deploying code to the BB-400 are available on our website. Sample code is available in the following languages; .NET C#, Python, Node.js, Node-RED (visual coding interface). Code can be deployed either by locally using secure copy (SCP) or globally by creating a Docker container.
CLI	A simple uniform interface to configure Linux system properties. Settings are stored into a yaml file which allows 1 configuration to be deployed across a fleet of devices. Brainboxes can manufacture and pre-configure BB-400 using your BB CLI yaml configuration file settings.
Docker docker	Is a global repository for Linux applications. Docker provides these applications in “containers” that can be downloaded through the web interface on the BB-400. Brainboxes provide a number of pre-built containers and Docker’s open source community allows you to use and contribute to even more. Each container runs like a mini virtual machine holding an application in isolation from its environment. Docker provides a good method for automatically updating containers on multiple devices in the field. www.brainboxes.com/bb-400/docker

UK +44 (0)151 220 2500 // USA +1 855 958 2502
www.brainboxes.com // sales@brainboxes.com

Digital Channels - 8 Ports individually selectable as Inputs or Outputs	
Inputs	User programmable counts positive or negative transitions up to 200Hz
NPN/PNP	Jumper selectable pull up for NPN, active low, type sensors and pull down for PNP, active high, type sensors
Logic Level 0:	0V to +1V
Logic Level 1:	+2V to +30V
Latched Inputs:	Triggered by user programmable positive or negative edges, stays true until acknowledged
Outputs	Default is low = off
Max output current	1 channel driven: Sinks up to 0.85 Amp max Max combined load 4 Amps per BB device
Characteristic:	Open drain output, protected MosFET intelligent short circuit protection up to 36V
Max output load Voltage	30V
ESD Production	16kV
IO processing	Arduino processing real time signals
IO Protocols	DCON ASCII (over TCP or Virtual COM port), REST, WebSocket

ARDUINO AT HEART

The digital I/O lines run on an Arduino compatible microcontroller, giving you access to the vast library of Arduino I/O functionality. Our Arduino code is open and editable.

IO protocols			
WebSocket, ASCII TCP, REST, ASCII over Serial	Allow communication with the BB-400 to get and set values of IO lines over the local network or from the device itself. This is different to protocols that send data up to the cloud.		
	ASCII	REST	WebSocket
Max number of commands/ sec	400	150	350
Average response time (for 1 user)	2.7 ms	11 ms	2.5 ms
Max Number of simultaneous connections	200	n/a	10
Cloud Connectivity	Brainboxes are developing support for the following cloud platforms…. Amazon Web Services, Azure, Google cloud platform, IBM Watson Soon you will able to stream data to these services simply by entering your credentials. You have the option to write and deploy your own connection to the cloud platform of your choice.		

UK +44 (0)151 220 2500 // USA +1 855 958 2502
www.brainboxes.com // sales@brainboxes.com

Serial Port	
Ports	1x RS232, RS422/485 Full Duplex, or RS485 Half Duplex Software Selectable
Baud Rate	Any custom Baud rate between 300 - 921,600 Baud can be selected
Tx FIFO Size	64
Rx FIFO Size	64
Data Bits	5,6,7 or 8 (1 stop bit)
Parity	Odd, Even, None
Stop Bits	1, 1.5 or 2
Flow Control	RTS/CTS, XON/XOFF
Operating Distance	RS422/485 Standard (4000 ft : 1200 metres) / EIA - RS232 Standard
Software	Manage Serial connections through the web admin interface. Alternatively use a program like Node-RED, or any programming language like python, C#, and bash. Code examples are available on our website.
Connect	Connect to weigh scales, PLCs, CNC machines, vibration sensors, barcode scanners, printers, scientific and medical equipment using the ubiquitous Serial port. Integrate a host of traditionally stand alone or legacy equipment into your networked smart factory.

USB Port	
Ports	1x USB 2.0 Micro AB Enclosed USB port for developer use. The BB-400 is a USB host, much like a regular computer. For example, files can be copied to and from a memory stick by logging in and using Linux commands to mount the memory stick as a drive inside the Pi. It is also possible to set the BB-400 to ‘Flash’ mode, by changing the jumper. Note this is only recommended in specific applications as doing so will reformat the device and wipe the Pi’s image.

BB
RANGE

brainboxes
www.brainboxes.com

sales@brainboxes.com

Packaging Information	
Packaging	Quick Start Guide
Device	BB-400 + Antenna
Packaged Weight	0.334 kg, 11.78 ounces
Packaged Dims	160x135x49 mm, 6.3x5.3x1.9 inches
GTIN Universal Code	837324004441
Approvals	
Industry Approvals	Microsoft Certified Gold Partner, WEEE, RoHS, AEO (C-TPAT), CE, UKCA
Product Support	
Warranty	Lifetime - online registration required
Support	Lifetime Web, Email and Phone Support from fully qualified, friendly staff who work in and alongside the Product Development Team
Additional Information	
Made In	Manufactured in the UK by Brainboxes
Customisable	Brainboxes operate a 'Perfect Fit Custom Design' policy for volume users. More info:sales@brainboxes.com

Raspberry Pi is a trademark of the Raspberry Pi Foundation.

Optional Accessories:



PW-400
12VDC power supply with connectors for UK, USA, EU and AUS mains socket. 'Tails' are suitable for connecting to screw terminal blocks.



MK-588
6 coloured PCB connectors. Individually numbered pins; 5 x 3.5mm pitch screw connections with tension sleeve.

brainboxes
www.brainboxes.com

GB AEOF 00031/11

Brainboxes Limited

18 Hurricane Drive,
Liverpool International
Business Park, Speke,
Liverpool, Merseyside,
L24 8RL,
United Kingdom

Brainboxes LLC

4500 140th Avenue North
Suite 101,
Clearwater
FL 33762,
USA

sales@brainboxes.com
support@brainboxes.com
UK & EU: +44 (0)151 220 2500
USA Toll free: +1 855 958 2502