Regular (ATO/ATC Style) Blade Fuse Block

BLR-I-301

Mechanical Dimensions: Inches [mm]

Tolerances ±0.012 [0.3] Unless Otherwise Specified

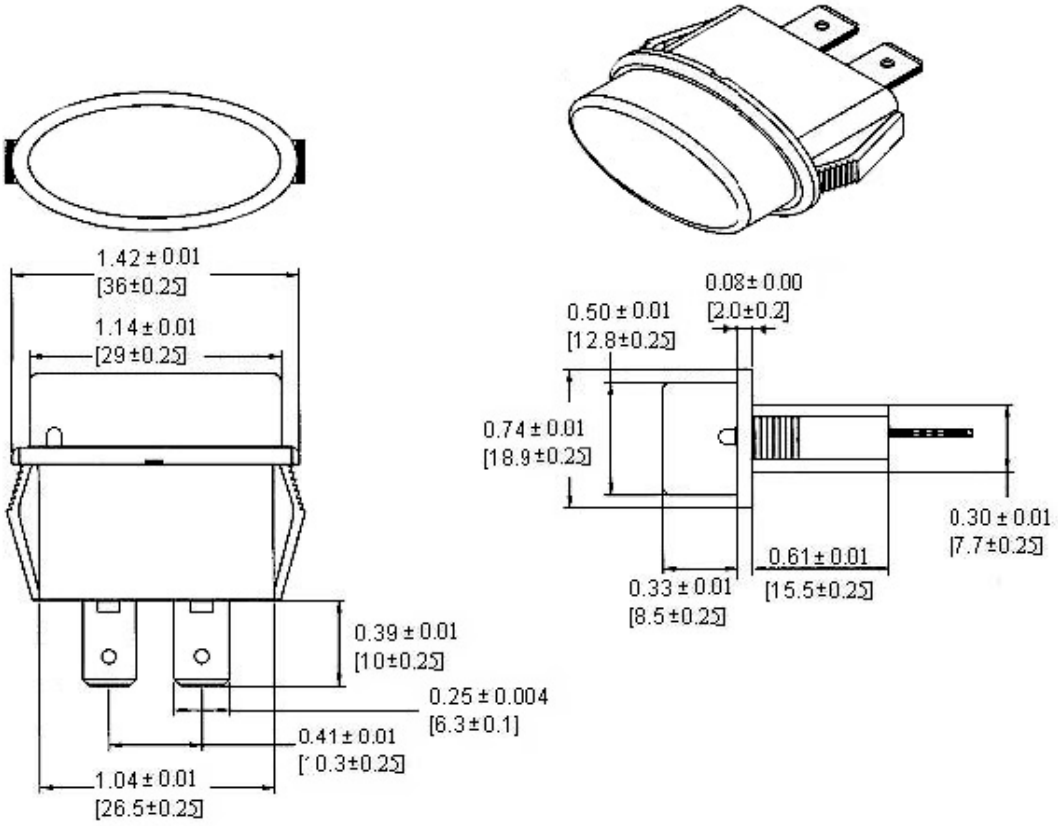

Mounting Hole

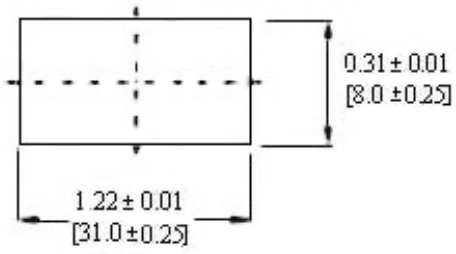

Thickness: IN[mm]max

Electrical Specifications

Rating	30A @24VDC
Contact Resistance	-20°C ~85°C

Material Specifications

LED Indication of a Blown Fuse	
Body Material	Nylon (UL Flame: 94V-2)
Cap Material	Polycarbonate (UL Flame: 94V-2)
Terminal Material	Brass, Tin-Plated
Terminal Type	0.250” (6.4mm) Quick Connect
Panel Thickness	0.5~7.0mm
Mounting	Snap-in

Regular (ATO/ATC Style) Blade Fuse Block

BLR-I-301

OPTIFUSE

Rev	Date of issue	Revision Notes	Designed	Approved
C	07-21-2025	Initial Drawing	RC	OF