DATASHEET ISM / LORA / LPWAN ANTENNAS

Black, Optimized Welded Yagi Antennas, No Tune

ISM/LoRa/LPWAN Antennas – Yagi

BMOY Series

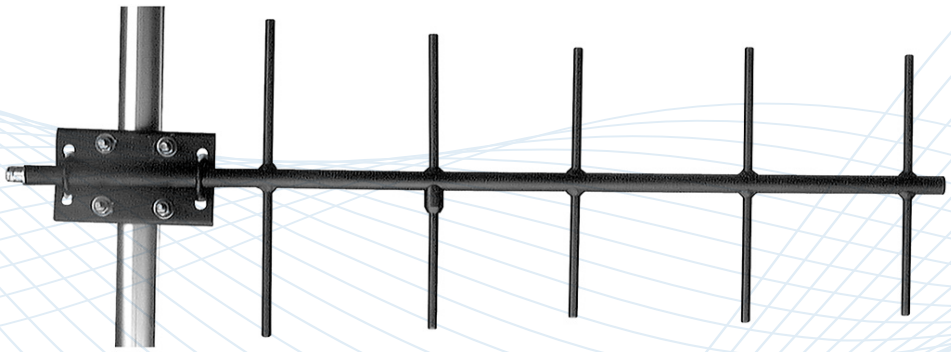

Description

Optimal performance and durability across all 400/900 MHz and UHF frequency bands

Technologies

- VFH
- UHF

Features

- Covers all 800/900 MHz frequencies with no tuning required
- 360° welds at element and boom interface protect against moisture
- Heavy-duty, robust materials
- Horizontal or vertical polarization
- DC grounded

PCTEL

BWC1001 Mount

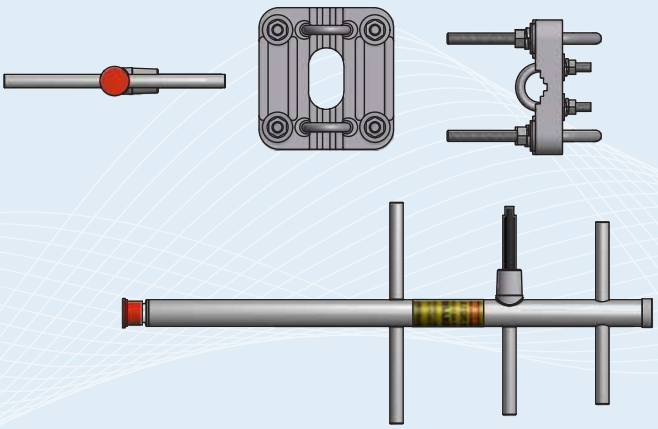

BMOY8903



BWC1001 Mount

Black, Optimized Welded Yagi Antennas, No Tune

ISM/LoRa/LPWAN Antennas – Yagi

PCTEL's BMOY yagis have been optimized using a genetic algorithm to achieve superior performance over the entire 800/900 MHz and UHF frequency bands. These antennas feature solid 3/8" elements attached to a seamless aluminum boom with 360° welds, and are finished with a black polyester powder coating. Each antenna has a type N termination located at the end of the boom, with a fully sealed driven element for complete protection against humidity, acid rain, or salt spray. A solid aluminum mounting bracket allows for either vertical or horizontal polarization. The BMOY's sturdy construction and advanced engineering design provides outstanding durability and superior performance in all weather conditions.

Features

- Broadband performance covering all 800/900 MHz frequencies and no tuning required. Provides optimal performance, minimizes inventory requirements, and reduces installation time.
- 360° welds at element and boom interface provide complete protection of the antenna's internal mechanism against moisture.
- Solid aluminum mounting clamps with stainless steel hardware. Ensures a robust installation and allows the antenna to be mounted for horizontal or vertical polarization.
- End-fed type N connector. Makes connector accessible for easier installations and protects the electrical connection from moisture and other extreme weather influences.
- Fully enclosed low loss feed system. No exposed gamma match to corrode or deteriorate. Black polyester powder-coated finish povides an added layer of protection, maximizing performance and durability under the toughest weather conditions.
- DC grounded

Certifications

RoHS COMPLIANT

SPECIFICATIONS

Black, Optimized Welded Yagi Antennas, No Tune

ISM/LoRa/LPWAN Antennas – Yagi

Standard Configuration

Model	Cables	Connector	Elements	Mount
BMOY4066	Mating cable assembly sold separately (all models)	N Female	6	BWC1001 Clamp bracket for 1/2"-7/8" diameter yagis. Mounts to masts 1.25"-2.4" OD (included with all models)
BMOY4405			5	
BMOY4705			5	
BMOY8903			5	
BMOY8905			3	
BMOY9006			6	

Electrical Specifications - RF Antenna

Model	Frequency Range	Gain	Bandwidth @ 1.5:1 VSWR	Azimuth Half Power Beamwidth	Elevation Half Power Beamwidth	Front to Back Ratio	Maximum Power	Nominal Impedance
BMOY4066	406-430 MHz	10.0 dBd	24 MHz	50°	45°	> 12 dB	150 watts	50 ohms
BMOY4405	440-480 MHz	9.0 dBd	40 MHz	52°	45°	> 15 dB		
BMOY4705	470-512 MHz	9.0 dBd	42 MHz	52°	45°	> 15 dB		
BMOY8903	890-960 MHz	9.0 dBd	70 MHz	52°	45°	> 15 dB		
BMOY8905	890-960 MHz	9.0 dBd	70 MHz	100°	54°	> 20 dB		
BMOY9006	890-960 MHz	10.0 dBd	70 MHz	50°	45°	> 15 dB		

Mechanical Specifications

Model	Boom Dimensions Length	Diameter	Weight	Radiator Material	Bending Moment @ 125 mph Wind	Lateral Thrust @ 125 mph Wind	Equivalent Flat Plate Area
BMOY4066	40"	.75"	2.2 lbs (1.0 kg)	3/8" solid 6061-T6 aluminum	45.6 ft-lbs	24.2 lbs	.37 sq ft
BMOY4405	34"	.75"	2 lbs (0.91 kg)		32.4 ft-lbs	24.2 lbs	.31 sq ft
BMOY4705	34"	.75"	2 lbs (0.91 kg)		9.5 ft-lbs	12.6 lbs	.16 sq ft
BMOY8903	14"	.75"	0.7 lbs (0.32 kg)		3.9 ft-lbs	7.9 lbs	.10 sq ft
BMOY8905	20.5"	.75"	0.9 lbs (0.41 kg)		9.5 ft-lbs	12.6 lbs	.16 sq ft
BMOY9006	23.6"	.75"	1.1 lbs (0.5 kg)		9.5 ft-lbs	12.6 lbs	.16 sq ft

Environmental Specifications

Model	Wind Load Rating	ESD Protection
BMOY4066	Wind survival: 200 mph with no ice. It will survive up to 110 mph with 0.5" radial ice build-up.	DC grounded
BMOY4405		
BMOY4705		
BMOY8903		
BMOY8905		
BMOY9006		

CONTACT US

For more information about this product contact your sales representative or visit

> pctel.com/antenna-products

Solving Complex Wireless Challenges

PCTEL is a leading global provider of wireless technology solutions, including purpose-built Industrial IoT devices, antenna systems, and test and measurement products. Trusted by our customers for over 25 years, we solve complex wireless challenges to help organizations stay connected, transform, and grow.

PCTEL, Inc.

T: +1 630 372 6800 | pctel.com

Specifications subject to change without notice. PCTEL® is a registered trademark of PCTEL, Inc. ©2022 PCTEL, Inc. All rights reserved. (October 2022)