100VAC Input/–5VDC (200mA) Output

Non-Isolated AC/DC Converter with Built-In Zero Cross Signal Output

BP5011

Not Recommended for New Designs

● Absolute Maximum Ratings

Parameter	Symbol	Limits	Unit
Input voltage	Vi	–170	V
Zero-cross input voltage	V1,V2	120	Vrms
Operating temperature range	Topr	–20 to +85	°C
Storage temperature range	Tstg	–25 to +105	°C
Maximum surface temperature	Tsmax	105	°C
Maximum output current	Io	200	mA

● Electrical Characteristics

(Unless otherwise noted, Ta=25°C,Vi= –141V, Io=100mA)

Parameter	Symbol	Min.	Typ.	Max.	Unit	Conditions
Input voltage range	Vi	–85	–141	–170	V	DC
Output voltage	Vo	–4.7	–5.0	–5.3	V	–
Output current	Io	–	–	200	mA	– *1
Line regulation	Vr	–	0.01	0.15	V	Vi= –85 to –170V
Load regulation	Vl	–	0.01	0.15	V	Io=0 to 200mA
Output ripple voltage	Vp	–	0.06	0.15	Vp-p	Io=200mA *2
Power conversion efficiency	η	60	68	–	%	Io=200mA
Zero-cross signal H	VzH	0	–	–0.3	V	V1, V2=2.3V, Rz1, 2=4kΩ
Zero-cross signal L	VzL	–4.4	–5.0	–5.3	V	V1, V2= –5.3V, Rz1, 2=4kΩ

*1 Max output current should be reduced according to the surrounding temperature.
*2 Spike noise is not included in output ripple voltage.

● Application Circuit

Pin No.	Function
1	Zero-cross signal output2(Vz2)
2	Zero-crosssignal output1 (Vz1)
3	Output (Vo)
4	Common
5	Coil 1 (Coil-1)
6	Skip
7	Coil 2 (Coil-2)
8	Skip
9	Input (Vi)
10	Skip
11	Zero-cross input2 (ACin2)
12	Skip
13	Zero-cross input1 (ACin1)

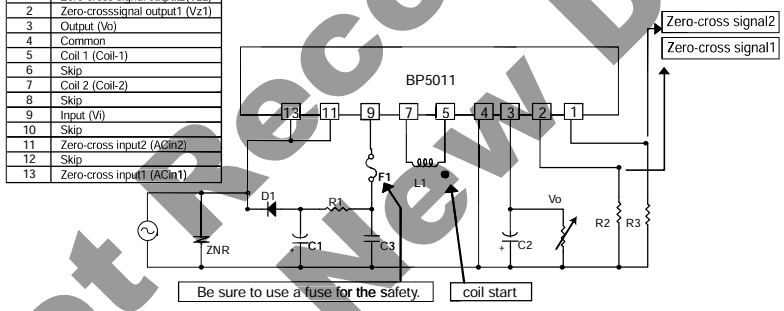

Please verify operation and characteristics in the customer's circuit before actual usage.
Ensure that the load current does not exceed the maximum rating.

External Component Specifications

F1: FUSE	Use a fast-acting fuse of 1.0A.
C1: Input capacitor	Rated voltage : 250V or higher Capacitance : 22 to 100μF
C2: Output capacitor	Rated voltage : 10V or higher Capacitance : 100 to 470μF, Low impedance type ESR : Less than 0.16Ω Rated ripple current : Beyond 0.58Arms Evaluate under actual operating conditions since it affects the output ripple voltage.
C3: Noise removal capacitor	Rated voltage : 250V or higher Capacitance : 0.1 to 0.22μF Film or ceramic capacitor
L1: Power inductor	Inductance : 560μH Rated current : More than 0.52A
R1: Noise removal resistor	Resistance : 10 to 22Ω Power : More than 1/4W
R2,R3 : Pull-up resistor	Pull-up resistor for zero-cross signal. 4kΩ 1/10W
D1: Rectifier diode	Peak reverse voltage : More than 400V Mean rectifying current : More than 1.0A Peak forword surge current : More than 20A Full-wave rectification can be used.
ZNR : Varistor	A varistor is required to protect against lightning surges and static electricity.

● Dimensions (Unit : mm)

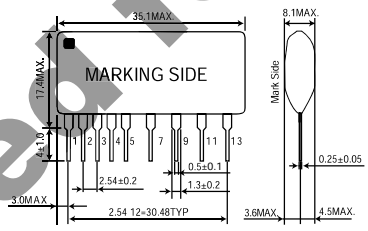

● Derating Curve

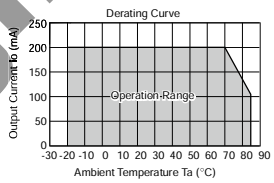

● Conversion Efficiency

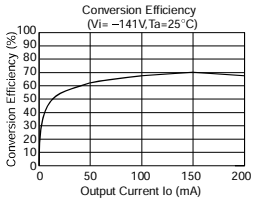

● Load Regulation

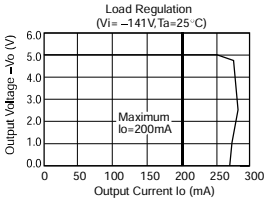

©2010 ROHM Co., Ltd. All rights reserved.

Power Module Usage Precautions

Safety Precautions

1) The products are designed and manufactured for use in ordinary electronic equipment (i.e. AV/OA/ telecommunication/amusement equipment, home appliances). Please consult with the Company's (ROHM) sales staff if intended for use in devices requiring high reliability (e.g. medical/transport/ aircraft/spacecraft equipment, nuclear power/fuel controllers, automotive/safety devices) and whose malfunction may result in injury or death. In this case, failsafe measures must be taken, including the following:
   [a] Installation of protection circuits in order to improve system safety
   [b] Incorporation of redundant circuits in the case of single-circuit failure
2) The products are designed for use under normal conditions. Application in special environments can cause a deterioration in product performance. Therefore, verification and confirmation of product performance, prior to use, is recommended. The following environments are considered to be 'special':
   [a] Outdoors, exposed to direct sunlight or dust
   [b] In contact with liquids, such as water, oils, chemicals, or organic solvents
   [c] In areas where exposure to the sea air or corrosive gases (i.e. Cl_2, H_2S, NH_3, SO_2, NO_2) can occur
   [d] In places where the products may be in contact with static electricity or electromagnetic waves
   [e] In proximity to heat-producing items, plastic cords, or flammable materials
   [f] In contact with sealing or coating products, such as resin
   [g] In contact with unclean solder or exposed to water or water-soluble cleaning agents used after soldering
   [h] In areas where dew condensation occurs
3) The products are not designed to be radiation resistant
4) The Company is not responsible for any problems resulting from use of the products under conditions not recommended herein.
5) The Company should be notified of any product safety issues. Moreover, product safety issues should be periodically monitored by the customer.

Not Recommended for New Designs

Application Notes

1) A sufficient margin must be allowed if changes are made to the peripheral circuit due to variations in the inherent tolerances of the external components as well as transient and static characteristics. In addition, please be aware that the Company has not conducted investigations on whether or not particular changes in the example application circuits would result in patent infringement.
2) The application examples, their constants, and other types of information contained herein are applicable only when the products are used in accordance with standard methods.
   Therefore, if mass production is intended, sufficient consideration to external conditions must be made.

Notes Regarding Industrial Property

1) The specifications included herein contain information related to the Company's industrial property. Their use other than pertaining to the relevant products is forbidden. Duplication and/or disclosure to a third party without express written permission is strictly prohibited.
2) Product information and data, including application examples, contained in the specifications are for reference purposes only; the Company does not guarantee the industrial/intellectual property rights or any other rights of a third party. Accordingly, the Company shall not bear responsibility for:
   [a] Infringement of the intellectual property rights of a third party
   [b] Problems arising from the use of the products listed herein
3) The Company prohibits the purchaser from exercising or using the intellectual/industrial property rights or any rights belonging to or are controlled by the Company, other than the right to use, sell, or dispose of the products.

Power Module Usage Precautions

Safety Precautions

1) The products are designed and manufactured for use in ordinary electronic equipment (i.e. AV/OA/ telecommunication/amusement equipment, home appliances). Please consult with the Company's (ROHM) sales staff if intended for use in devices requiring high reliability (e.g. medical/transport/ aircraft/spacecraft equipment, nuclear power/fuel controllers, automotive/safety devices) and whose malfunction may result in injury or death. In this case, failsafe measures must be taken, including the following:
   [a] Installation of protection circuits in order to improve system safety
   [b] Incorporation of redundant circuits in the case of single-circuit failure
2) The products are designed for use under normal conditions. Application in special environments can cause a deterioration in product performance. Therefore, verification and confirmation of product performance, prior to use, is recommended. The following environments are considered to be 'special':
   [a] Outdoors, exposed to direct sunlight or dust
   [b] In contact with liquids, such as water, oils, chemicals, or organic solvents
   [c] In areas where exposure to the sea air or corrosive gases (i.e. Cl_2, H_2S, NH_3, SO_2, NO_2) can occur
   [d] In places where the products may be in contact with static electricity or electromagnetic waves
   [e] In proximity to heat-producing items, plastic cords, or flammable materials
   [f] In contact with sealing or coating products, such as resin
   [g] In contact with unclean solder or exposed to water or water-soluble cleaning agents used after soldering
   [h] In areas where dew condensation occurs
3) The products are not designed to be radiation resistant
4) The Company is not responsible for any problems resulting from use of the products under conditions not recommended herein.
5) The Company should be notified of any product safety issues. Moreover, product safety issues should be periodically monitored by the customer.

Not Recommended for New Designs

Application Notes

1) A sufficient margin must be allowed if changes are made to the peripheral circuit due to variations in the inherent tolerances of the external components as well as transient and static characteristics. In addition, please be aware that the Company has not conducted investigations on whether or not particular changes in the example application circuits would result in patent infringement.
2) The application examples, their constants, and other types of information contained herein are applicable only when the products are used in accordance with standard methods.
   Therefore, if mass production is intended, sufficient consideration to external conditions must be made.

Notes Regarding Industrial Property

1) The specifications included herein contain information related to the Company's industrial property. Their use other than pertaining to the relevant products is forbidden. Duplication and/or disclosure to a third party without express written permission is strictly prohibited.
2) Product information and data, including application examples, contained in the specifications are for reference purposes only; the Company does not guarantee the industrial/intellectual property rights or any other rights of a third party. Accordingly, the Company shall not bear responsibility for:
   [a] Infringement of the intellectual property rights of a third party
   [b] Problems arising from the use of the products listed herein
3) The Company prohibits the purchaser from exercising or using the intellectual/industrial property rights or any rights belonging to or are controlled by the Company, other than the right to use, sell, or dispose of the products.

Notes

No copying or reproduction of this document, in part or in whole, is permitted without the consent of ROHM Co.,Ltd.

The content specified herein is subject to change for improvement without notice.

The content specified herein is for the purpose of introducing ROHM's products (hereinafter "Products"). If you wish to use any such Product, please be sure to refer to the specifications, which can be obtained from ROHM upon request.

Examples of application circuits, circuit constants and any other information contained herein illustrate the standard usage and operations of the Products. The peripheral conditions must be taken into account when designing circuits for mass production.

Great care was taken in ensuring the accuracy of the information specified in this document. However, should you incur any damage arising from any inaccuracy or misprint of such information, ROHM shall bear no responsibility for such damage.

The technical information specified herein is intended only to show the typical functions of and examples of application circuits for the Products. ROHM does not grant you, explicitly or implicitly, any license to use or exercise intellectual property or other rights held by ROHM and other parties. ROHM shall bear no responsibility whatsoever for any dispute arising from the use of such technical information.

The Products specified in this document are intended to be used with general-use electronic equipment or devices (such as audio visual equipment, office-automation equipment, communication devices, electronic appliances and amusement devices).

The Products specified in this document are not designed to be radiation tolerant.

While ROHM always makes efforts to enhance the quality and reliability of its Products, a Product may fail or malfunction for a variety of reasons.

Please be sure to implement in your equipment using the Products safety measures to guard against the possibility of physical injury, fire or any other damage caused in the event of the failure of any Product, such as derating, redundancy, fire control and fail-safe designs. ROHM shall bear no responsibility whatsoever for your use of any Product outside of the prescribed scope or not in accordance with the instruction manual.

The Products are not designed or manufactured to be used with any equipment, device or system which requires an extremely high level of reliability the failure or malfunction of which may result in a direct threat to human life or create a risk of human injury (such as a medical instrument, transportation equipment, aerospace machinery, nuclear-reactor controller, fuel-controller or other safety device). ROHM shall bear no responsibility in any way for use of any of the Products for the above special purposes. If a Product is intended to be used for any such special purpose, please contact a ROHM sales representative before purchasing.

If you intend to export or ship overseas any Product or technology specified herein that may be controlled under the Foreign Exchange and the Foreign Trade Law, you will be required to obtain a license or permit under the Law.

Not Recommended for New Designs

ROHM SEMICONDUCTOR

Thank you for your accessing to ROHM product informations.
More detail product informations and catalogs are available, please contact us.

ROHM Customer Support System

http://www.rohm.com/contact/

© 2010 ROHM Co., Ltd. All rights reserved.