DC / DC converter for LCDs

BP5319 / BP5319X

The BP5319 and BP5319X are DC / DC converters for supplying power to liquid crystal displays (LCDs) panels. These modules supply a negative voltage from power supply of 5V. They are available in a single in-line package as an upright (BP5319) or L-shaped lead (BP5319X) type.

● Applications

LCD panels in copiers, facsimiles, personal computers, word processors, instruments, and other displays

● Features

1) Accurate output voltage. (–24V±0.75V)
2) High conversion efficiency. (typically 75%)
3) The external resistor can change an output voltage.
4) Built-in protection circuit.
5) Built-in ON/OFF switch.
6) Compact and light.
7) Available as an upright or L-shaped lead type.

● Absolute maximum ratings (Ta=25°C)

Parameter	Symbol	Limits	Unit
Input voltage	V_{IN}	7	V
Output current	Io	30	mA
ON / OFF CTL voltage	V_{CTL}	7	V
Operating temperature range	Topr	–10~+60	°C
Storage temperature range	Tstg	–30~+85	°C

● Pin descriptions

Pin No.	Pin name	Function
1	C_O	Output smoothing capacitor connection pin; connect a low-impedance capacitor with a recommended capacitance of 47μF between this pin and GND.
2	V_{OUT}	Output pin
3	Vref	Output voltage adjustment pin for contrast; output voltages is adjusted by connecting a resistor between pins 2 and 3 or pins 3 and 4.
4, 7	GND	Ground pin; pins 4 and 7 are internal connection.
8	V_{CTL}	Output ON / OFF control pin; output starts when the pin is LOW level or OPEN, and stops when the pin HIGH level.
9	V_{IN}	Input pin; connect a low-impedance capacitor with a recommended capacitance of 100mF between this pin and GND.

● Electrical characteristics (Unless otherwise noted, Ta=25°C)

Parameter	Symbol	Min.	Typ.	Max.	Unit	Conditions
Input voltage	V_{IN}	4.5	–	5.5	V	
Output current	I_{OUT}	–	–	30	mA	
Output voltage	V_{OUT}	–24.75	–24.00	–23.25	V	V_{IN}=5V, I_{OUT}=25mA
Line regulation	ΔV1	–	–	0.24	V	V_{IN}=4.5~5.5V, I_{OUT}=25mA
Load regulation	ΔV2	–	–	0.24	V	V_{IN}=5V, I_{OUT}=0~25mA
Output voltage temperature coefficient	ΔVt	–	–10	–	mV / °C	V_{IN}=5V, I_{OUT}=25mA ∗2
Ripple noise voltage	ν1	–	–	150	mV_{PP}	V_{IN}=5V, I_{OUT}=25mA ∗1
Conversion efficiency	η	70	75	–	%	V_{IN}=5V, I_{OUT}=25mA
ON / OFF CTL voltage when OFF	V_{CTL}	2.0	–	–	V	V_{IN}=5V
ON / OFF CTL voltage when ON	V_{CTL}	– (Alternatively, when Open)	–	0.5	V	V_{IN}=5V
ON / OFF CTL input current	I_{CTL}	–	100	150	μA	V_{IN}=4.5~5.5V, V_{CTL}=5V ∗2
Current consumption when OFF	I_{OFF}	–	–	0.5	mA	V_{IN}=4.5~5.5V, V_{CTL}=5V ∗2
R1 resistance	R1	50	–	∞	kΩ	V_{IN}=4.5~5.5V, V_{CTL}=5V ∗2
R2 resistance	R2	50	–	∞	kΩ	V_{IN}=4.5~5.5V, V_{CTL}=5V ∗2

∗1 Measured with a bandwidth of 20MHz.
∗2 Ta=–10~60°C

● Measurement circuit

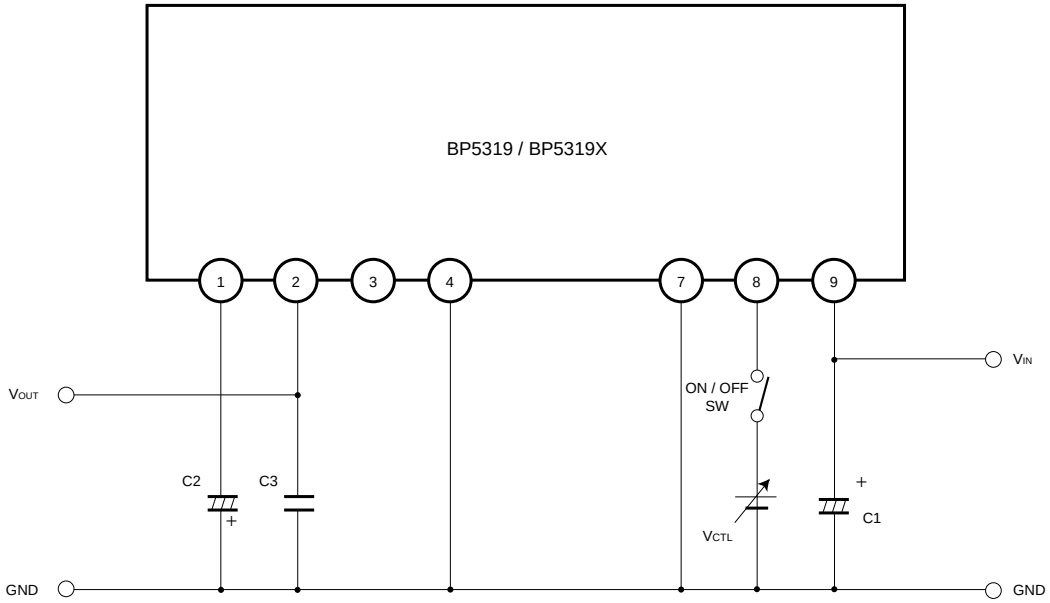

Fig.1

C1 : 100µF / 16V (Low-impedance capacitor)
C2 : 47µF / 35V (Low-impedance capacitor)
C3 : 0.022µF / 50V (Ceramic capacitor)

● Application example

(1) When increasing the output voltage
(to negative voltage side)

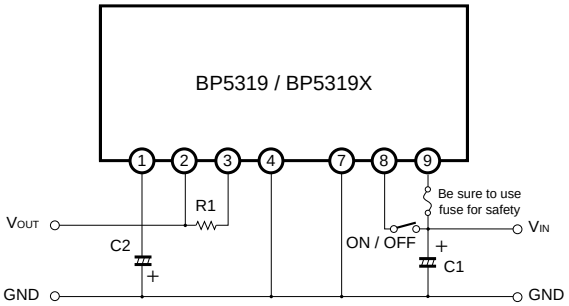

(2) When reducing the output voltage
(near to zero voltage)

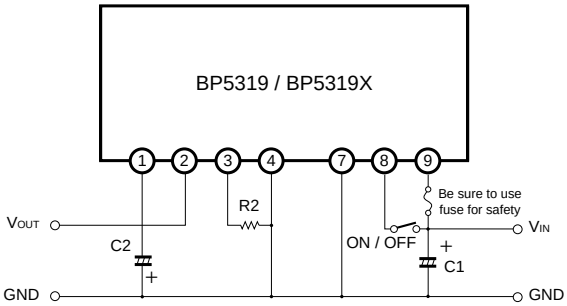

Note) Set up the change of the output voltage in the range of the territory(Fig.2) which can be used.

● Operation notes

(1) Place I/O external capacitors as near as possible to the connection pins. In particular, make sure to minimize the impedance between the input-side capacitor (C1) and pin 9. (Reference value: A length less than 50mm is recommended for a copper foil of 1.0mm wide and 35µm thick.)

(2) Avoid frequent switching using the ON / OFF CTL pin (5 times per second at the maximum).

● Electrical characteristic curves

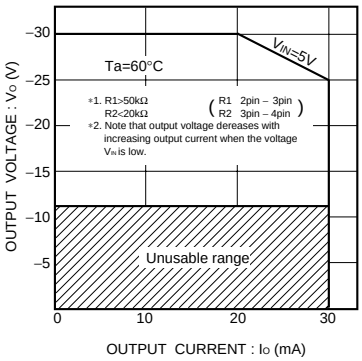

Fig.2 Usable range

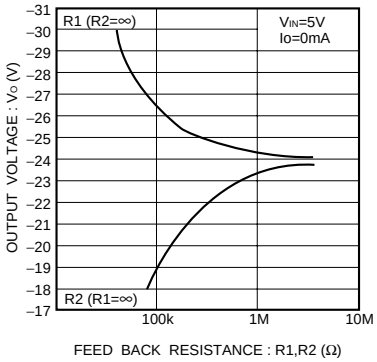

Fig.3 Output voltage vs. Feedback resistance (R1, R2)

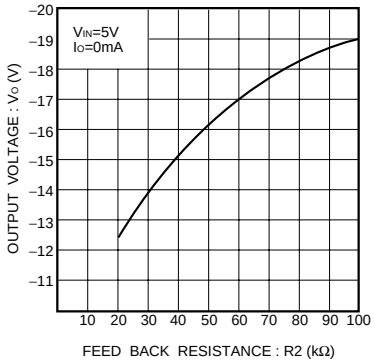

Fig.4 Output voltage vs. Feedback resistance (R2<100kW)

● External dimensions (Units : mm)

BP5319

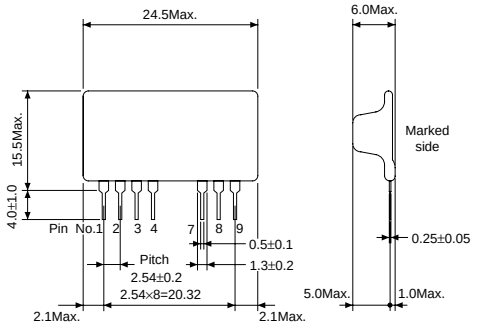

SIP9

BP5319X

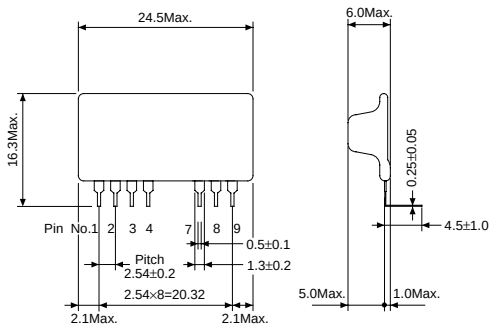

SIP9 (L forming)

Precautions on Use of ROHM Power Module

Safety Precautions

1) The products are designed and produced for application in ordinary electronic equipment (AV equipment, OA equipment, telecommunication equipment, home appliances, amusement equipment etc.).
   If the products are to be used in devices requiring extremely high reliability (medical equipment, transport equipment, aircraft/spacecraft, nuclear power controllers, fuel controllers, car equipment including car accessories, safety devices, etc.) and whose malfunction or operational error may endanger human life and sufficient fail-safe measures, please consult with the Company's sales staff in advance. If product malfunctions may result in serious damage, including that to human life, sufficient fail-safe measures must be taken, including the following:
   [a] Installation of protection circuits or other protective devices to improve system safety
   [b] Installation of redundant circuits in the case of single-circuit failure
2) The products are designed for use in a standard environment and not in any special environments. Application of the products in a special environment can deteriorate product performance. Accordingly, verification and confirmation of product performance, prior to use, is recommended if used under the following conditions:
   [a] Use in various types of liquid, including water, oils, chemicals, and organic solvents
   [b] Use outdoors where the products are exposed to direct sunlight, or in dusty places
   [c] Use in places where the products are exposed to sea winds or corrosive gases, including Cl2, H2S, NH3, SO2, and NO2
   [d] Use in places where the products are exposed to static electricity or electromagnetic waves
   [e] Use in proximity to heat-producing components, plastic cords, or othe flammable items
   [f] Use involving sealing or coating the products with resin or other coating materials
   [g] Use involving unclean solder or use of water or water-soluble cleaning agents for cleaning after soldering
   [h] Use of the products in places subject to dew condensation
3) The products are not radiation resistant.
4) The Company is not responsible for any problems resulting from use of the products under conditions not recommended herein.
5) The Company should be notified of any product safety issues. Moreover, product safety issues should be periodically monitored by the customer.

Precautions Regarding Application Example and External Circuits

1) If change is made to the constant of an external circuit, allow a sufficient margin due to variations of the characteristics of the products and external components, including transient characteristics, as well as static characteristics. Please be informed that the Company has not conducted investigations on whether or not particular changes in the application examples or external circuits would result in the infringement of patent rights of a third party.
2) The application examples, their constants, and other types of information contained herein are applicable only when the products are used in accordance with standard methods.
   Therefore, if mass production is intended, sufficient consideration to external conditions must be made.

Prohibitions Regarding Industrial Property

1) These Specifications contain information related to the Company's industrial property. Any use of them other than pertaining to the usage of appropriate products is not permitted. Duplication of these Specifications and its disclosure to a third party without the Company's permission is prohibited.
2) Information and data on products, including application examples, contained in these specifications are simply for reference; the Company does not guarantee any industrial property rights, intellectual property rights, or any other rights of a third party regarding this information or data. Accordingly, the Company does not bear any responsibility for:
   [a] infringement of the intellectual property rights of a third party
   [b] any problems incurred by the use of the products listed herein.
3) The Company prohibits the purchaser of its products to exercise or use the intellectual property rights, industrial property rights, or any other rights that either belong to or are controlled by the Company, other than the right to use, sell, or dispose of the products.

Notes

- No technical content pages of this document may be reproduced in any form or transmitted by any means without prior permission of ROHM CO.,LTD.
- The contents described herein are subject to change without notice. The specifications for the product described in this document are for reference only. Upon actual use, therefore, please request that specifications to be separately delivered.
- Application circuit diagrams and circuit constants contained herein are shown as examples of standard use and operation. Please pay careful attention to the peripheral conditions when designing circuits and deciding upon circuit constants in the set.
- Any data, including, but not limited to application circuit diagrams information, described herein are intended only as illustrations of such devices and not as the specifications for such devices. ROHM CO.,LTD. disclaims any warranty that any use of such devices shall be free from infringement of any third party's intellectual property rights or other proprietary rights, and further, assumes no liability of whatsoever nature in the event of any such infringement, or arising from or connected with or related to the use of such devices.
- Upon the sale of any such devices, other than for buyer's right to use such devices itself, resell or otherwise dispose of the same, no express or implied right or license to practice or commercially exploit any intellectual property rights or other proprietary rights owned or controlled by
- ROHM CO., LTD. is granted to any such buyer.
- Products listed in this document use silicon as a basic material.
  Products listed in this document are no antiradiation design.

The products listed in this document are designed to be used with ordinary electronic equipment or devices (such as audio visual equipment, office-automation equipment, communications devices, electrical appliances and electronic toys).
Should you intend to use these products with equipment or devices which require an extremely high level of reliability and the malfunction of with would directly endanger human life (such as medical instruments, transportation equipment, aerospace machinery, nuclear-reactor controllers, fuel controllers and other safety devices), please be sure to consult with our sales representative in advance.

About Export Control Order in Japan

Products described herein are the objects of controlled goods in Annex 1 (Item 16) of Export Trade Control Order in Japan.
In case of export from Japan, please confirm if it applies to "objective" criteria or an "informed" (by MITI clause) on the basis of "catch all controls for Non-Proliferation of Weapons of Mass Destruction.