# BT-147

# GNSS Antenna

# Datasheet

**Revision: 5.42**

**Date:2019.11**



## 1. Product Introduction





The BT-147 is a four-star multi-frequency satellite navigation antenna with high gain, miniaturization, high sensitivity, multi-system compatibility and high reliability, which can effectively meet the user's needs.

1. Adopt multi-feed point design and fully symmetrical antenna structure, with very stable phase center, reduce antenna pair measurement error;

2. The gain is high, the standing wave ratio is low, the receiving effect on the low elevation angle signal is obvious, and the star can be normally collected in the occasion where the blocking is serious;

3. equipped with anti-multi-path choke plate, with anti-surge design, can effectively suppress the out-of-band strong interference signal to ensure the reliability of the antenna;

4. using anti-UV PC material design, both beautiful and ensure that the antenna shell does not change color for a long time outdoor use, with IP67 waterproof rating, high temperature resistance, sun protection and UV protection.

## 2. Application Area

This antenna covers the four-star multi-frequency external flying saucer antenna of GPS L1/L2 GLONASS L1/L2 BDS B1/B2/B3 GALILEO E1/E5b, which meets the needs of multi-system compatible and high-precision users of current GNSS measuring equipment. It is widely used in geodesy surveying, navigation surveying, navigation, precision agriculture and marine surveying. It can also be applied to the military field according to the application conditions.

## 3. Specifications

| **Antenna Specifications** | |
|---|---|
| Frequency Range(MHz) | GPS L1/L2<br>GLONASS L1/L2 |

| | |
|---|---|
| | BDS B1/B2/B3<br>GALILEO E1/E5b |
| Gain(dBi) | <5.5 |
| Antenna AR (dB) | ≤3.0 |
| Phase center error(mm) | ±2 |
| Polarization | Right-hand circular polarization |
| Port Impedance | 50Ω |
| **Electrical Specifications** | |
| LNA Gain(dB) | 40±2 |
| Noise figure(dB) | ≤1.8 |
| VSWR | ≤2.0 |
| Operating voltage(V) | 3.0V-18.0V |
| Operating current | ≤45mA |
| **Structural Characteristics** | |
| Connector type | TNC-K |
| Antenna size(mm) | Φ160*66.5 |
| Weight(g) | 400 |
| **Working Environment** | |
| Operating temperature(℃) | -40 - +70 |
| Storage temperature(℃) | -55 - +85 |
| Waterproof grade | IP67 |

## 4. Product Dimension

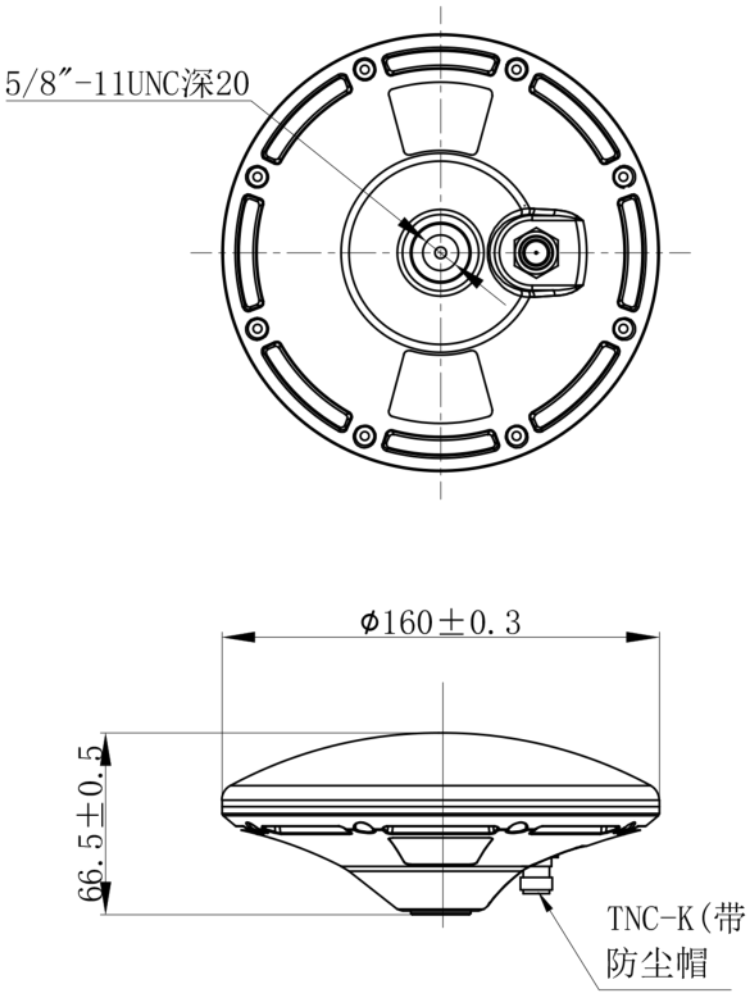
5/8″-11UNC深20
φ160±0.3
66.5±0.5
TNC-K(带
防尘帽