BU941/BU941P
BU941PFI

HIGH VOLTAGE IGNITION COIL DRIVER
NPN POWER DARLINGTON

- NPN DARLINGTON
- INTEGRATED ANTIPARALLEL COLLECTOR-EMITTER DIODE
- VERY RUGGED BIPOLAR TECHNOLOGY
- HIGH OPERATING JUNCTION TEMPERATURE
- WIDE RANGE OF PACKAGES

APPLICATIONS

- HIGH RUGGEDNESS ELECTRONIC IGNITIONS

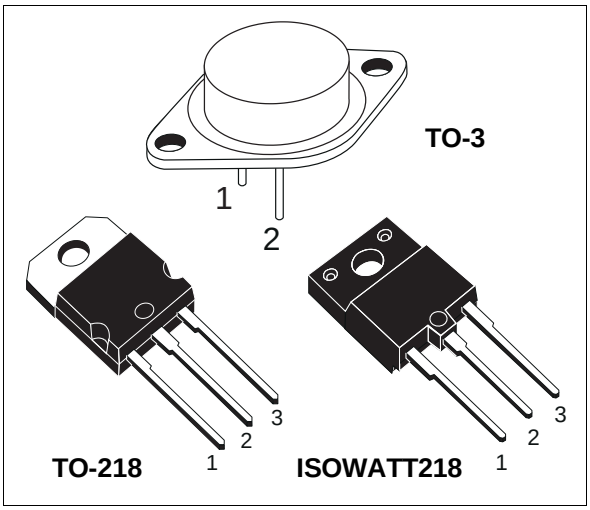

INTERNAL SCHEMATIC DIAGRAM

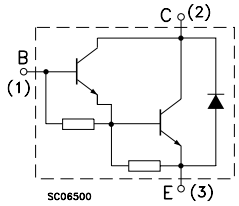

for **TO-3**
Emitter: pin 2
Base: pin1
Collector: tab

ABSOLUTE MAXIMUM RATINGS

Symbol	Parameter	Value			Unit
		BU941	BU941P	BUB941PFI	
V_{CES}	Collector-Emitter Voltage (V_{BE} = 0)	500			V
V_{CEO}	Collector-Emitter Voltage (I_B = 0)	400			V
V_{EBO}	Emitter-Base Voltage (I_C = 0)	5			V
I_C	Collector Current	15			A
I_{CM}	Collector Peak Current	30			A
I_B	Base Current	1			A
I_{BM}	Base Peak Current	5			A
P_{tot}	Total Dissipation at T_c = 25 °C	180	155	65	W
T_{stg}	Storage Temperature	-65 to 200	-65 to 175	-65 to 175	°C
T_j	Max. Operating Junction Temperature	200	175	175	°C

THERMAL DATA

		TO-3	TO-218	ISOWATT218	
$R_{thj\text{-}case}$	Thermal Resistance Junction-case Max	0.97	0.97	2.3	°C/W

ELECTRICAL CHARACTERISTICS (T_{case} = 25 °C unless otherwise specified)

Symbol	Parameter	Test Conditions	Min.	Typ.	Max.	Unit
I_{CES}	Collector Cut-off Current (V_{BE} = 0)	V_{CE} = 500 V V_{CE} = 500 V T_j = 125 °C			100 0.5	µA mA
I_{CEO}	Collector Cut-off Current (I_B = 0)	V_{CE} = 450 V V_{CE} = 450 V T_j = 125 °C			100 0.5	µA mA
I_{EBO}	Emitter Cut-off Current (I_C = 0)	V_{EB} = 5 V			20	mA
$V_{CEO(sus)}$*	Collector-Emitter Sustaining Voltage (I_B = 0)	I_C = 100 mA L = 10 mH V_{Clamp} = 400 V (See FIG.4)	400			V
$V_{CE(sat)}$*	Collector-Emitter Saturation Voltage	I_C = 8 A I_B = 100 mA I_C = 10 A I_B = 250 mA I_C = 12 A I_B = 300 mA			1.6 1.8 2	V V V
$V_{BE(sat)}$*	Base-Emitter Saturation Voltage	I_C = 8 A I_B = 100 mA I_C = 10 A I_B = 250 mA I_C = 12 A I_B = 300 mA			2.2 2.5 2.7	V V V
h_{FE}*	DC Current Gain	I_C = 5 A V_{CE} = 10 V	300			
V_F	Diode Forward Voltage	I_F = 10 A			2.5	V
	Functional Test (see fig. 1)	V_{CC} = 24 V V_{Clamp} = 400 V L = 7 mH	10			A
t_s t_f	INDUCTIVE LOAD Storage Time Fall Time (see fig. 3)	V_{CC} = 12 V V_{Clamp} = 300 V V_{BE} = 0 R_{BE} = 47 Ω L = 7 mH I_C = 7 A I_B = 70 mA		15 0.5		µs µs

* Pulsed: Pulse duration = 300 µs, duty cycle 1.5 %

Safe Operating Area

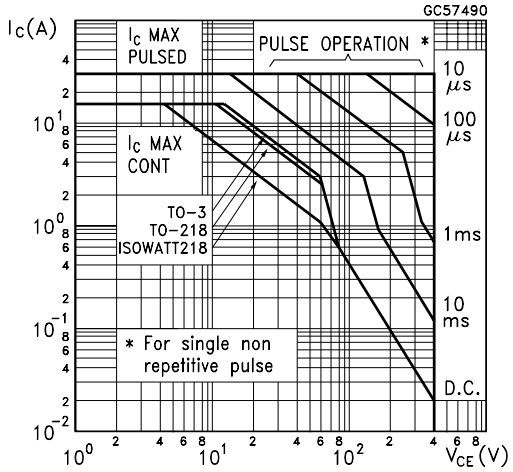

DC Current Gain

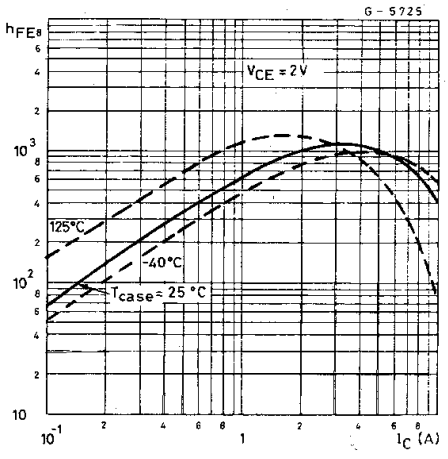

DC Current Gain

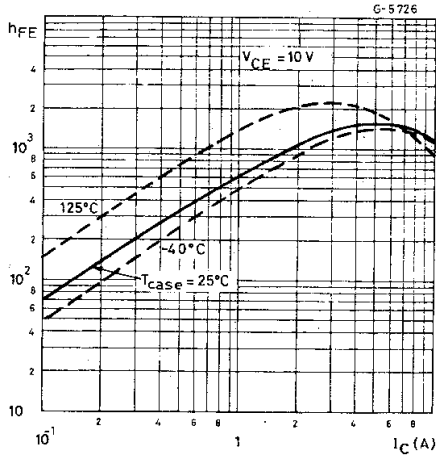

Collector-emitter Saturation Voltage

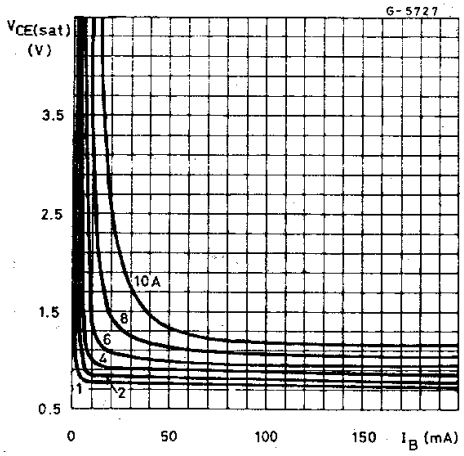

Collector-emitter Saturation Voltage

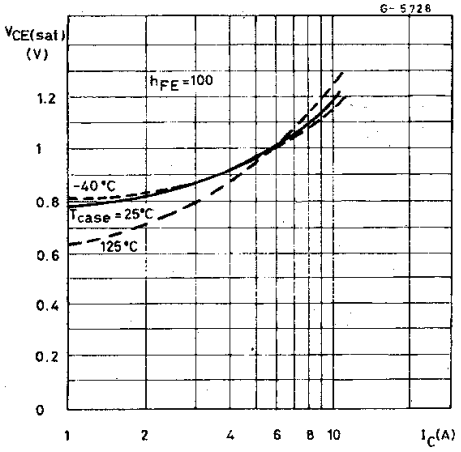

Base-emitter Saturation Voltage

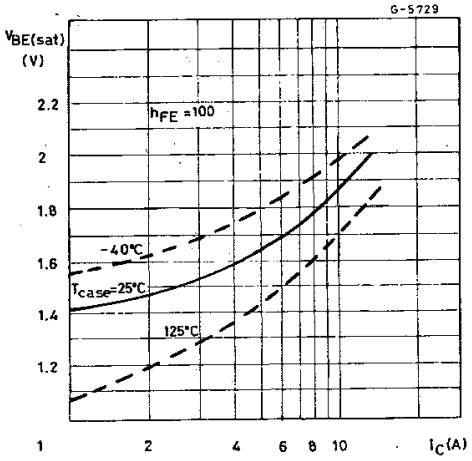

Switching Time Inductive Load (see fig.3)

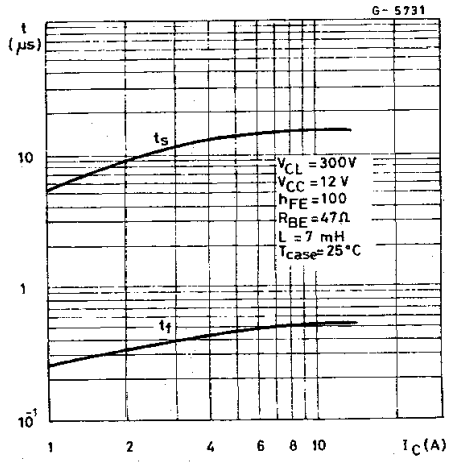

FIGURE 1: Functional Test Circuit

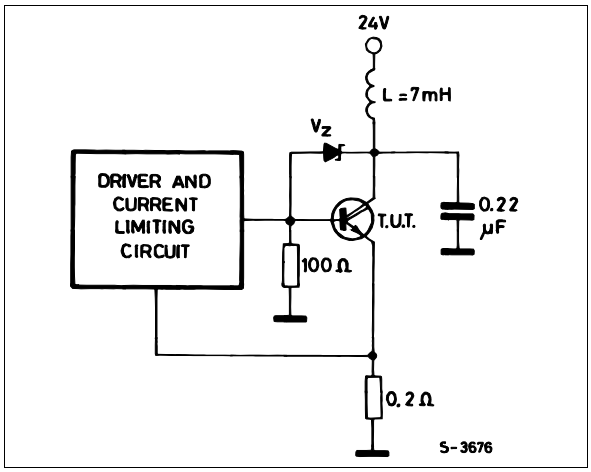

FIGURE 2: Functional Test Waveforms

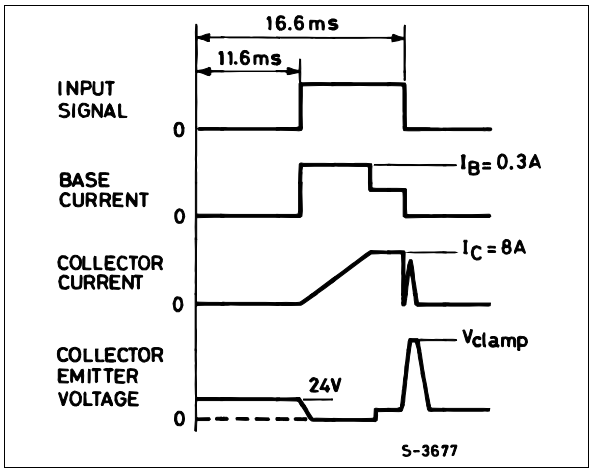

FIGURE 3: Switching Time Test Circuit

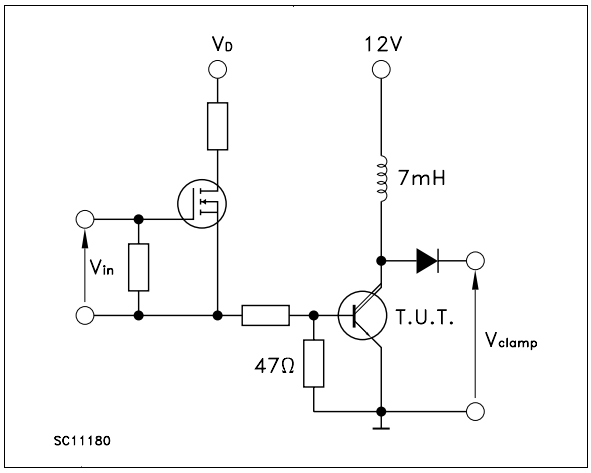

FIGURE 4: Sustaining Voltage Test Circuit

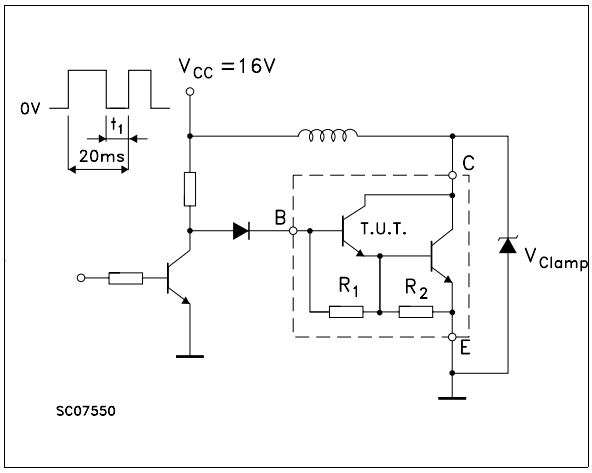

TO-3 MECHANICAL DATA

DIM.	mm			inch		
	MIN.	TYP.	MAX.	MIN.	TYP.	MAX.
A	11.00		13.10	0.433		0.516
B	0.97		1.15	0.038		0.045
C	1.50		1.65	0.059		0.065
D	8.32		8.92	0.327		0.351
E	19.00		20.00	0.748		0.787
G	10.70		11.10	0.421		0.437
N	16.50		17.20	0.649		0.677
P	25.00		26.00	0.984		1.023
R	4.00		4.09	0.157		0.161
U	38.50		39.30	1.515		1.547
V	30.00		30.30	1.187		1.193

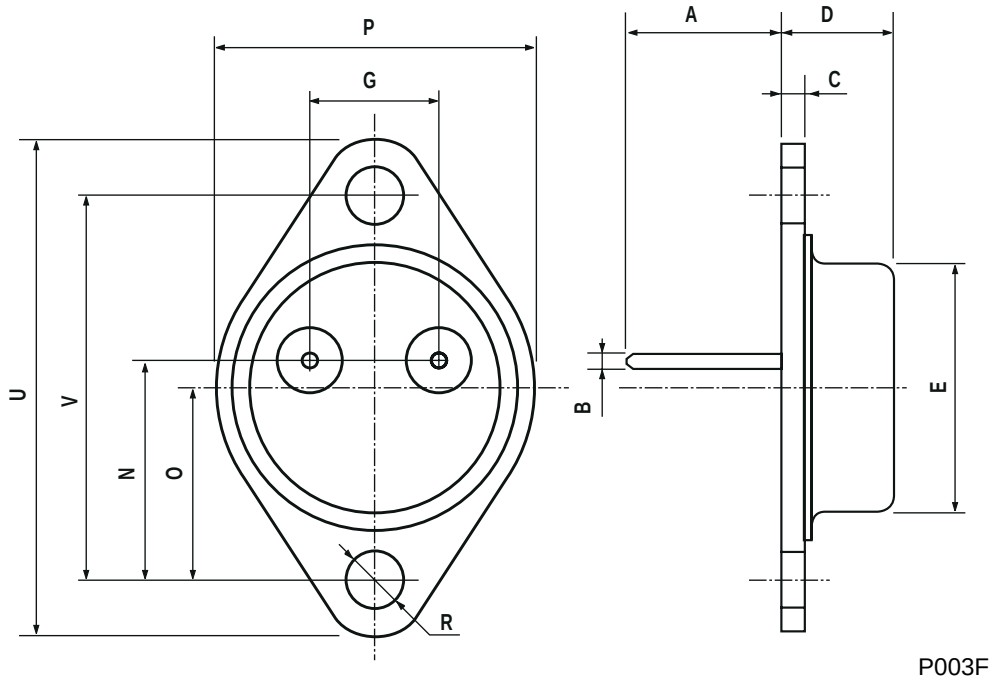

P003F

TO-218 (SOT-93) MECHANICAL DATA

DIM.	mm			inch		
	MIN.	TYP.	MAX.	MIN.	TYP.	MAX.
A	4.7		4.9	0.185		0.193
C	1.17		1.37	0.046		0.054
D		2.5			0.098	
E	0.5		0.78	0.019		0.030
F	1.1		1.3	0.043		0.051
G	10.8		11.1	0.425		0.437
H	14.7		15.2	0.578		0.598
L2	–		16.2	–		0.637
L3		18			0.708	
L5	3.95		4.15	0.155		0.163
L6		31			1.220	
R	–		12.2	–		0.480
Ø	4		4.1	0.157		0.161

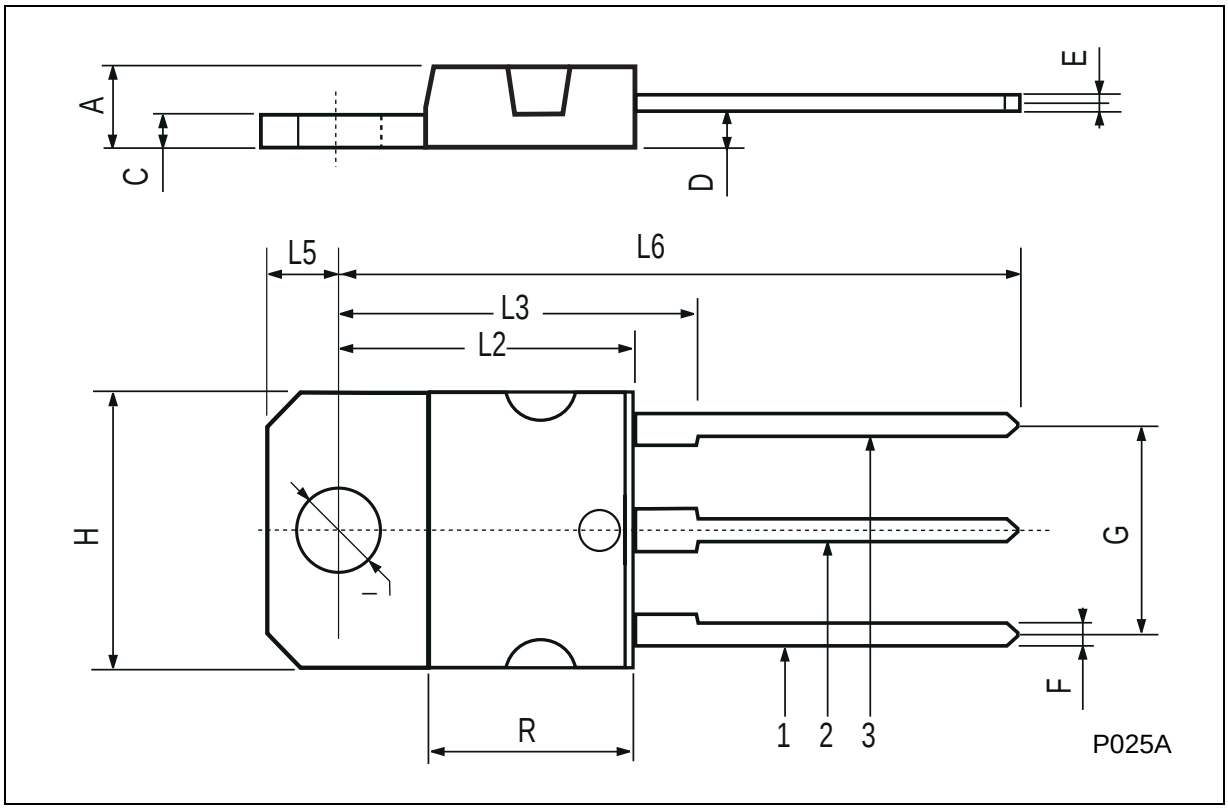

ISOWATT218 MECHANICAL DATA

DIM.	mm			inch		
	MIN.	TYP.	MAX.	MIN.	TYP.	MAX.
A	5.35		5.65	0.211		0.222
C	3.30		3.80	0.130		0.150
D	2.90		3.10	0.114		0.122
D1	1.88		2.08	0.074		0.082
E	0.75		0.95	0.030		0.037
F	1.05		1.25	0.041		0.049
F2	1.50		1.70	0.059		0.067
F3	1.90		2.10	0.075		0.083
G	10.80		11.20	0.425		0.441
H	15.80		16.20	0.622		0.638
L		9			0.354	
L1	20.80		21.20	0.819		0.835
L2	19.10		19.90	0.752		0.783
L3	22.80		23.60	0.898		0.929
L4	40.50		42.50	1.594		1.673
L5	4.85		5.25	0.191		0.207
L6	20.25		20.75	0.797		0.817
N	2.1		2.3	0.083		0.091
R		4.6			0.181	
DIA	3.5		3.7	0.138		0.146

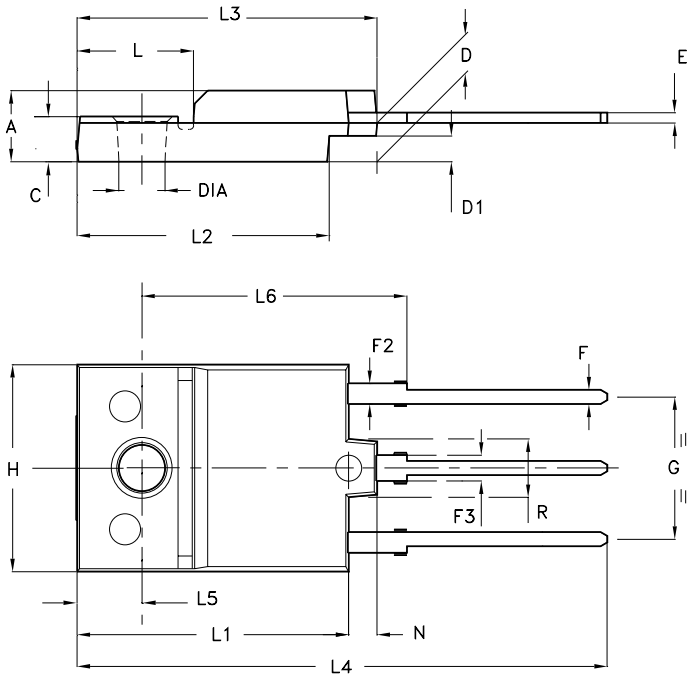

- Weight : 4.9 g (typ.)
- Maximum Torque (applied to mounting flange) Recommended: 0.8 Nm; Maximum: 1 Nm
- The side of the dissipator must be flat within 80 μm

P025C/A

Information furnished is believed to be accurate and reliable. However, STMicroelectronics assumes no responsibility for the consequences of use of such information nor for any infringement of patents or other rights of third parties which may result from its use. No license is granted by implication or otherwise under any patent or patent rights of STMicroelectronics. Specification mentioned in this publication are subject to change without notice. This publication supersedes and replaces all information previously supplied. STMicroelectronics products are not authorized for use as critical components in life support devices or systems without express written approval of STMicroelectronics.

The ST logo is a trademark of STMicroelectronics

© 1999 STMicroelectronics – Printed in Italy – All Rights Reserved

STMicroelectronics GROUP OF COMPANIES

Australia - Brazil - China - Finland - France - Germany - Hong Kong - India - Italy - Japan - Malaysia - Malta - Morocco - Singapore - Spain - Sweden - Switzerland - United Kingdom - U.S.A.

http://www.st.com