BU941Z/BU941ZP
BU941ZPFI

HIGH VOLTAGE IGNITION COIL DRIVER
NPN POWER DARLINGTON TRANSISTOR

- VERY RUGGED BIPOLAR TECHNOLOGY
- BUILT IN CLAMPING ZENER
- HIGH OPERATING JUNCTION TEMPERATURE
- WIDE RANGE OF PACKAGES
- FULLY INSULATED PACKAGE (U.L. COMPLIANT) FOR EASY MOUNTING

APPLICATIONS

- HIGH RUGGEDNESS ELECTRONIC IGNITIONS

DESCRIPTION

The devices are bipolar Darlington transistors manufactured using Multiepitaxial Planar technology. They have been properly designed to be used in Automotive environment as electronic ignition power actuators.

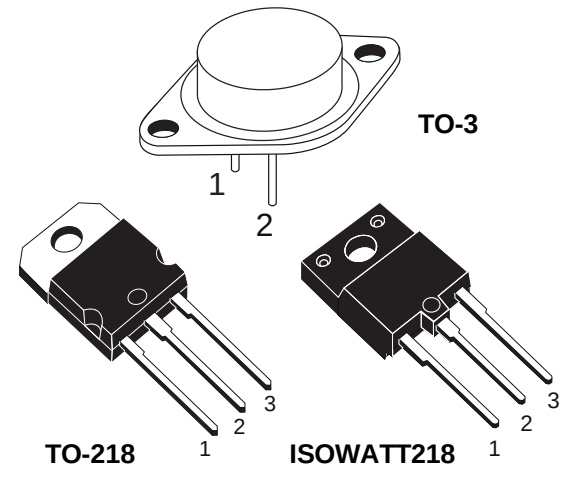

INTERNAL SCHEMATIC DIAGRAM

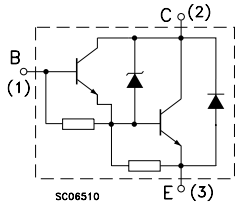

for **TO-3**
Emitter: pin 2
Base: pin1
Collector: tab

ABSOLUTE MAXIMUM RATINGS

Symbol	Parameter	Value			Unit
		BU941Z	BU941ZP	BU941ZPFI	
V_{CEO}	Collector-Emitter Voltage (I_B = 0)	350			V
V_{EBO}	Emitter-Base Voltage (I_C = 0)	5			V
I_C	Collector Current	15			A
I_{CM}	Collector Peak Current	30			A
I_B	Base Current	1			A
I_{BM}	Base Peak Current	5			A
P_{tot}	Total Dissipation at T_c = 25 °C	180	155	65	W
V_{isol}	Insulation Withstand Voltage (RMS) from All Three Leads to Exernal Heatsink			2500	V
T_{stg}	Storage Temperature	-65 to 200	-65 to 175	-65 to 175	°C
T_j	Max. Operating Junction Temperature	200	175	175	°C

THERMAL DATA

		TO-3	TO-218	ISOWATT218	
$R_{thj\text{-}case}$	Thermal Resistance Junction-case Max	0.97	0.97	2.3	°C/W

ELECTRICAL CHARACTERISTICS (T_{case} = 25 °C unless otherwise specified)

Symbol	Parameter	Test Conditions	Min.	Typ.	Max.	Unit
I_{CEO}	Collector Cut-off Current (I_B = 0)	V_{CE} = 300 V V_{CE} = 300 V T_C = 125 °C			100 0.5	µA mA
I_{EBO}	Emitter Cut-off Current (I_C = 0)	V_{EB} = 5 V			20	mA
V_{CL}*	Clamping Voltage	I_C = 100 mA	350		500	V
$V_{CE(sat)}$*	Collector-Emitter Saturation Voltage	I_C = 8 A I_B = 100 mA I_C = 10 A I_B = 250 mA I_C = 12 A I_B = 300 mA			1.8 1.8 2	V V V
$V_{BE(sat)}$*	Base-Emitter Saturation Voltage	I_C = 8 A I_B = 100 mA I_C = 10 A I_B = 250 mA I_C = 12 A I_B = 300 mA			2.2 2.5 2.7	V V V
h_{FE}*	DC Current Gain	I_C = 5 A V_{CE} = 10 V	300			
V_F	Diode Forward Voltage	I_F = 10 A			2.5	V
	Functional Test	V_{CC} = 24 V L = 7 mH (see fig. 1)	10			A
t_s t_f	INDUCTIVE LOAD Storage Time Fall Time	V_{CC} = 12 V L = 7 mH V_{BE} = 0 R_{BE} = 47 Ω V_{clamp} = 300 V I_C = 7 A I_B = 70 mA (see fig. 3)		15 0.5		µs µs

* Pulsed: Pulse duration = 300 µs, duty cycle 1.5 %

Safe Operating Areas

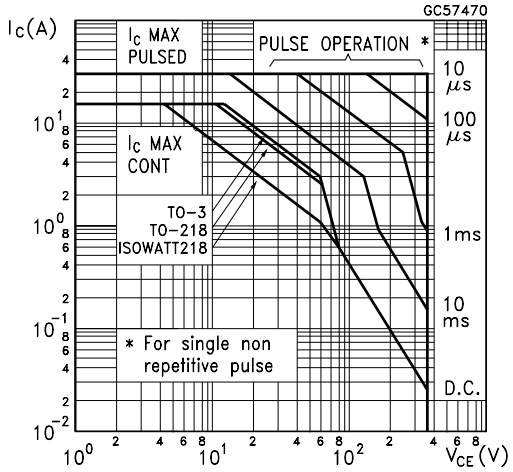

Derating Curves (TO-3)

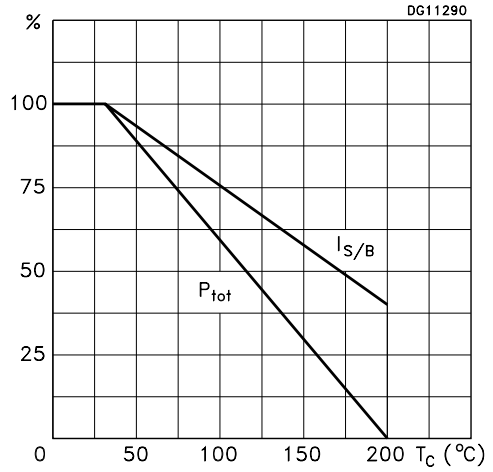

Derating Curves (TO-218/ISOWATT218)

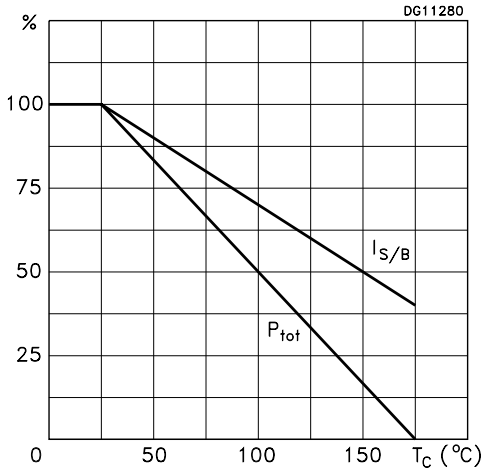

DC Current Gain

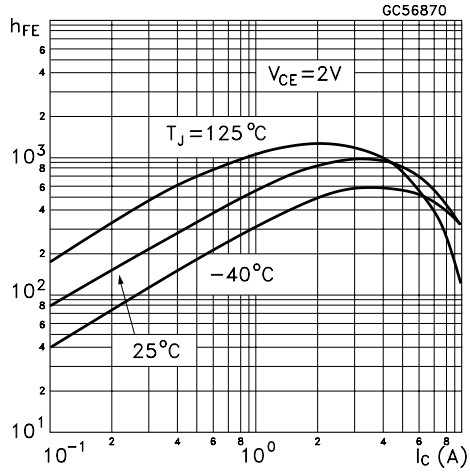

DC Current Gain

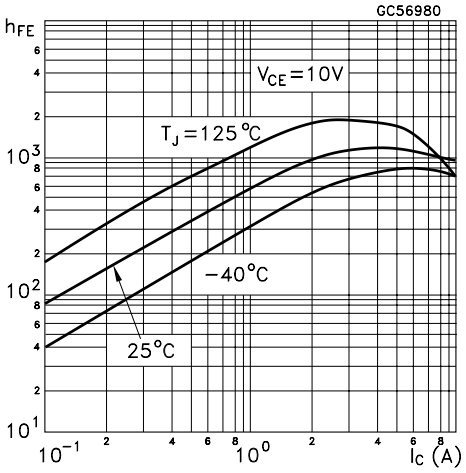

Collector-emitter Saturation Voltage

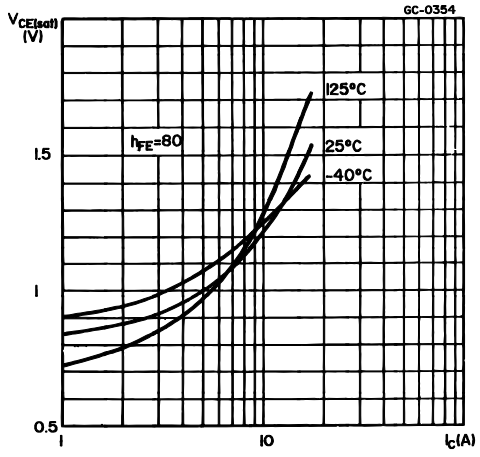

Collector-emitter Saturation Voltage

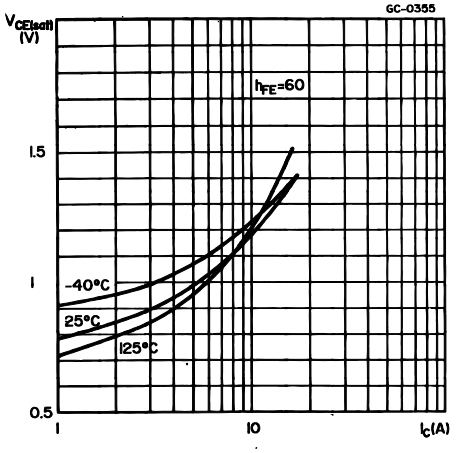

Base-emitter Saturation Voltage

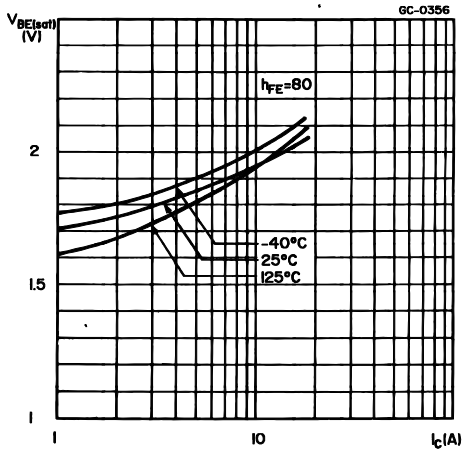

Base-emitter Saturation Voltage

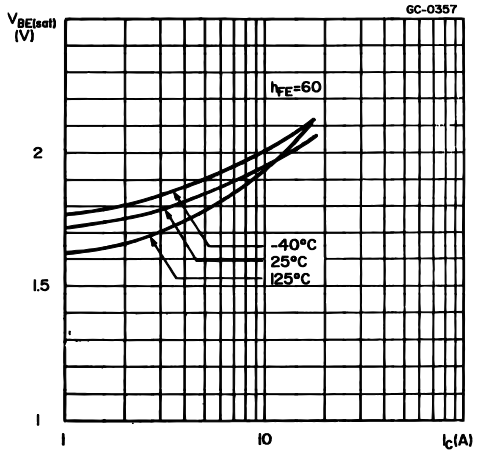

Collector-emitter Saturation Voltage

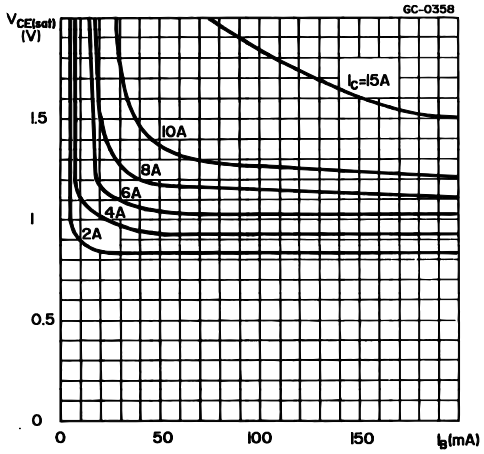

FIGURE 1: Functional Test Circuit

FIGURE 2: Functional Test Waveforms

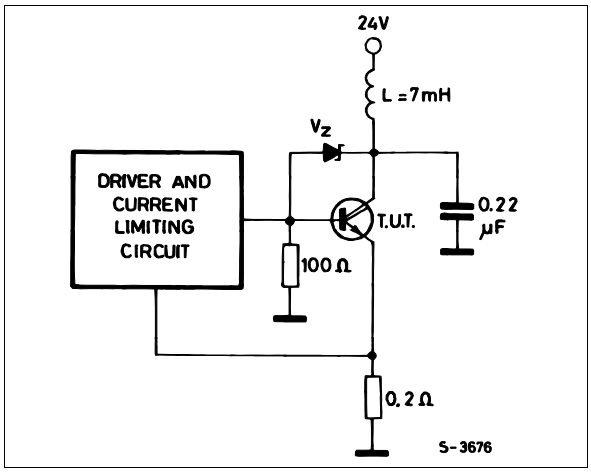

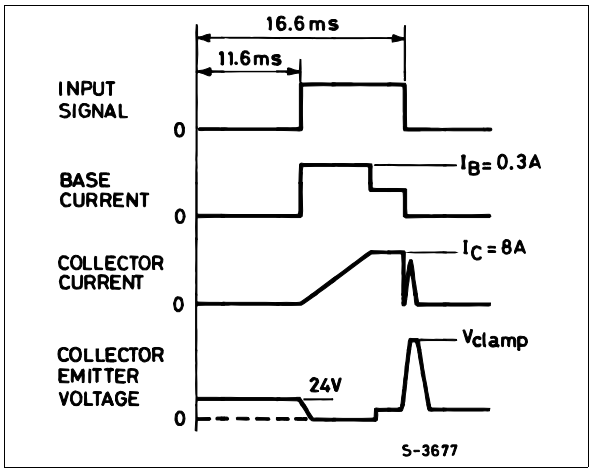

FIGURE 3: Switching Time Test Circuit

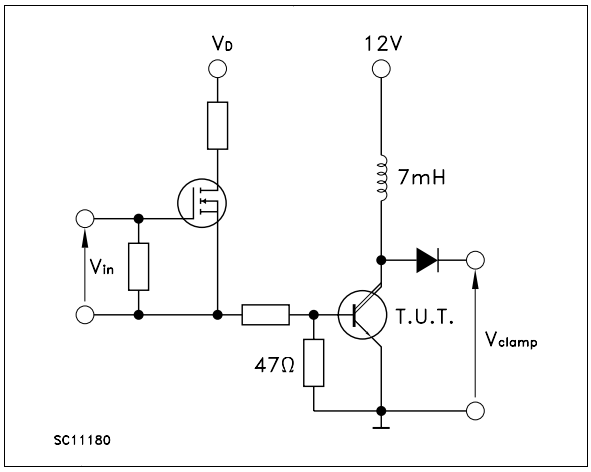

TO-3 MECHANICAL DATA

DIM.	mm			inch		
	MIN.	TYP.	MAX.	MIN.	TYP.	MAX.
A	11.00		13.10	0.433		0.516
B	0.97		1.15	0.038		0.045
C	1.50		1.65	0.059		0.065
D	8.32		8.92	0.327		0.351
E	19.00		20.00	0.748		0.787
G	10.70		11.10	0.421		0.437
N	16.50		17.20	0.649		0.677
P	25.00		26.00	0.984		1.023
R	4.00		4.09	0.157		0.161
U	38.50		39.30	1.515		1.547
V	30.00		30.30	1.187		1.193

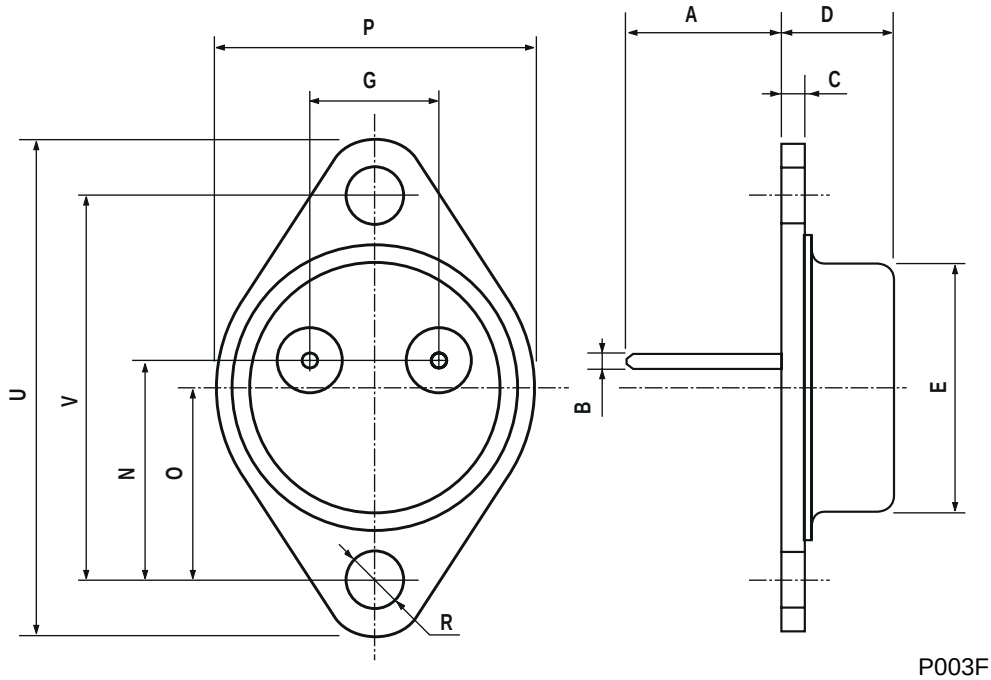

P003F

TO-218 (SOT-93) MECHANICAL DATA

DIM.	mm			inch		
	MIN.	TYP.	MAX.	MIN.	TYP.	MAX.
A	4.7		4.9	0.185		0.193
C	1.17		1.37	0.046		0.054
D		2.5			0.098	
E	0.5		0.78	0.019		0.030
F	1.1		1.3	0.043		0.051
G	10.8		11.1	0.425		0.437
H	14.7		15.2	0.578		0.598
L2	–		16.2	–		0.637
L3		18			0.708	
L5	3.95		4.15	0.155		0.163
L6		31			1.220	
R	–		12.2	–		0.480
Ø	4		4.1	0.157		0.161

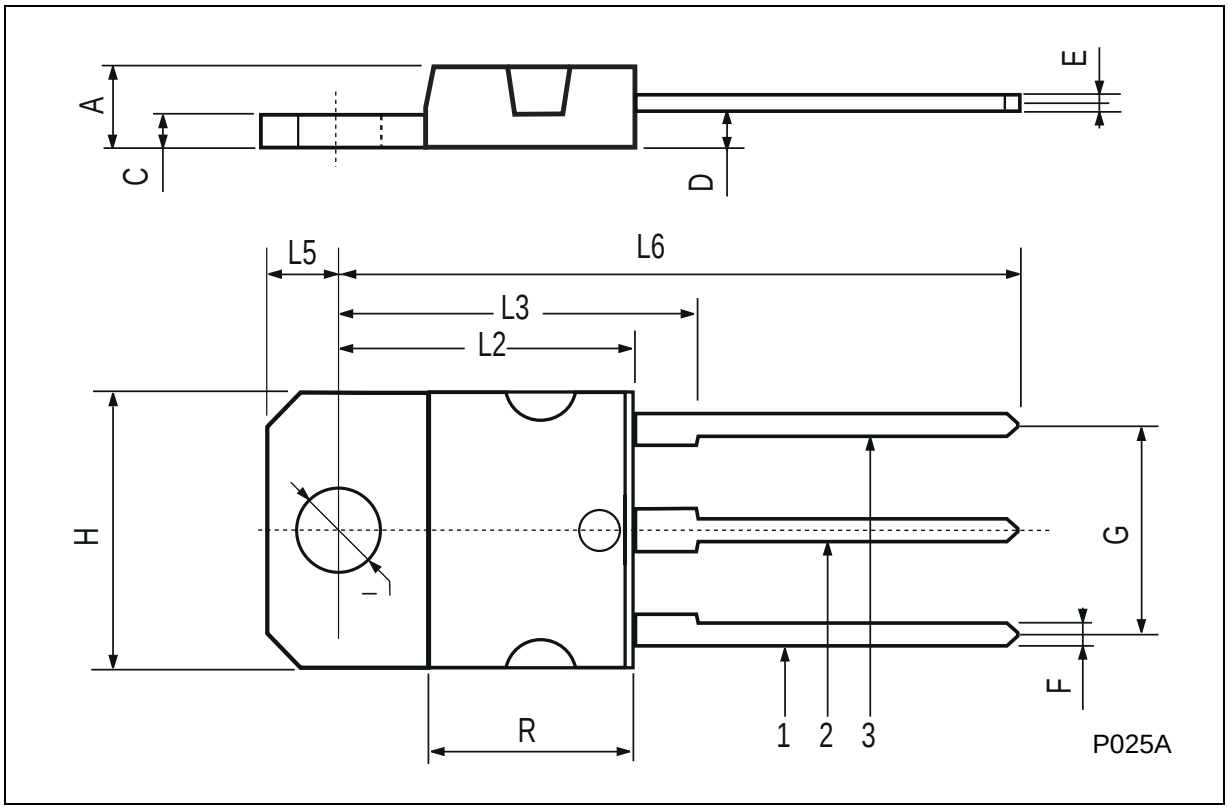

ISOWATT218 MECHANICAL DATA

DIM.	mm			inch		
	MIN.	TYP.	MAX.	MIN.	TYP.	MAX.
A	5.35		5.65	0.211		0.222
C	3.30		3.80	0.130		0.150
D	2.90		3.10	0.114		0.122
D1	1.88		2.08	0.074		0.082
E	0.75		0.95	0.030		0.037
F	1.05		1.25	0.041		0.049
F2	1.50		1.70	0.059		0.067
F3	1.90		2.10	0.075		0.083
G	10.80		11.20	0.425		0.441
H	15.80		16.20	0.622		0.638
L		9			0.354	
L1	20.80		21.20	0.819		0.835
L2	19.10		19.90	0.752		0.783
L3	22.80		23.60	0.898		0.929
L4	40.50		42.50	1.594		1.673
L5	4.85		5.25	0.191		0.207
L6	20.25		20.75	0.797		0.817
N	2.1		2.3	0.083		0.091
R		4.6			0.181	
DIA	3.5		3.7	0.138		0.146

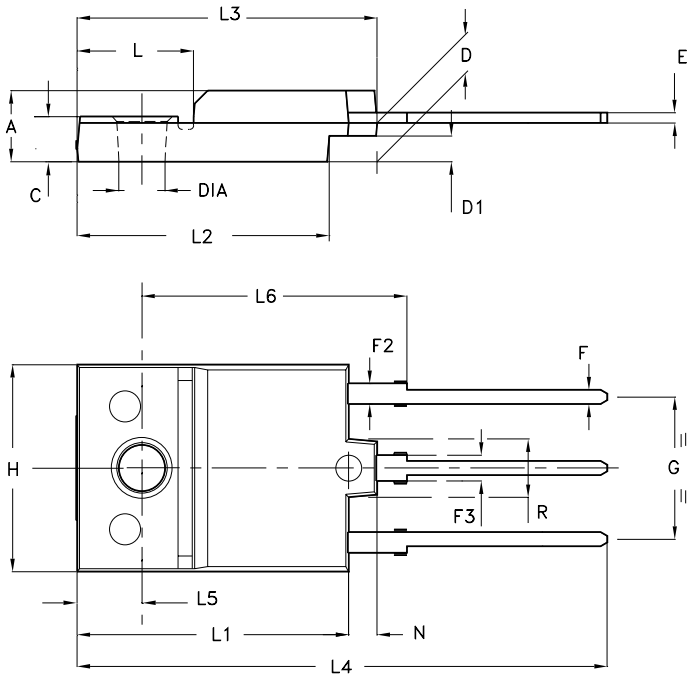

- Weight : 4.9 g (typ.)
- Maximum Torque (applied to mounting flange) Recommended: 0.8 Nm; Maximum: 1 Nm
- The side of the dissipator must be flat within 80 μm

P025C/A

Information furnished is believed to be accurate and reliable. However, STMicroelectronics assumes no responsibility for the consequences of use of such information nor for any infringement of patents or other rights of third parties which may result from its use. No license is granted by implication or otherwise under any patent or patent rights of STMicroelectronics. Specification mentioned in this publication are subject to change without notice. This publication supersedes and replaces all information previously supplied. STMicroelectronics products are not authorized for use as critical components in life support devices or systems without express written approval of STMicroelectronics.

The ST logo is a trademark of STMicroelectronics

© 2002 STMicroelectronics – Printed in Italy – All Rights Reserved

STMicroelectronics GROUP OF COMPANIES

Australia - Brazil - Canada - China - Finland - France - Germany - Hong Kong - India - Israel - Italy - Japan - Malaysia - Malta - Morocco - Singapore - Spain - Sweden - Switzerland - United Kingdom - United States.

http://www.st.com