RN-41-SM / RN-42-SM

www.rovingnetworks.com

rn-41sm-ds 7/12/2010

Class 1 / Class 2 Bluetooth® Socket Module



Features

- Socket module with UART interface
- 3.3/5V logic CMOS I/O (RS-232 as well)
- Fully qualified Bluetooth 2.1/2.0/1.2/1.1 module
- Bluetooth v2.1+EDR support
- Low power *(8-30mA connected, 2mA idle)*
- UART supports baud rates from 1200 to 3Mbit
- Sustained SPP data rates - 240Kbps (slave), 300Kbps (master)
- HCI data rates - 1.5Mbps sustained, 3.0Mbps burst in HCI mode
- HCI mode, or SPP/DUN software stacks available.
- Embedded Bluetooth stack profiles included *(requires no host stack)*: GAP, SDP, RFCOMM and L2CAP, with SPP, DUN and HID profiles.
- RS232 on board with power enable on IO pin.
- Bluetooth SIG Qualified, End Product Listing
- Class 1 high power amplifier (RN-41-SM only) with on board ceramic RF chip antenna.
    - Certifications: FCC, ICS, CE
    - Environmentally friendly, RoHS compliant

Applications

- Cable replacement
- Barcode scanners
- Measurement and monitoring systems
- Industrial sensors and controls
- Medical devices
- Asset tacking

Description

The RN-41-SM / RN-42-SM is a though hole, low power and highly flexible Bluetooth socket module . This module supports SPP/DUN and HCI Bluetooth interface protocols, is simple to design in and fully certified. With its high performance on chip antenna and support for Bluetooth® Enhanced Data Rate (EDR), the RN-41 / RN-42 delivers up to 3 Mbps data rate for distances to 100M / 20M. The RN-41/RN-42 socket module is the perfect method for adding Bluetooth wireless capability to existing products without redesign, saving you significant time and money.

Block Diagram

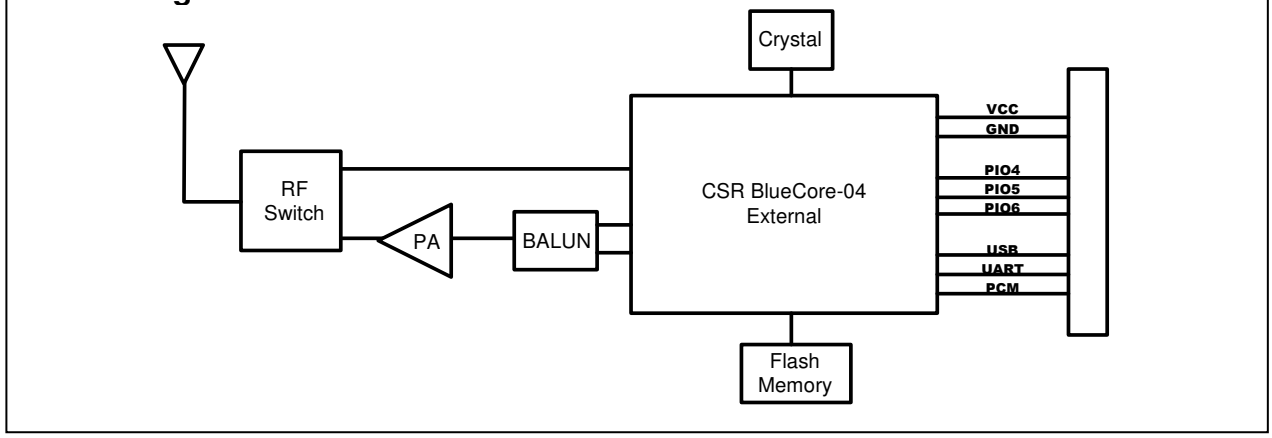

Overview

- Baud rate speeds: 1200bps up to 921Kbps, non-standard baud rates can be programmed.
- RN-41: Class 1 radio, 330' (100m) distance, 12dBm output transmitter, -80dBm typical receive sensitivity
- RN-42: Class 2 radio, 60' (20m) distance, 4dBm output transmitter, -80dBm typical receive sensitivity
- Frequency 2402 ~ 2480MHz,
- FHSS/GFSK modulation, 79 channels at 1MHz intervals
- Secure communications, 128 bit encryption
- Error correction for guaranteed packet delivery
- UART local and over-the-air RF configuration
- Auto-discovery/pairing requires no software configuration (instant cable replacement).
- Auto-connect master, IO pin (DTR) and character based trigger modes

Environmental Conditions

Parameter	Value
Temperature Range (Operating)	-40 °C ~ 85 °C
Temperature Range (Storage)	-40 °C ~ 85 °C
Relative Humidity (Operating)	≤90%
Relative Humidity (Storage)	≤90%

Electrical Characteristics (RN-41-SM)

Parameter	Min	Typ.	Max.	Unit
Supply Voltage (DC)	3.0	3.3	**3.3V on Header A, 16V on Header B**	V
RX Supply Current		35	60	mA
TX Supply Current		65	85	mA
Average power consumption				
Standby/Idle (default settings)		25		mA
Connected (normal mode)		30		mA
Connected (low power Sniff)		8		mA
Standby/Idle (Deep sleep enabled)	250uA	2.5		mA

Electrical Characteristics (RN-42-SM)

Parameter	Min	Typ.	Max.	Unit
Supply Voltage (DC)	3.0	3.3	**3.3V on Header A, 16V on Header B**	V
Average power consumption				
Radio ON* (Discovery or Inquiry window time)		40		mA
Connected Idle (No Sniff)		25		mA
Connected Idle (Sniff 100 milli secs)		12		mA
Connected with data transfer	40	45	50	mA
Deep Sleep Idle mode		26		uA

Radio Characteristics (RN-41)

Parameter	Freq. (GHz)	Min	Typ	Max	Bluetooth Specification	Units
Sensitivity @ 0.1%BER	2.402	-	-80	-86	≤ -70	dBm
	2.441	-	-80	-86		dBm
	2.480	-	-80	-86		dBm
RF Transmit Power	2.402	15.0	16.0		≤ 15	dBm
	2.441	15.0	16.0			dBm
	2.480	15.0	16.0			dBm
Initial Carrier Frequency Tolerance	2.402	-	5	75	75	kHz
	2.441	-	5	75		kHz
	2.480	-	5	75		kHz
20dB bandwidth for modulated carrier		-	900	1000	≤ 1000	kHz
Drift (Five slots packet)		-	15	-	40	kHz
Drift Rate		-	13	-	20	kHz
$\Delta f1_{avg}$ Max Modulation	2.402	140	165	175	>140	kHz
	2.441	140	165	175		kHz
	2.480	140	165	175		kHz
$\Delta f2_{avg}$ Min Modulation	2.402	140	190	-	115	kHz
	2.441	140	190	-		kHz
	2.480	140	190	-		kHz

Radio Characteristics (RN-42)

Parameter	Freq. (GHz)	Min	Typ	Max	Bluetooth Specification	Units
Sensitivity @ 0.1%BER	2.402	-	-80	-86	≤ -70	dBm
	2.441	-	-80	-86		dBm
	2.480	-	-80	-86		dBm
RF Transmit Power	2.402	0	2	4	≤ 4	dBm
	2.441	0	2	4		dBm
	2.480	0	2	4		dBm
Initial Carrier Frequency Tolerance	2.402	-	5	75	75	kHz
	2.441	-	5	75		kHz
	2.480	-	5	75		kHz
20dB bandwidth for modulated carrier		-	900	1000	≤ 1000	kHz
Drift (Five slots packet)		-	15	-	40	kHz
Drift Rate		-	13	-	20	kHz
$\Delta f1_{avg}$ Max Modulation	2.402	140	165	175	>140	kHz
	2.441	140	165	175		kHz
	2.480	140	165	175		kHz
$\Delta f2_{avg}$ Min Modulation	2.402	140	190	-	115	kHz
	2.441	140	190	-		kHz
	2.480	140	190	-		kHz

Pin Description

NOTE: The RN-41 and the RN-42 are pin and functionally compatible.

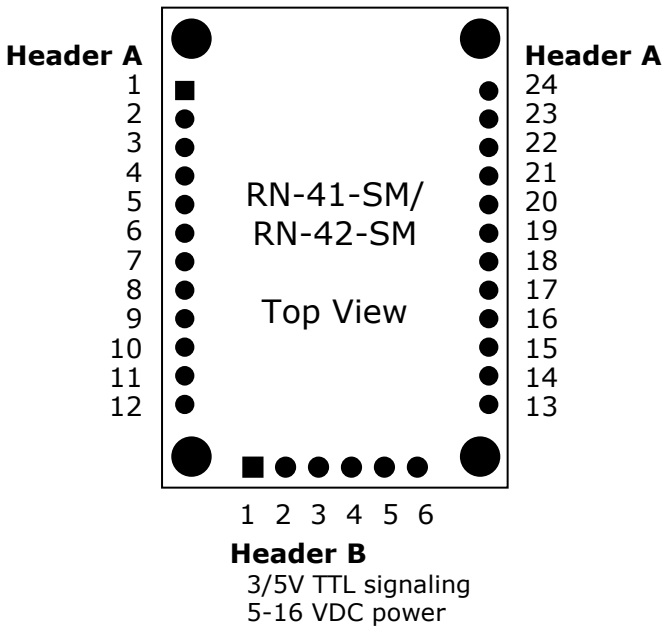

Signals on **Header A** except pins 4, 5, 6 and 7 have the following logic levels.

Input logic level LOW is from -0.4 v to 0.8 V, input high is from 2.1 to 3.4V.

Output logic level LOW max is 0.2 and output HIGH is minimum is 2.8.

All I/O's except reset default to weak pull down.

Header A

Pin	Name	Description	Default State
1	PIO6	Set BT master (HIGH=auto-master mode)	Input with weak pulldown
2	PIO7	Set Baud rate (HIGH = force 9600, LOW = 115K or firmware setting)	Input with weak pulldown
3	RESET	Active LOW reset	Input to RN41 with 1K pullup
4	RX	RS232 receive input (see note below)	
5	TX	RS232 transmit output (see note below)	
6	RTS	RS232 RTS (see note below)	
7	CTS	RS232 CTS (see note below)	
8	VB2	Analog battery monitor signal (Not currently supported in firmware)	No Connect
9	SHUT DOWN	Shuts down power to the entire module.	Active LOW
10	PRS	RS232 power Short to pin 11 VCC to enable RS232	
11	VCC 3.3	3.3V regulated power input	
12	GND	Ground	

13	VB1	Analog battery monitor signal	No Connect
14	PIO8	Status (RF data rx/tx)	Output
15	PIO9	IO	Input with weak pulldown
16	PIO10	IO (remote DTR signal)	Input with weak pulldown
17	PIO11	IO (remote RTS signal)	Input with weak pulldown
18	RXDB	UART receive	Input
19	TXDB	UART transmit	Output
20	RTSB	UART RTS, goes HIGH to disable host transmitter	Output
21	CTSB	UART CTS, if set HIGH, disables TX transmitter	input
22	PIO2	Status, HIGH when connected, LOW otherwise	Output from RN41
23	PIO3	Auto discovery = HIGH	Input t with weak pulldown
24	PIO4	Set factory defaults	Input with weak pulldown

Note: When connecting to the RS232 signals on header A: You must connect pin 10 (PRS) to pin 11 (VCC). This powers the RS232 chip. Also make sure that R6 and R8 are installed (default condition).

Header B

1	RX	Receive UART	Input to module
2	TX	Transmit UART	Output from module
3	RTS	RTS UART, goes HIGH to disable host transmitter	
4	CTS	CTS UART, if set HIGH, disables transmitter	Tie to RTS if NOT driven
5	VDD	5-16 VDC	
6	GND	Ground	

Note: To use Header B you must remove resistors R6 and R8. Removing these resistors disconnects the RX (header A pin 4) and CTS (header A pin 7) signals from the RS232 chip.

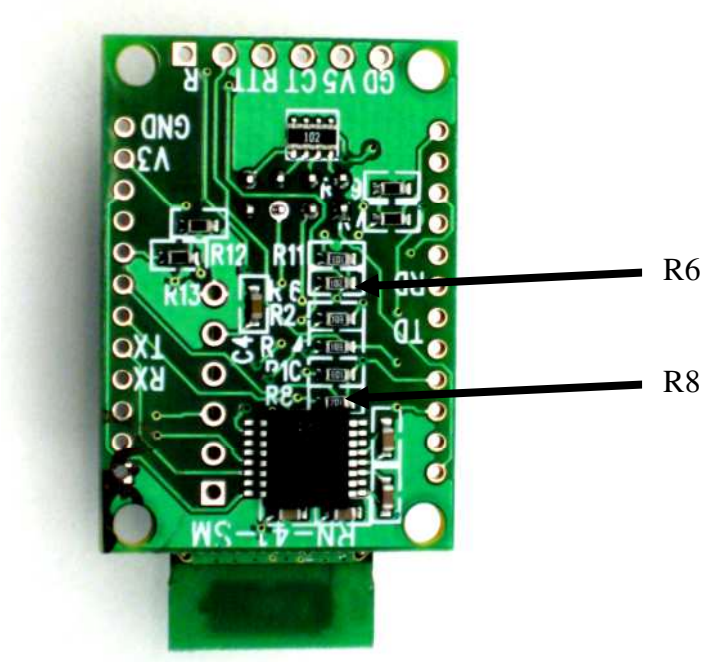

Jumper Settings

The bank of headers on the top of the module control PIO4, PIO5, PIO6 and PIO7 and correspond directly to the external switches on the Firefly Bluetooth serial adapter.

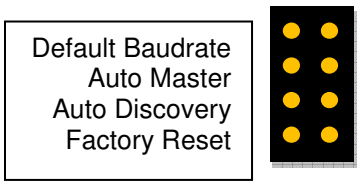

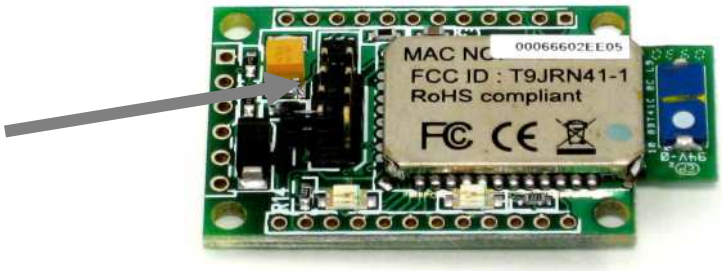

Default Baudrate OFF = 115K (can be overridden by software baud rate configuration command), ON = 9600 (ignores software baudrate configuration)

Auto Discovery In slave mode, sets a special class of device that is used the master to auto connect. If Switch 3 also ON, the device performs a search, stores, and connects to a remote slave which has this switch 2 set.

Auto Master Device acts as Bluetooth master, auto-connects to a stored remote address. First set the Bluetooth address of the slave device using the SR command or through instant cable replacement settings.

Restore Factory Defaults Set this switch ON, power up unit, and toggle the switch from ON to OFF 3 times to return the unit to factory settings.

Status LEDs

The Green LED indicates the status of the Bluetooth connection and when the device is in configuration mode.

MODE	GREEN LED	RED LED
Fast, 10 x per second	In Configuration mode	
2 times per second	Boot up, Remote Configurable	
1 time per second	Discoverable/Idle	Data over the UART
On Solid	Connected	

Hardware Connections and Power

Placing 3.3Vdc into the PIO's outputs will permanently damage the radio modules. The failure mode is short across GND and VCC. Use a 10KΩ resistor in series or a 10KΩ pull up resistor for input and output PIO's respectively.

- Make sure to connect a common ground when using the external TX, RX inputs 0 – 3.3Vdc.
- For a 3 wire DB-9 interface (tx, rx, gnd only) connect/short CTS to RTS, Factory default is hardware flow control enabled CTS and RTS connected.
- When using a 5.0Vdc Input, PIO's require a voltage divider. A good choice is 10K ohm series with 20K to Ground. PIO's are 0-3.3Vdc not 5 volt tolerant.

Hardware Communications Connections for Modules

RN-41-SM / RN-42-SM **TX → RX** of the application Micro Controller Unit (MCU)
RN-41-SM / RN-42-SM **RX ← TX** of the application Micro Controller Unit (MCU)
RN-41-SM / RN-42-SM **RTS → CTS** of the application Micro Controller Unit (MCU)
RN-41-SM / RN-42-SM **CTS ← RTS** of the application Micro Controller Unit (MCU)

Mechanical Dimensions

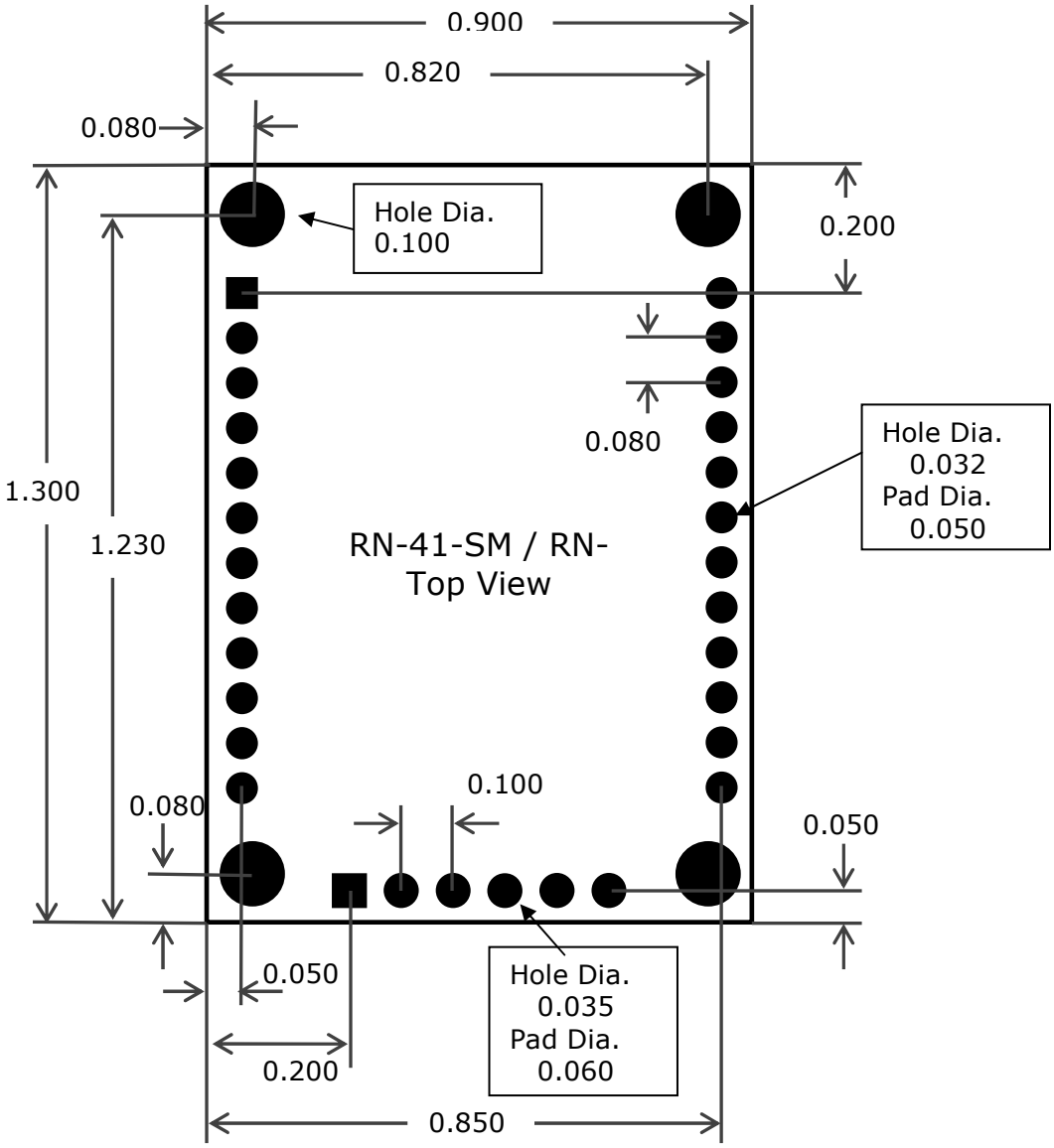

Design Concerns

1. ***Reset circuit***. RN-41-SM / RN-42-SM contains a 1k pullup to VCC, the polarity of reset on the RN-41 / RN-42 is ACTIVE LOW. A power on reset circuit with delay is OPTIONAL on the reset pin of the module. It should only be required if the input power supply has a very slow ramp, or tends to bounce or have instability on power up. Use microcontroller GPIO to control reset once power is stable. Also can be driven from low cost power supervisor chips available, such as MCP809, MCP102/121, and Torex XC61F.

2. ***Factory reset PIO4.*** Connect this pin to a switch, or jumper, or resistor for access. Can be used to reset the module to FACTORY DEFAULTS and is often critical in situations where the module has been mis-configured. To set Factory defaults: set pin HIGH, apply power, then toggle 4 times.

3. ***Connection status.*** PIO2 is an output which directly reflects the connection state, it goes HIGH when connected, and LOW otherwise.

4. **HCI mode.** The RN41-SM module must be loaded with special firmware to run in HCI mode. When in HCI mode the standard SPP/DUN applications are disabled.

5. **Shutdown mode.** Pin 9 Shutdown has a pullup to 3.3V. If you pull this pin LOW it shuts down the on board regulator putting the module in micropower mode. Shutdown also turns off the power to the RS-232 chip so you can hook the module to a battery and a remote microcontroller like a PIC you can go super low power, wake up connect send data go to sleep.

6. ***Minimizing Radio interference*** The areas under the antenna should not have surface traces, GND planes, or exposed vias,or metal enclosures for optimal radio performance the antenna

Compliance Information

Category	Country	Standard
Radio	**USA**	FCC CFR47 Part 15 C, para 15.247
	FCC ID:	T9J-R41-1
	EUROPE	EN 300 328-1
		EN 300 328-2 2.4GHz
	CANADA	IC RSS-210 low power comm. device
	IC Canada ID:	6514A-RN411
EMC	**USA**	FCC CFR47 Part 15 subclass B
	EUROPE	EN 55022 Class B radiated
		EN61000-4-2 ESD immunity
		EN61000-4-3 radiated field
		EN61000-4-6 RF immunity
		EN61000-4-8 power magnetic immunity
Bluetooth	**LISTED**	B013180
Environmental	**RoHS**	RoHS compliant

Ordering Information

Part Number	Description
RN-41-SM	Socket module with RN-41 (Class 1), No headers installed. Standard 3/5 V UART and RS232 interface, firmware (SPP/DUN Master and Slave)
RN-42-SM	Socket module with RN-42 (Class 2), No headers installed. Standard 3/5 V UART and RS232 interface, firmware (SPP/DUN Master and Slave)
For other configurations, contact Roving Networks directly.	

Visit http://www.rovingnetworks.com/buynow.php for current pricing and a list of distributors carrying our products.

Copyright © 2009 Roving Networks. All rights reserved.

The Bluetooth trademark and logo are registered trademarks and are owned by the Bluetooth SIG, Inc. All other trademarks are property of their respective owners.

Roving Networks reserves the right to make corrections, modifications, and other changes to its products, documentation and services at any time. Customers should obtain the latest relevant information before placing orders and should verify that such information is current and complete.

Roving Networks assumes no liability for applications assistance or customer product design. Customers are responsible for their products and applications using Roving Networks components. To minimize the risks associated with customer products and applications, customers should provide adequate design and operating safeguards.

Roving Networks products are not authorized for use in safety-critical applications (such as life support) where a failure of the Roving Networks product would reasonably be expected to cause severe personal injury or death, unless officers of the parties have executed an agreement specifically governing such use.