10/100/1000Base-T to 1000Base-SX/LX Smart Media Converter



To provide an easy use yet powerful solution for FTTX applications, PLANET has released a new 10/100/1000Base-T to 1000Base-SX/LX Smart Media Converter, GST-80x series, featuring plug & play and smart media conversion functions.

Distance Extension with High Performance and Steady Network Communication

PLANET GST-80x Smart Gigabit Media Converter series extends communication distance with highly Gigabit performance via fiber optical cable. The GST-80x series provides media conversion between 10/100/1000Base-T and 1000Base-SX/LX interfaces such as multi-mode LC/SC connectors (220m / 550m), single-mode LC/SC connectors (10/20/30/40/50/70/120km) and single fiber connectors (WDM,15/60km) for various fiber optic applications.

Enhanced Smart Management Features

The GST-80x series provides auto MDI/MDI-X on its TP port and the DIP switch to configure the available smart functions including the auto-negotiation / force for fiber interface and Link Pass-through function (LLCF/LLR). The Link Loss Carry Forward (LLCF) function works with Link Loss Return (LLR) to diagnose network connections. Also, the LLR function can immediately alarm network administrator the media link issue and provide efficient solution to monitoring the entire network.

Easy Installation

The GST-80x series allows two segments to connect easily. The Smart Media Converter can be used as a standalone unit when powered by its DC adapter or used as a slide-in module to PLANET 19-inch managed 16-slot media converter chassis (MC-1610MR / MC-1610MR48). When working with the Managed media converter chassis, the GST-80x is able to be managed and its status can be monitored through the local RS-232 console and remote web interface.

Standards

- Complies with IEEE 802.3 10Base-T, IEEE 802.3u 100Base-TX, IEEE 802.3ab 1000Base-T, IEEE 802.3z 1000Base-SX/LX Ethernet Standard

Interface

- One 10/100/1000Base-T port with RJ-45 connector
- One 1000Base-SX/LX port with LC/SC/WDM connector supporting multi-mode or single-mode fiber optic cable
- Auto-negotiation and Auto-MDI / MDI-X for 10/100/1000Base-T port

Layer 2 Features

- Back-pressure and IEEE 802.3x compliant flow control and full wire-speed forwarding rate
- 9K Jumbo Frame size supported
- Link Loss Return (LLR) switch on each fiber optic to aid in troubleshooting remote network connections
- Link Loss Carry Forward (LLCF) work with LLR in diagnosing network connections

Smart Management

- Provides DIP switch for fiber (Auto-negotiation / Manual) and LFP function (Disable / Enable) setting
- Manageable through / Managed Media Converter Chassis System (MC-1610MR series)
- Bandwidth control / TS-1000 OAM / IEEE 802.3ah OAM / Loop Back Test function provided with MC-1610MR / MC-1610MR48 Managed Media Converter Chassis System

Hardware

- Used as a stand-alone device or work with Managed Media Converter Chassis for up to 16 converter with redundant power supply for optional expansion use
- LED indicators for converter status
- Choice of fiber-connector from SC, LC, WDM, multi-mode / single-mode fiber / 1000Base-SX / LX mini GBIC module
- EMI standards complies with FCC, CE class A

Applications

Fiber-Optic Networking for ISP, Enterprise, and Home

PLANET GST-80x provides advanced media conversion technology -- 10/100/1000Base-T and 1000Base-SX/LX interfaces to fulfill different kinds of demands as the current network grows and expands. The GST-80x provides diverse fiber connect type options for different network applications. It is very flexible for the GST-80x to work as a standalone device or be installed in the central management media converter chassis for centralized management. When working with the management media converter chassis, the GST-80x is hot swappable to avoid network downtime. The GST-80x is the ideal solution to building a network solution of FTTH (Fiber to the Home) or FTTC (Fiber to the Curb), and FTTB (Fiber to the Building) for ISPs, campuses and enterprises.

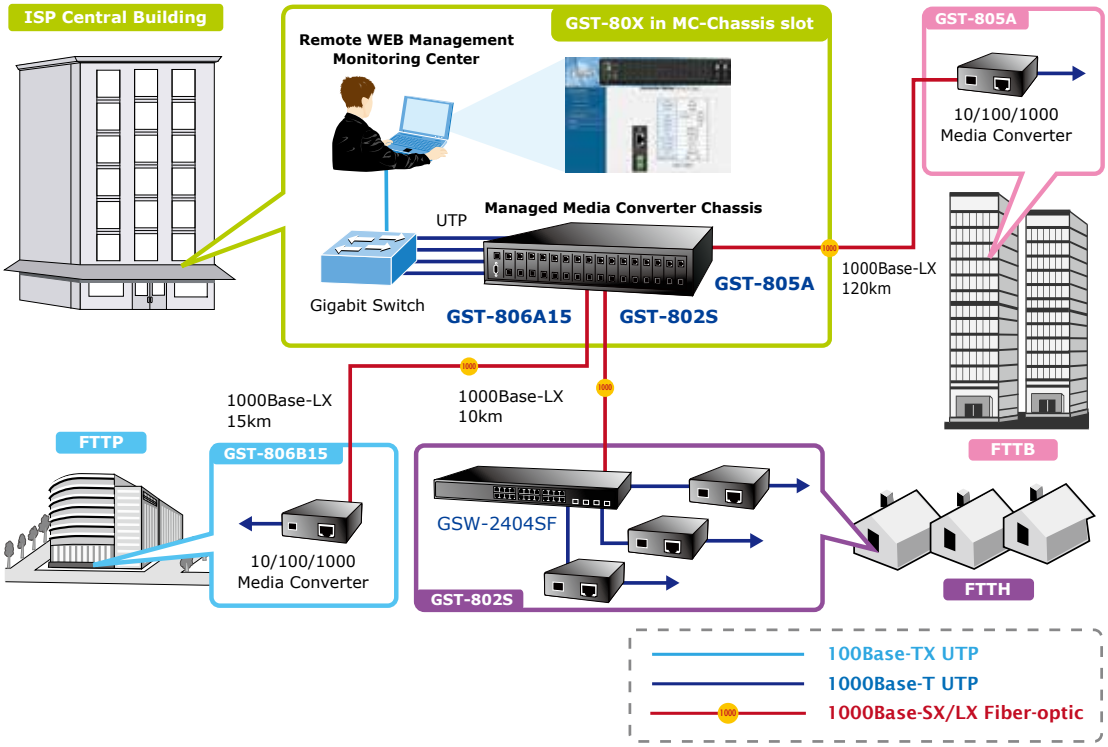

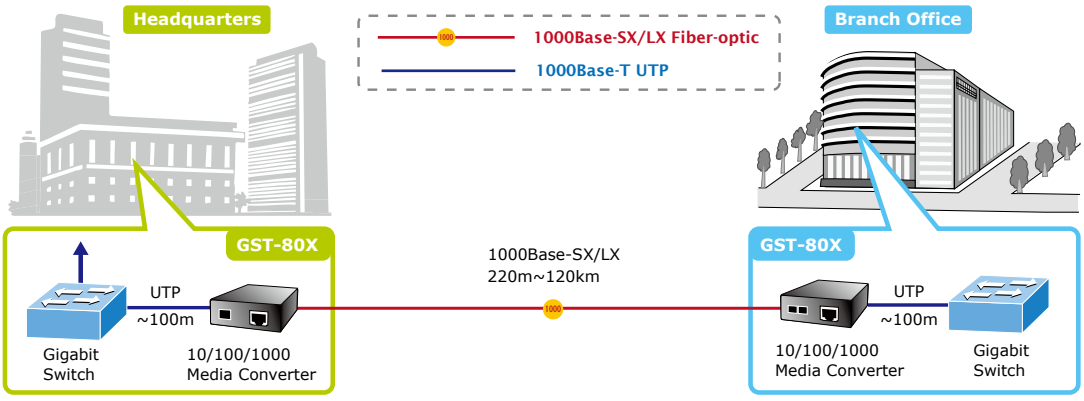

Specifications

Model	GST-802	GST-802S	GST-805A	GST-806A15	GST-806B15	GST-806A60	GST-806B60
Hardware Specifications							
Standards	IEEE 802.3, 10Base-T IEEE 802.3u, 100Base-TX IEEE 802.3ab, 1000Base-T IEEE 802.3z, 1000Base-SX/LX IEEE 802.3ah OAM						
Ports	1 x 10/100/1000Base-T port 1 x 1000Base-SX/LX port						
Copper Interface	RJ-45 port (Auto-MDI/MDI-X) Twisted Pair						
Optic Interface	GST-802 / GST-802S: SC GST-805A: SFP GST-806A15 / GST-806B15 / GST-806A60 / GST-806B60: WDM						
Optic Wavelength	GST-802: 850nm GST-802S: 1310nm GST-805A: N/A GST-806A15: TX:1310nm / RX:1550nm GST-806B15: TX:1550nm / RX:1310nm GST-806A60: TX:1310nm / RX:1550nm GST-806B60: TX:1550nm / RX:1310nm						
Launch Power(dBm) Max.	GST-802: -4 dBm GST-802S: -3 dBm GST-805A: N/A GST-806A15: -3 dBm GST-806B15: +5 dBm GST-806A60: -3 dBm GST-806B60: +4 dBm						
Launch Power(dBm) Min.	GST-802: -9.5 dBm GST-802S: -9.5dBm GST-805A: N/A GST-806A15: -9 dBm GST-806B15: 0 dBm GST-806A60: -9 dBm GST-806B60: -1 dBm						
Receive Sensitivity	GST-802: -13.5 dBm GST-802S: -14.4 dBm GST-805A: N/A GST-806A15: -21 dBm GST-806B15: -25 dBm GST-806A60: -21 dBm GST-806B60: -25 dBm						
Maximum Input power	GST-802: -18 dBm GST-802S: -20 dBm GST-805A: N/A GST-806A15: -3 dBm GST-806B15: -3 dBm GST-806A60: -2 dBm GST-806B60: -2 dBm						
Speed Twisted-pair	10/20Mbps for Half / Full-Duplex 100/200Mbps for Half / Full-Duplex 2000Mbps for Full-Duplex						
Speed Fiber-optic	2000Mbps for Full-Duplex						
Cable Twisted-pair	10Base-T: 2-pair UTP Cat. 3,4,5, up to 100m 100Base-TX: 2-pair UTP Cat. 5, up to 100m 1000Base-T: 4-pair STP Cat 5 up to 100m						
Cable Fiber-optic Cable	• 50/125μm or 62.5/125μm multi-mode fiber cable, up to 220/550m. • 9/125μm single-mode cable, provides long distance for 10/20/30/40/50/70/120km (vary on fiber transceiver or SFP module)						
LED Indicator	• PWR (Green) • TP: 1000, LINK/ACT • Fiber: LINK/ACT						
DIP Switch	Fiber (Auto-negotiation / Manual), LFP (Disable / Enable)						
Power Consumption	3.1 Watts / 10BTU (maximum)						
OAM	TS-1000, IEEE 802.3ah terminal						

Jumbo Frame size	9K
Power Input	DC 5V / 2A
Dimensions (W x D x H)	81 x 94 x 26 mm
Operating Environment	Temperature: 0~50 degrees C; Humidity: 5~90% non-condensing
Storage Environment	Temperature: -40~70 degrees C; Humidity: 5~90% non-condensing
Emissions	FCC Class A, CE Class A

Ordering Information

GST-802	10/100/1000Base-T to 1000Base-SX(SC,MM) Smart Media Converter-220m/550m
GST-802S	10/100/1000Base-T to 1000Base-LX(SC,SM) Smart Media Converter-10km
GST-805A	10/100/1000Base-T to 1000Base-LX/SX(mini-GBIC, SFP) Smart Media Converter-distance depends on SFP module
GST-806A15	10/100/1000Base-T to 1000Base-LX(WDM) Smart Media Converter-TX:1310nm-15km
GST-806B15	10/100/1000Base-T to 1000Base-LX(WDM) Smart Media Converter-TX:1550nm-15km
GST-806A60	10/100/1000Base-T to 1000Base-LX(WDM) Smart Media Converter-TX:1310nm-60km
GST-806B60	10/100/1000Base-T to 1000Base-LX(WDM) Smart Media Converter-TX:1550nm-60km

Related SFP modules for GST-805A

MGB-SX	SFP-Port 1000Base-SX Transceiver, LC, MM-550m
MGB-LX	SFP-Port 1000Base-LX Transceiver, LC, SM-10km
MGB-L30	SFP-Port 1000Base-LX Transceiver, LC, SM-30km
MGB-L50	SFP-Port 1000Base-LX Transceiver, LC, SM-50km
MGB-L70	SFP-Port 1000Base-LX Transceiver, LC, SM-70km
MGB-L120	SFP-Port 1000Base-LX Transceiver, LC, SM-120km
MGB-LA10	1000Base-LX Transceiver, LC, WDM (TX:1310nm) SM-10km
MGB-LB10	1000Base-LX Transceiver, LC, WDM (TX:1550nm) SM-10km
MGB-LA20	1000Base-LX Transceiver, LC, WDM (TX:1310nm) SM-20km
MGB-LB20	1000Base-LX Transceiver, LC, WDM (TX:1550nm) SM-20km
MGB-LA40	1000Base-LX Transceiver, LC, WDM (TX:1310nm) SM-40km
MGB-LB40	1000Base-LX Transceiver, LC, WDM (TX:1550nm) SM-40km

Related products

MC-1610MR / MC-1610MR48	16-Slot Managed Media Converter Chassis with Redundant Power Supply System

PLANET Technology Corporation

11F., No.96, Minquan Rd., Xindian Dist., New Taipei City 231, Taiwan (R.O.C.)
Tel: 886-2-2219-9518 Fax: 886-2-2219-9528
Email: sales@planet.com.tw www.planet.com.tw

PLANET reserves the right to change specifications without prior notice. All brand names and trademarks are property of their respective owners. Copyright © 2014 PLANET Technology Corp. All rights reserved.