PRODUCT DATASHEET
Mirella series
last update 19/9/2014

DETAILS



Product Number	C13333_MIRELLA-CL
Family	Mirella
Type	Sublens
Color	clear
Diameter	41 mm
Height	3.4 mm
Style	round
Optic Material	PC
Holder Material	
Fastening	
Status	ready
ROHS Comliant	Yes
Date Updated	19/09/2014

OPTICAL PROPERTIES

LED	Viewing Angle	Light Beam	Effi-ciency	cd/lm	Connector
	N/A deg		-	sim: 0.000	-

Ledil Oy
Salorankatu 10
24240 SALO, Finland

http://www.ledil.com
email: ledil@ledil.com
FAX: +358-2-733 8001

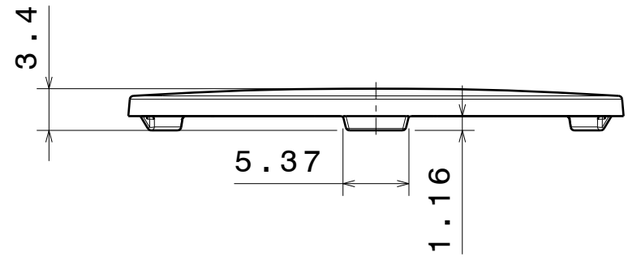

Front view

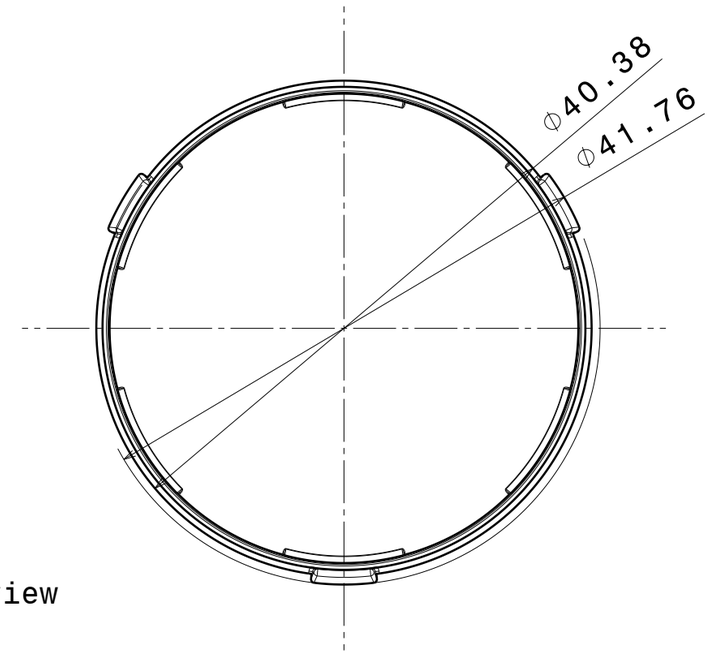

Bottom view

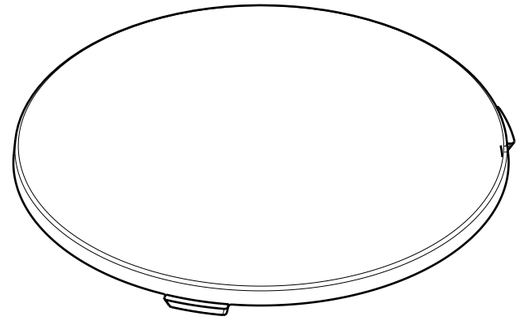

Isometric view

INDEX	PART NO	DESCRIPTION	MATERIAL	COLOUR
1	C13333	MIRELLA-CL	PC	clear

Tolerances if not otherwise shown
According to DIN ISO 2768-1
Linear measures: class C
According to DIN ISO 2768-2
Form and position: class L

Ledil Oy
Salorankatu 10
FIN 24240 SALO
Finland

THIRD ANGLE PROJECTION:

This drawing is the property of LEDiL Oy. It may not be reproduced, copied or communicated without a written agreement with LEDiL Oy.

DRAWING TITLE
C13333_MIRELLA-CL

SIZE A3

PART NUMBER
C13333

SCALE 2:1 | WEIGHT 2,94 g | SHEET 1/1

NOTE: The typical divergence will be changed by different color, chip size and chip position tolerance. The typical total divergence is the full angle measured where the luminous intensity is half of the peak value.