AMGIS

CA Series • Common Mode Toroidal Chokes

CA Series common mode toroidal chokes provide an efficient means of filtering supply lines having in-phase signals of equal amplitude thus allowing equipment to meet stringent electrical radiation specifications. Wide frequency ranges can be filtered by using high and low inductance Common Mode toroids in series. Differential mode signals can be attenuated substantially when used together with input and output capacitors.



Features

- Separated windings for minimum capacitance
- Meets requitements of EN138100, VDE 0565, part2: 1997-03 and UL1283
- Competitive pricing due to high volume production
- Manufactured in ISO-9001:2000, TS-16949:2002 and ISO-14001:2004 certified facility
- Fully RoHS compliant

AMGIS, LLC Compliance RoHS

Electrical Specifications @ 25°C

Test frequency: Inductance measured at 0.10VAC @ 10kHz
Test voltage between windings: 1,500 VAC for 60 seconds
Operating temperature: -40°C to +125°C
Climatic category: IEC68-1 40/125/56

Part Number	I_{DC} Amp	L_O(mH) ±30% (2x)	DCR mOhm (2x)	Coil Size O.D. x Ht. (Nominal)	Mtg. Style Size		
					B	V / X	F
CA__-0.4-100	0.4	100	2,807	18 x 7	3	3	3
CA__-0.5-100	0.5	100	2,044	23 x 11	5	4	4
CA__-0.6-100	0.6	100	1,543	29 x 13	5	4A	6
CA__-1.4-100	1.4	100	484	35 x 16	8	9	9
CA__-0.4-82	0.4	82	1,167	15 x 8	3	3	3
CA__-0.5-82	0.5	82	1,851	23 x 11	5	4	4
CA__-0.6-82	0.6	82	1,397	29 x 13	5	4A	6
CA__-1.6-82	1.6	82	350	35 x 16	8	9	9
CA__-0.3-68	0.3	68	3,692	15 x 8	3	2	2
CA__-0.5-68	0.5	68	1,853	18 x 7	3	3	3
CA__-0.6-68	0.6	68	1,353	23 x 11	5	4	4
CA__-0.7-68	0.7	68	1,108	29 x 13	5	4A	6
CA__-1.8-68	1.8	68	277	35 x 16	8	9	9
CA__-0.3-56	0.3	56	3,126	14 x 8	3	2	2
CA__-0.5-56	0.5	56	1,518	18 x 7	3	3	3
CA__-0.6-56	0.6	56	1,378	23 x 11	5	4	4
CA__-0.8-56	0.8	56	807	29 x 13	5	4A	6
CA__-2.0-56	2.0	56	228	35 x 16	8	9	9
CA__-0.4-47	0.4	47	1,942	14 x 8	3	2	2
CA__-0.5-47	0.5	47	1,390	18 x 7	3	3	3
CA__-0.6-47	0.6	47	1,001	23 x 11	5	4	4
CA__-0.9-47	0.9	47	658	29 x 13	5	4A	6
CA__-2.2-47	2.2	47	185	35 x 16	8	9	9
CA__-0.4-39	0.4	39	1,769	14 x 8	3	2	2
CA__-0.5-39	0.5	39	1,267	18 x 7	3	3	3
CA__-0.6-39	0.6	39	912	23 x 11	5	4	4
CA__-1.0-39	1.0	39	537	29 x 13	5	4A	6
CA__-2.5-39	2.5	39	150	36 x 17	8	9	9
CA__-0.4-33	0.4	33	1,628	14 x 8	3	2	2
CA__-0.6-33	0.6	33	837	18 x 7	3	3	3
CA__-0.7-33	0.7	33	751	23 x 11	5	4	4
CA__-1.1-33	1.1	33	434	29 x 13	5	5	6
CA__-2.7-33	2.7	33	124	36 x 17	8	9	9

Part Number	I_{DC} Amp	L_O (mH) ±30% (2x)	DCR mOhm (2x)	Coil Size O.D. x Ht. (Nominal)	Mtg. Style Size		
					B	V / X	F
CA__-0.5-27	0.5	27	1,179	14 x 8	3	2	2
CA__-0.8-27	0.8	27	674	18 x 7	3	3	3
CA__-1.0-27	1.0	27	537	23 x 11	5	4	4
CA__-1.4-27	1.4	27	279	30 x 14	5	4A	6
CA__-3.2-27	3.2	27	87	37 x 17	8	9	9
CA__-0.5-22	0.5	22	960	14 x 8	3	2	2
CA__-0.9-22	0.9	22	542	18 x 7	3	3	3
CA__-1.0-22	1.0	22	485	23 x 11	5	4	4
CA__-1.5-22	1.5	22	227	30 x 14	5	4A	6
CA__-3.6-22	3.6	22	70	37 x 17	8	9	9
CA__-0.6-18	0.6	18	868	14 x 8	3	2	2
CA__-1.0-18	1.0	18	439	18 x 7	3	3	3
CA__-1.1-18	1.1	18	388	23x 11	5	4	4
CA__-1.6-18	1.6	18	205	30 x 14	5	4A	6
CA__-3.9-18	3.9	18	57	36 x 17	8	9	9
CA__-0.6-15	0.6	15	793	14 x 8	3	2	2
CA__-1.0-15	1.0	15	401	18 x 7	3	3	3
CA__-1.2-15	1.2	15	315	23 x 11	5	4	4
CA__-1.8-15	1.8	15	167	30 x 14	5	4A	6
CA__-4.3-15	4.3	15	47	36 x 17	8	9	9
CA__-0.7-12	0.7	12	709	14 x 8	3	2	2
CA__-1.1-12	1.1	12	358	18 x 7	3	3	3
CA__-1.4-12	1.4	12	253	23 x 11	5	4	4
CA__-1.9-12	1.9	12	149	30 x 13	5	4A	6
CA__-4.9-12	4.9	12	37	36 x 17	8	9	9
CA__-0.7-10	0.7	10	647	14 x 8	3	2	2
CA__-1.2-10	1.2	10	285	18 x 7	3	3	3
CA__-1.6-10	1.6	10	203	23 x 11	5	4	4
CA__-2.0-10	2.0	10	136	29 x 13	5	4A	6
CA__-5.0-10	5.0	10	34	36 x 17	8	9	9
CA__-1.1-6.8	1.1	6.8	342	14 x 8	3	2	2
CA__-1.3-6.8	1.3	6.8	235	18 x 7	3	3	3
CA__-2.0-6.8	2.0	6.8	148	23 x 11	5	4	4
CA__-2.6-6.8	2.6	6.8	79	30 x 13	5	4A	6
CA__-5.5-6.8	5.5	6.9	28	35 x 16	8	9	9

AMGIS, LLC * 10830 Kinghurst Dr. Houston, TX 77099
Phone: 832-775-1319 * Fax: 281-933-9067* email: sales@amgistoroids.com
Toll Free: 877-762-6447 * www.amgistoroids.com

CA Series • Common Mode Toroidal Chokes

Part Number	I_{DC} Amp	L_O(mH) ±30% (2x)	DCR mOhm (2x)	Coil Size O.D. x Ht. (Nominal)	Mtg. Style Size		
					B	V / X	F
CA__-1.2-5.6	1.2	5.6	276	14 x 8	3	2	2
CA__-1.5-5.6	1.5	5.6	193	18 x 7	3	3	3
CA__-2.0-5.6	2.0	5.6	120	23 x 11	5	4	4
CA__-2.8-5.6	2.8	5.6	72	29 x 13	5	4A	6
CA__-5.9-5.6	5.9	5.6	26	35 x 16	8	9	9
CA__-1.2-4.7	1.2	4.7	253	14 x 8	3	2	2
CA__-1.6-4.7	1.6	4.7	110	18 x 7	3	3	3
CA__-1.9-4.7	1.9	4.7	99	23 x 11	5	4	4
CA__-3.0-4.7	3.0	4.7	58	29 x 13	5	5	6
CA__-6.2-4.7	6.2	4.7	23	34 x 15	8	9	9
CA__-1.3-3.9	1.3	3.9	230	14 x 8	3	2	2
CA__-1.8-3.9	1.8	3.9	100	18 x 7	3	3	3
CA__-2.1-3.9	2.1	3.9	81	23 x 11	5	4	4
CA__-3.5-3.9	3.5	3.9	42	30 x 14	5	5	6
CA__-6.8-3.9	6.8	3.9	19	34 x 15	8	9	9
CA__-1.5-3.3	1.5	3.3	165	14 x 8	3	2	2
CA__-2.0-3.3	2.0	3.3	92	18 x 7	3	3	3
CA__-3.0-3.3	3.0	3.3	52	23 x 11	5	4	4
CA__-4.0-3.3	4.0	3.3	34	30 x 14	5	5	6
CA__-7.5-3.3	7.5	3.3	16	34 x 15	8	9	9
CA__-1.5-2.7	1.5	2.7	172	14 x 8	3	2	2
CA__-2.2-2.7	2.2	2.7	83	18 x 7	3	3	3
C A__-3.5-2.7	3.5	2.7	47	23 x 11	5	4	4
CA__-4.8-2.7	4.8	2.7	22	30 x 14	5	5	6
CA__-7.8-2.7	7.8	2.7	14	34 x 15	8	9	9
CA__-1.6-2.2	1.6	2.2	135	14 x 7	3	2	2
CA__-2.3-2.2	2.3	2.2	75	18 x 7	3	3	3
CA__-4.0-2.2	4.0	2.2	30	23 x 11	5	4	4
CA__-5.8-2.2	5.8	2.2	16	31 x 15	5	5	6
CA__-8.2-2.2	8.2	2.2	13	34 x 15	8	9	9
CA__-1.6-1.8	1.6	1.8	111	14 x 8	3	2	2
CA__-2.5-1.8	2.5	1.8	60	18 x 7	3	3	3
CA__-4.5-1.8	4.5	1.8	27	23 x 11	5	4	4
CA__-6.0-1.8	6.0	1.8	14	30 x 14	5	5	6
CA__-8.7-1.8	8.7	1.8	12	34 x 15	8	9	9
CA__-1.8-1.5	1.8	1.5	89	14 X 8	3	2	2
CA__-2.8-1.5	2.8	1.5	49	18 X 7	3	3	3
CA__-5.0-1.5	5.0	1.5	22	23 X 11	5	4	4
CA__-7.0-1.5	7.0	1.5	11	31 X 15	5	5	6
CA__-9.1-1.5	9.1	1.5	11	33 x 14	8	9	9

Part Number	I_{DC} Amp	L_O(mH) ±30% (2x)	DCR mOhm (2x)	Coil Size O.D. x Ht. (Nominal)	Mtg. Style Size		
					B	V / X	F
CA__-1.9-1.2	1.9	1.2	71	14 X 8	3	2	2
CA__-3.1-1.2	3.1	1.2	44	18 X 7	3	3	3
CA_--5.0-1.2	5.0	1.2	20	23 X 11	5	4	4
CA__-7.5-1.2	7.5	1.2	10	30 X 41	5	5	6
CA__-9.6-1.2	9.6	1.2	10	33 x 14	8	9	9
CA__-2.0-1.0	2.0	1.0	65	14 X 8	3	2	2
CA__-3.5-1.0	3.5	1.0	32	18 X 6	3	3	3
CA__-5.0-1.0	5.0	1.0	18	23 X 11	5	4	4
CA__-7.8-1.0	7.8	1.0	9	30 X 14	5	5	6
CA__-10-1.0	10	1.0	9	33 x 14	8	9	9
CA__-2.8-0.68	2.8	0.68	37	14 X 8	3	2	2
CA__-4.2-0.68	4.2	0.68	21	18 X 7	3	3	3
CA__-6.0-0.68	6.0	0.68	13	23 X 11	5	4	4
CA__-8.5-0.68	8.5	0.68	7	30 X 14	5	4A	6
CA__-11-0.68	11	0.68	7	33 x 14	8	9	9
CA__-3.6-0.47	3.6	0.47	28	14 X 8	3	2	2
CA__-6.0-0.47	6.0	0.47	11	18 X 7	3	3	3
CA__-7.0-0.47	7.0	0.47	10	23 X 11	5	4	4
CA__-9.5-0.47	9.5	0.47	6	29 X 13	5	5	6
CA__-12-0.47	12	0.47	6	32 x 13	8	9	9
CA__-3.2-0.33	3.2	0.33	17	14 X 8	3	2	2
CA__-6.1-0.33	6.1	0.33	7	18 X 6	3	3	3
CA__-7.2-0.33	7.2	0.33	7	23 X 11	5	4	4
CA__-10-0.33	10	0.33	5	29 X 13	5	4A	6
CA__-13-0.33	13	0.33	5	32 x 13	8	9	9
CA__-3.7-0.22	3.7	0.22	12	14 X 8	3	2	2
CA__-7.6-0.22	7.6	0.22	5	18 X 7	3	3	3
CA__-8.9-0.22	8.9	0.22	4	23 X 11	5	4	4
CA__-11-0.22	11	0.22	4	29 X 12	5	5	6
CA__-13-0.22	13	0.22	4	32 x 13	8	9	9
CA__-4.6-0.15	4.6	0.15	8	14 X 8	3	2	2
CA__-9.3-0.15	9.3	0.15	3	18 X 7	3	3	3
CA__-10-0.15	10	0.15	3	23 X 11	5	4	4
CA__-12-0.15	12	0.15	3	29 X 12	5	5	6
CA__-16-0.15	16	0.15	3	32 x 13	8	9	9
CA__-5.7-0.10	5.7	0.10	5	14 X 8	3	2	2
CA__-10-0.10	10	0.10	2	18 X 7	3	3	3
CA__-12-0.10	12	0.10	2	22 X 11	5	4	4
CA__-13-0.10	13	0.10	3	28 X 12	5	5	6
CA__-17-0.10	17	0.10	3	32 X 13	8	9	9

AMGIS Engineering staff can assist in the design of other inductance values and sizes.

Notes:

1) Inductance measured at 25°C and 10 kHz.
   L < 2mH test level < 2.5mA
   L > 2mH test ;evel < 250mV
2) Inductance loss <10% by DC preload with I_N (current compensated).
3) DC Resistance measured at 25°C ±5°C.
4) Test voltage per VDE 0565/2
5) 250 VAC Nominal Operating Voltage
6) Maximum Ambient Temperature: 60°C

Ordering Key

CA B - 0.5 - 10mH

- 10mH — Inductance Value per Winding
- 0.5 — Current Rating (Amps)
- B — Mounting Style
  - O = Open: 'OV' - Vertical & 'OH' - Horizontal Mount
  - B = Base Mount
  - V = Vertical Encapsulated - Pins 7 - 2 and 6 - 3
  - X = Vertical Encapsulated - Pins 8 - 1 and 5 - 4
  - F = Flat Encapsulated
- CA — Basic Series Designation

AMGIS, LLC * 10830 Kinghurst Dr. Houston, TX 77099
Phone: 832-775-1319 * Fax: 281-933-9067* email: sales@amgistoroids.com
Toll Free: 877-762-6447 * www.amgistoroids.com

Mounting Style • CA Series •

Open Style

Style 'OV' - Vertical Mount

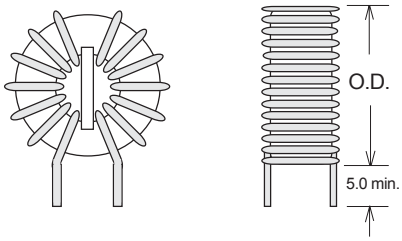

Style 'OH' - Horizontal Mount

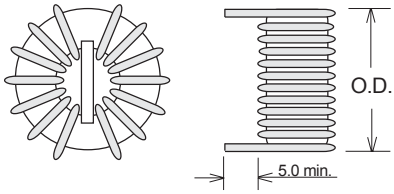

Type B - Base Mount

Type B- I

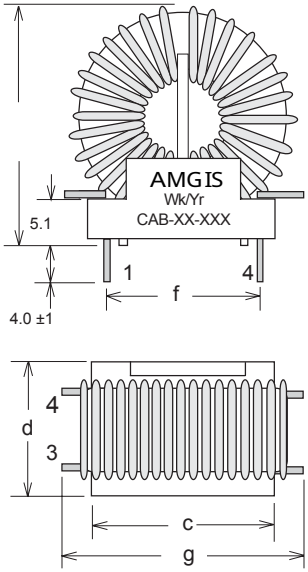

Type B-II

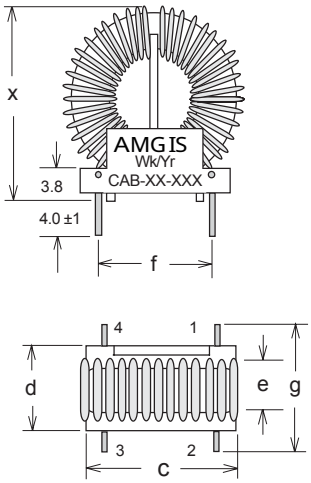

Flat Mount

TypeF

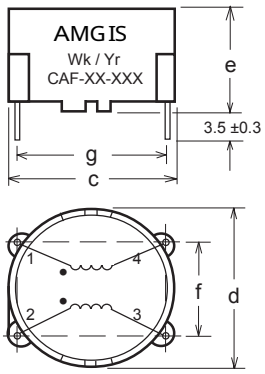

Vertical Mount

TypeV

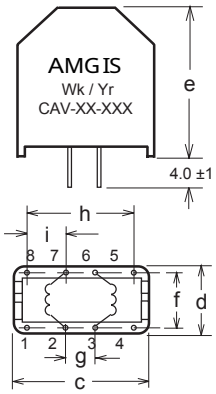

TypeX

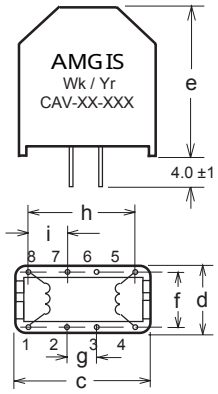

Size4A

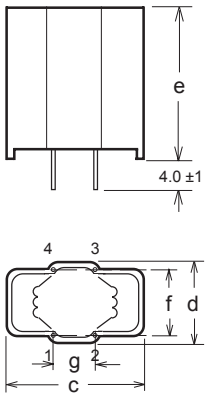

Mounting Style		Size Code	Dimensions Nominal (mm)								
			c	d	e	f	g	h	i	x	Pin Ø
Base Mount	B- I I	3	19.1	10.8	6.4	15.2	15.9	--	--	Coil O.D. + 3.8	1.02
	B- I	5	25.4	16.0	10.2	20.3	34.3	--	--	Coil O.D. + 3.5	1.27
		8	27.9	20.3	15.2	22.9	36.8	--	--		
Vertical Mount	"V" Pins 7-2 & 6-3	2	17.8	12.8	20.0	10.0	5.0	15.0	5.0	--	0.60 x 0.88
		3	23.0	15.5	25.0	12.5	10.0	20.0	5.0	--	
	"X" Pins 8-1 & 5-4	4	27.0	18.0	30.0	15.0	12.5	22.5	5.0	--	0.60 x 0.88
		4A	32.5	18.0	35.0	15.0	12.5	--	--	--	
		5	32.0	20.5	35.0	17.5	12.5	27.5	7.5	--	0.75 x 1.10
		9	43.0	28.0	47.5	25.0	25.0	40.0	7.5	--	
Flat Mount	F	2	17.5	17.0	12.5	10.0	15.0	--	--	--	0.60 x 0.88
		3	22.5	22.0	15.0	12.5	20.0	--	--	--	
		4	27.5	27.0	17.5	15.0	25.0	--	--	--	0.60 x 0.88
		6	32.5	32.0	20.0	20.0	30.0	--	--	--	
		9	42.5	42.0	28.5	25.0	35.0	--	--	--	0.60 x 0.88

AMGIS, LLC * 10830 Kinghurst Dr. Houston, TX 77099
Phone: 832-775-1319 * Fax: 281-933-9067* email: sales@amgistoroids.com
Toll Free: 877-762-6447 * www.amgistoroids.com