Bluetooth® and Dual-Mode Controller

1 *Bluetooth* and Dual-Mode Controller

1.1 Features

- Single-Chip *Bluetooth* Solution Integrating *Bluetooth* Basic Rate (BR)/Enhanced Data Rate (EDR)/Low Energy (LE) Features Fully Compliant With the *Bluetooth* 4.0 Specification Up to the HCI Layer
- BR/EDR Features Include:
  - Up to 7 Active Devices
  - Scatternet: Up to 3 Piconets Simultaneously, 1 as Master and 2 as Slaves
  - Up to 2 SCO Links on the Same Piconet
  - Support for All Voice Air-Coding – Continuously Variable Slope Delta (CVSD), A-Law, μ-Law, and Transparent (Uncoded)
- CC2560B/CC2564B Devices Provide an Assisted Mode for HFP 1.6 Wideband Speech (WBS) Profile or A2DP Profile to Reduce Host Processing and Power
- LE Features Include:
  - Support of Up to 10 (CC2564 and CC2564B) Simultaneous Connections
  - Multiple Sniff Instances Tightly Coupled to Achieve Minimum Power Consumption
  - Independent Buffering for LE Allows Large Numbers of Multiple Connections Without Affecting BR/EDR Performance.
  - Built-In Coexistence and Prioritization Handling for BR/EDR and LE
- Flexibility for Easy Stack Integration and Validation Into Various Microcontrollers, Such as MSP430™ and ARM® Cortex™-M3 and Cortex™-M4 MCUs
- Highly Optimized for Low-Cost Designs:
  - Single-Ended 50-Ω RF Interface
  - Package Footprint: 76 Pins, 0.6-mm Pitch, 8.10-mm x 8.10-mm mrQFN
- Best-in-Class *Bluetooth* (RF) Performance (TX Power, RX Sensitivity, Blocking)
  - Class 1.5 TX Power Up to +12 dBm
  - Internal Temperature Detection and Compensation to Ensure Minimal Variation in RF Performance Over Temperature, No External Calibration Required
  - Improved Adaptive Frequency Hopping (AFH) Algorithm With Minimum Adaptation Time
  - Provides Longer Range, Including 2x Range Over Other BLE-Only Solutions
  - ROM Spin to Enable Offload Host and Save Current With Assisted Audio (SBC Encode and Decode On Chip)
- Advanced Power Management for Extended Battery Life and Ease of Design:
  - On-Chip Power Management, Including Direct Connection to Battery
  - Low Power Consumption for Active, Standby, and Scan *Bluetooth* Modes
  - Shutdown and Sleep Modes to Minimize Power Consumption
- Physical Interface:
  - Fully Programmable Digital PCM-I2S Codec Interface
- CC256x *Bluetooth* Hardware Evaluation Tool: PC-Based Application to Evaluate RF Performance of the Device and Configure Service Pack
- Device Pin-to-Pin Compatible With Previous Devices or Modules

Please be aware that an important notice concerning availability, standard warranty, and use in critical applications of Texas Instruments semiconductor products and disclaimers thereto appears at the end of this data sheet.

MSP430, DRP are trademarks of Texas Instruments.
Cortex is a trademark of ARM Limited.
ARM7TDMIE is a registered trademark of ARM Limited.
ARM is a registered trademark of ARM Physical IP, Inc.
iPod is a registered trademark of Apple, Inc.
Bluetooth is a registered trademark of Bluetooth SIG, Inc.

PRODUCTION DATA information is current as of publication date. Products conform to specifications per the terms of the Texas Instruments standard warranty. Production processing does not necessarily include testing of all parameters.

Copyright © 2012–2014, Texas Instruments Incorporated

1.2 Applications

- **Mobile phone accessories**
- **Sports and fitness applications**
- **Wireless audio solutions**
- **Remote controls**
- **Toys**

1.3 Description

The TI CC256x device is a complete *Bluetooth* BR/EDR/LE HCI solution that reduces design effort and enables fast time to market. Based on TI's seventh-generation *Bluetooth* core, the CC256x device provides a product-proven solution that supports *Bluetooth* 4.0 dual-mode (BR/EDR/LE) protocols. When coupled with a microcontroller unit (MCU), the HCI device provides best-in-class RF performance.

TI's power-management hardware and software algorithms provide significant power savings in all commonly used *Bluetooth* BR/EDR/LE modes of operation.

With transmit power and receive sensitivity, this solution provides a best-in-class range of about 2x, compared to other BLE-only solutions. A royalty-free software *Bluetooth* stack available from TI is pre-integrated with TI's MSP430 and ARM Cortex-M3 and Cortex-M4 MCUs. The stack is also available for made for iPod® (MFi) solutions and on other MCUs through TI's partner Stonestreet One (www.stonestreetone.com). Some of the profiles supported today include: serial port profile (SPP), advanced audio distribution profile (A2DP), human interface device (HID), and several BLE profiles (these profiles vary based on the supported MCU).

In addition to software, this solution consists of multiple reference designs with a low BOM cost, including a new *Bluetooth* audio sink reference design for customers to create a variety of applications for low-end, low-power audio solutions. For more information on TI's wireless platform solutions for *Bluetooth*, see TI's Wireless Connectivity Wiki (processors.wiki.ti.com/index.php/CC256x).

Table 1-1 lists the CC256x family members.

Table 1-1. CC256x Family Members

Module	Description	Technology Supported			Assisted Modes Supported(1)	
		BR/EDR	LE	ANT	HFP 1.6 (WBS)	A2DP
CC2560A	*Bluetooth* 4.0 (with EDR)	√				
CC2564(2)	*Bluetooth* 4.0 + BLE	√	√			
	Bluetooth 4.0 + ANT	√		√		
CC2560B	*Bluetooth* 4.0 (with EDR)	√			√	√
CC2564B(2)	*Bluetooth* 4.0 + BLE	√	√		√	√
	Bluetooth 4.0 + ANT	√		√	√	√

(1) The assisted modes (HFP 1.6 and A2DP) are not supported simultaneously. Furthermore, the assisted modes are not supported simultaneously with BLE or ANT.
(2) The device does not support simultaneous operation of LE and ANT.

Copyright © 2012–2014, Texas Instruments Incorporated

1.4 Functional Block Diagram

Figure 1-1 shows the device block diagram.

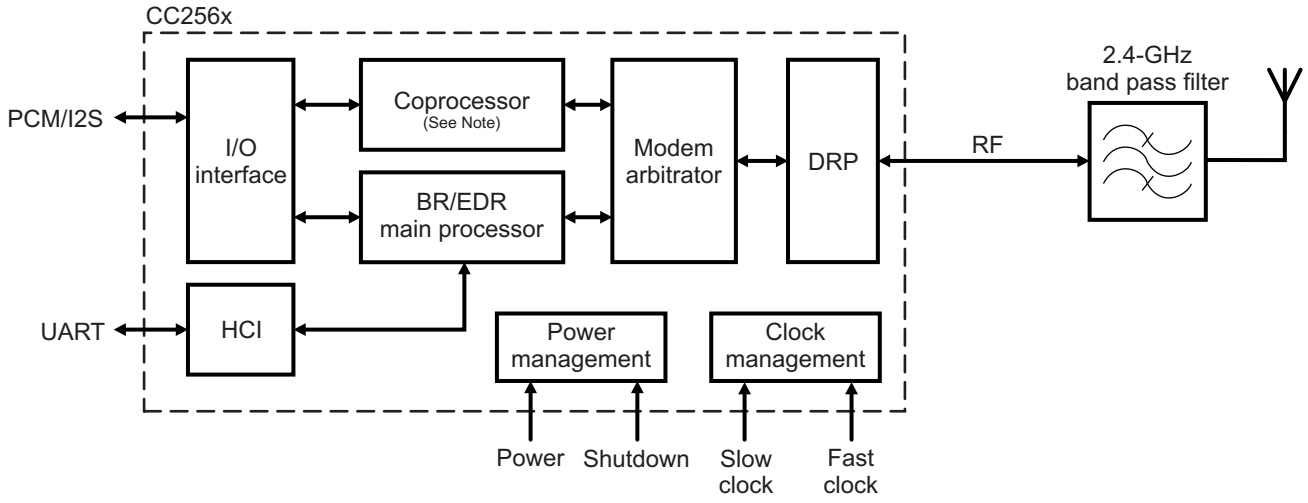

Note: The following technologies and assisted modes cannot be used simultaneously with the coprocessor: LE, ANT, assisted HFP 1.6 (WBS), and assisted A2DP. One and only one technology or assisted mode can be used at a time.

Figure 1-1. Functional Block Diagram

1 *Bluetooth* and Dual-Mode Controller 1
1.1 Features 1
1.2 Applications 2
1.3 Description 2
1.4 Functional Block Diagram 3
Revision History 4
2 *Bluetooth* 5
2.1 BR/EDR Features 5
2.2 LE Features 5
2.3 Changes from CC2560A and CC2564 to CC2560B and CC2564B Devices 6
2.4 Transport Layers 6
3 Detailed Description 7
3.1 Pin Designation 7
3.2 Terminal Functions 8
3.3 Device Power Supply 10
3.4 Clock Inputs 12
3.5 Functional Blocks 15
4 Device Specifications 27
4.1 General Device Requirements and Operation 27
4.2 *Bluetooth* BR/EDR RF Performance 31
4.3 *Bluetooth* LE RF Performance 33
4.4 Interface Specifications 34
5 Reference Design and BOM for Power and Radio Connections 37
6 mrQFN Mechanical Data 38
7 Chip Packaging and Ordering 40
7.1 Package and Ordering Information 40
7.2 Empty Tape Portion 41
7.3 Device Quantity and Direction 41
7.4 Insertion of Device 41
7.5 Tape Specification 42
7.6 Reel Specification 42
7.7 Packing Method 42
7.8 Packing Specification 43

Copyright © 2012–2014, Texas Instruments Incorporated

Revision History

NOTE: Page numbers for previous revisions may differ from page numbers in the current version.

Changes from Revision C (August 2013) to Revision D:

Version	Literature Number	Date	Notes
D	SWRS121	January 2014	See (1).

(1) Sections impacted by changes between version C and version D:
- Features: Changed support of simultaneous connections for CC2564 variant from 6 to 10.
- Features: Added reference to ROM spin.
- Features: Added reference to H5 protocol (2-wire) support.
- Features: Added reference to pin-to-pin compatibility with previous devices and modules.
- Features: Removed references to the following physical interfaces: HCI over H4 UART and HCI over H5 UART.
- Description: Added reference to multiple reference designs capability, including *Bluetooth* audio sink.

Copyright © 2012–2014, Texas Instruments Incorporated

2 *Bluetooth*

2.1 BR/EDR Features

The CC256x device fully complies with the *Bluetooth* 4.0 specification up to the HCI level (for the family members and technology supported, see Table 1-1):

- Up to seven active devices
- Scatternet: Up to 3 piconets simultaneously, 1 as master and 2 as slaves
- Up to two synchronous connection oriented (SCO) links on the same piconet
- Very fast AFH algorithm for asynchronous connection-oriented link (ACL) and extended SCO (eSCO) link
- Supports typically 12-dBm TX power without an external power amplifier (PA), thus improving *Bluetooth* link robustness
- Digital radio processor (DRP™) single-ended 50-Ω I/O for easy RF interfacing
- Internal temperature detection and compensation to ensure minimal variation in RF performance over temperature
- Flexible pulse-code modulation (PCM) and inter-IC sound (I2S) digital codec interface:
  - Full flexibility of data format (linear, A-Law, μ-Law)
  - Data width
  - Data order
  - Sampling
  - Slot positioning
  - Master and slave modes
  - High clock rates up to 15 MHz for slave mode (or 4.096 MHz for master mode)
- Support for all voice air-coding
  - CVSD
  - A-Law
  - μ-Law
  - Transparent (uncoded)
- The CC2560B and CC2564B devices provide an assisted mode for the HFP 1.6 (wide-band speech [WBS]) profile or A2DP profile to reduce host processing and power.

2.2 LE Features

The device fully complies with the *Bluetooth* 4.0 specification up to the HCI level (for the family members and technology supported, see Table 1-1):

- Supports all roles defined by the *Bluetooth* v4.0 specifications
- Solution optimized for proximity and sports use cases
- Supports up to 10 (CC2564 or CC2564B) simultaneous connections
- Multiple sniff instances that are tightly coupled to achieve minimum power consumption
- Independent buffering for LE, allowing large numbers of multiple connections without affecting BR/EDR performance.
- Includes built-in coexistence and prioritization handling for BR/EDR and LE

NOTE

ANT and the assisted modes (HFP 1.6 and A2DP) are not available when BLE is enabled.

Copyright © 2012–2014, Texas Instruments Incorporated

2.3 Changes from CC2560A and CC2564 to CC2560B and CC2564B Devices

The CC2560B and CC2564B devices include the following changes from the CC2560A and CC2564 devices:

- From a hardware perspective, both devices are pin compatible. From a software perspective, each device requires a different service pack. When operating with the two devices using the supported *Bluetooth* stack, the devices are integrated seamlessly and use remains identical for each device.
- Assisted mode for the HFP 1.6 (WBS) profile or the A2DP profile to enable more advanced features without using host processing or power
- Support for the H5 protocol in the UART transport layer using 2-wire UART
- Enable 10 *Bluetooth* LE connections

2.4 Transport Layers

Figure 2-1 shows the *Bluetooth* transport layers.

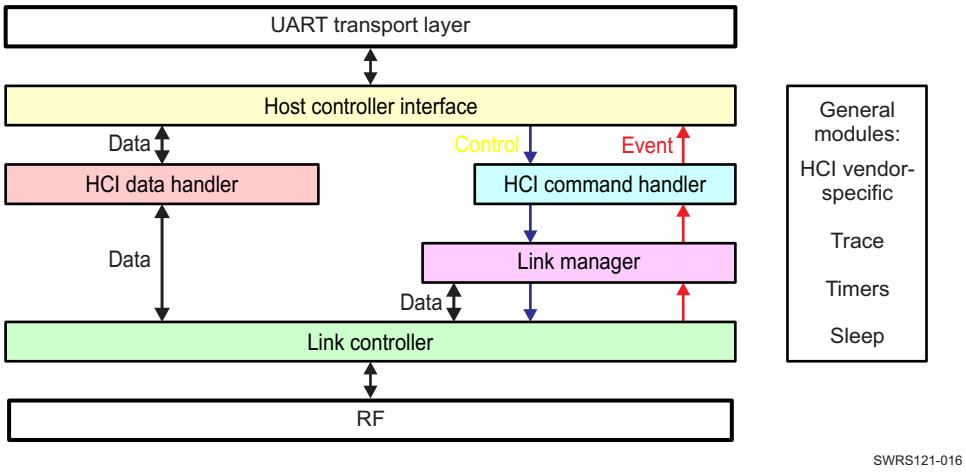

Figure 2-1. *Bluetooth* Transport Layers

Copyright © 2012–2014, Texas Instruments Incorporated

3 Detailed Description

3.1 Pin Designation

Figure 3-1 shows the bottom view of the pin designations.

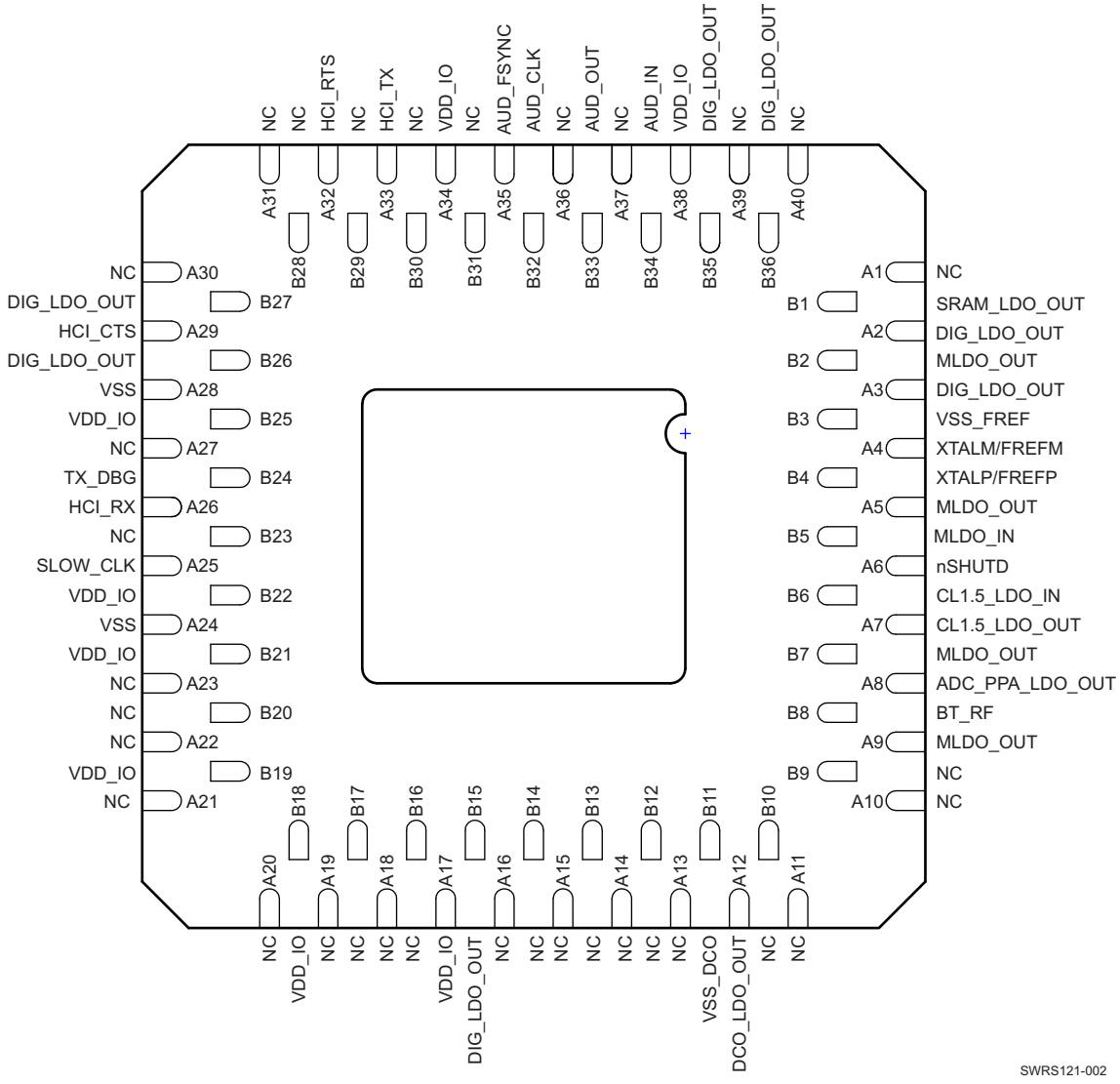

Figure 3-1. Pin Designation (Bottom View)

3.2 Terminal Functions

Table 3-1 describes the terminal functions.

Table 3-1. Device Pad Descriptions

Name	No.	Pull at Reset	Def. Dir.(1)	I/O Type(2)	Description
I/O Signals					
HCI_RX	A26	PU	I	8 mA	HCI universal asynchronous receiver/transmitter (UART) data receive
HCI_TX	A33	PU	O	8 mA	HCI UART data transmit
HCI_RTS	A32	PU	O	8 mA	HCI UART request-to-send The host is allowed to send data when HCI_RTS is low.
HCI_CTS	A29	PU	I	8 mA	HCI UART clear-to-send The CC256x device is allowed to send data when HCI_CTS is low.
AUD_FSYNC	A35	PD	I/O	4 mA	pulse-code modulation (PCM) frame-sync signal Fail-safe
AUD_CLK	B32	PD	I/O	HY, 4 mA	PCM clock Fail-safe
AUD_IN	B34	PD	I	4 mA	PCM data input Fail-safe
AUD_OUT	B33	PD	O	4 mA	PCM data output Fail-safe
TX_DBG	B24	PU	O	2 mA	TI internal debug messages. TI recommends leaving an internal test point.
Clock Signals					
SLOW_CLK	A25		I		32.768-kHz clock in Fail-safe
XTALP/FREFP	B4		I		Fast clock in analog (sine wave) Output terminal of fast-clock crystal Fail-safe
XTALM/FREFM	A4		I		Fast clock in digital (square wave) Input terminal of fast-clock crystal Fail-safe
Analog Signals					
BT_RF	B8		I/O		*Bluetooth* RF I/O
nSHUTD	A6	PD	I		Shutdown input (active low)
Power and Ground Signals					
VDD_IO	A17, A34, A38, B18, B19, B21, B22, B25		I		I/O power supply (1.8-V nominal)
MLDO_IN	B5		I		Main LDO input Connect directly to battery
MLDO_OUT	A5, A9, B2, B7		I/O		Main LDO output (1.8-V nominal)
CL1.5_LDO_IN	B6		I		Power amplifier (PA) LDO input Connect directly to battery
CL1.5_LDO_OUT	A7		O		PA LDO output
DIG_LDO_OUT	A2, A3, B15, B26, B27, B35, B36		O		Digital LDO output QFN pin B26 or B27 must be shorted to other DIG_LDO_OUT pins on the PCB.
SRAM_LDO_OUT	B1		O		SRAM LDO output
DCO_LDO_OUT	A12		O		DCO LDO output

(1) I = input; O = output; I/O = bidirectional
(2) I/O Type: Digital I/O cells. HY = input hysteresis, current = typical output current

Copyright © 2012–2014, Texas Instruments Incorporated

Table 3-1. Device Pad Descriptions (continued)

Name	No.	Pull at Reset	Def. Dir.(1)	I/O Type(2)	Description
ADC_PPA_LDO_OUT	A8		O		ADC/PPA LDO output
VSS	A24, A28		I		Ground
VSS_DCO	B11		I		DCO ground
VSS_FREF	B3		I		Fast clock ground
No Connect					
NC	A1				Not connected
NC	A10				Not connected
NC	A11				Not connected
NC	A14				Not connected
NC	A18				Not connected
NC	A19				Not connected
NC	A20				Not connected
NC	A21				Not connected
NC	A22				Not connected
NC	A23				Not connected
NC	A27				Not connected
NC	A30				Not connected
NC	A31				Not connected
NC	A40				Not connected
NC	B9				Not connected
NC	B10				Not connected
NC	B16				Not connected
NC	B17				Not connected
NC	B20				Not connected
NC	B23				Not connected
NC	A13		O		TI internal use
NC	A15		O		TI internal use
NC	A16		I/O		TI internal use
NC	A36		I/O		TI internal use
NC	A37		I/O		TI internal use
NC	A39		I/O		TI internal use
NC	B12		I		TI internal use
NC	B13		I		TI internal use
NC	B14		O		TI internal use
NC	B29		O		TI internal use
NC	B30		I/O		TI internal use
NC	B31		I		TI internal use
NC	B28		I		TI internal use

Copyright © 2012–2014, Texas Instruments Incorporated

3.3 Device Power Supply

The CC256x power-management hardware and software algorithms provide significant power savings, which is a critical parameter in an MCU-based system.

The power-management module is optimized for drawing extremely low currents.

3.3.1 Power Sources

The CC256x device requires two power sources:

- VDD_IN: main power supply for the module
- VDD_IO: power source for the 1.8-V I/O ring

The HCI module includes several on-chip voltage regulators for increased noise immunity and can be connected directly to the battery.

3.3.2 Device Power-Up and Power-Down Sequencing

The device includes the following power-up requirements (see Figure 3-2):

- nSHUTD must be low. VDD_IN and VDD_IO are don't-care when nSHUTD is low. However, signals are not allowed on the I/O pins if I/O power is not supplied, because the I/Os are not fail-safe. Exceptions are SLOW_CLK_IN and AUD_xxx, which are fail-safe and can tolerate external voltages with no VDD_IO and VDD_IN.
- VDD_IO and VDD_IN must be stable before releasing nSHUTD.
- The fast clock must be stable within 20 ms of nSHUTD going high.
- The slow clock must be stable within 2 ms of nSHUTD going high.

The device indicates that the power-up sequence is complete by asserting RTS low, which occurs up to 100 ms after nSHUTD goes high. If RTS does not go low, the device is not powered up. In this case, ensure that the sequence and requirements are met.

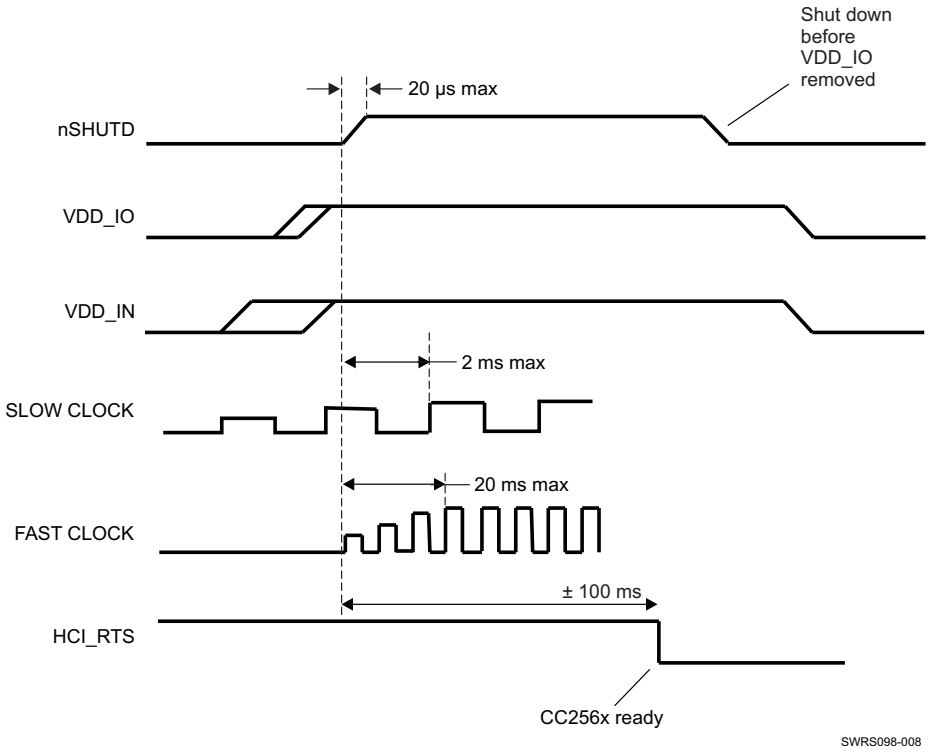

Figure 3-2. Power-Up and Power-Down Sequence

Copyright © 2012–2014, Texas Instruments Incorporated

3.3.3 Power Supplies and Shutdown—Static States

The nSHUTD signal puts the device in ultra-low power mode and performs an internal reset to the device. The rise time for nSHUTD must not exceed 20 µs; nSHUTD must be low for a minimum of 5 ms.

To prevent conflicts with external signals, all I/O pins are set to the high-impedance (Hi-Z) state during shutdown and power up of the device. The internal pull resistors are enabled on each I/O pin, as described in Table 3-1. Table 3-2 describes the static operation states.

Table 3-2. Power Modes

	VDD_IN(1)	VDD_IO(1)	nSHUTD(1)	PM_MODE	Comments
1	None	None	Asserted	Shut down	I/O state is undefined. No I/O voltages are allowed on nonfail-safe pins.
2	None	None	Deasserted	Not allowed	I/O state is undefined. No I/O voltages are allowed on nonfail-safe pins.
3	None	Present	Asserted	Shut down	I/Os are defined as 3-state with internal pullup or pulldown enabled.
4	None	Present	Deasserted	Not allowed	I/O state is undefined. No I/O voltages are allowed on nonfail-safe pins.
5	Present	None	Asserted	Shut down	I/O state is undefined. No I/O voltages are allowed on nonfail-safe pins.
6	Present	None	Deasserted	Not allowed	I/O state is undefined. No I/O voltages are allowed on nonfail-safe pins.
7	Present	Present	Asserted	Shut down	I/Os are defined as 3-state with internal pullup or pulldown enabled.
8	Present	Present	Deasserted	Active	See Section 3.3.4, *I/O States In Various Power Modes*.

(1) The terms *None* or *Asserted* can imply any of the following conditions: directly pulled to ground or driven low, pulled to ground through a pulldown resistor, or left NC or floating (high-impedance output stage).

3.3.4 I/O States In Various Power Modes

CAUTION

Some device I/Os are not fail-safe (see Table 3-1). Fail-safe means that the pins do not draw current from an external voltage applied to the pin when I/O power is not supplied to the device. External voltages are not allowed on these I/O pins when the I/O supply voltage is not supplied because of possible damage to the device.

Table 3-3 lists the I/O states in various power modes.

Table 3-3. I/O States in Various Power Modes

I/O Name	Shut Down(1)		Default Active(1)		Deep Sleep(1)	
	I/O State	Pull	I/O State	Pull	I/O State	Pull
HCI_RX	Z	PU	I	PU	I	PU
HCI_TX	Z	PU	O-H	—	O	—
HCI_RTS	Z	PU	O-H	—	O	—
HCI_CTS	Z	PU	I	PU	I	PU
AUD_CLK	Z	PD	I	PD	I	PD
AUD_FSYNC	Z	PD	I	PD	I	PD
AUD_IN	Z	PD	I	PD	I	PD
AUD_OUT	Z	PD	Z	PD	Z	PD
TX_DBG	Z	PU	O	—		

(1) I = input, O = output, Z = Hi-Z, — = no pull, PU = pullup, PD = pulldown, H = high, L = low

Copyright © 2012–2014, Texas Instruments Incorporated

3.4 Clock Inputs

3.4.1 Slow Clock

An external source must supply the slow clock and connect to the SLOW_CLK_IN pin (for example, the host or external crystal oscillator). The source must be a digital signal in the range of 0 to 1.8 V.

The accuracy of the slow clock frequency must be 32.768 kHz ±250 ppm for *Bluetooth* use (as specified in the *Bluetooth* specification).

The external slow clock must be stable within 64 slow-clock cycles (2 ms) following the release of nSHUTD.

3.4.2 Fast Clock Using External Clock Source

An external clock source is fed to an internal pulse-shaping cell to provide the fast-clock signal for the device. The device incorporates an internal, automatic clock-scheme detection mechanism that automatically detects the fast-clock scheme used and configures the F_{REF} cell accordingly. This mechanism ensures that the electrical characteristics (loading) of the fast-clock input remain static regardless of the scheme used and eliminates any power-consumption penalty-versus-scheme used.

This section describes the requirements for fast clock use. The frequency variation of the fast-clock source must not exceed ±20 ppm (as defined by the *Bluetooth* specification).

The external clock can be AC- or DC-coupled, sine or square wave.

3.4.2.1 External F_{REF} DC-Coupled

Figure 3-3 and Figure 3-4 show the clock configuration when using a square wave, DC-coupled external source for the fast clock input.

NOTE

A shunt capacitor with a range of 10 nF must be added on the oscillator output to reject high harmonics and shape the signal to be close to a sinusoidal waveform.

TI recommends using only a dedicated LDO to feed the oscillator. Do not use the same VIO for the oscillator and the CC256x device.

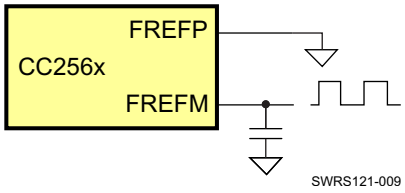

Figure 3-3. Clock Configuration (Square Wave, DC-Coupled)

Copyright © 2012–2014, Texas Instruments Incorporated

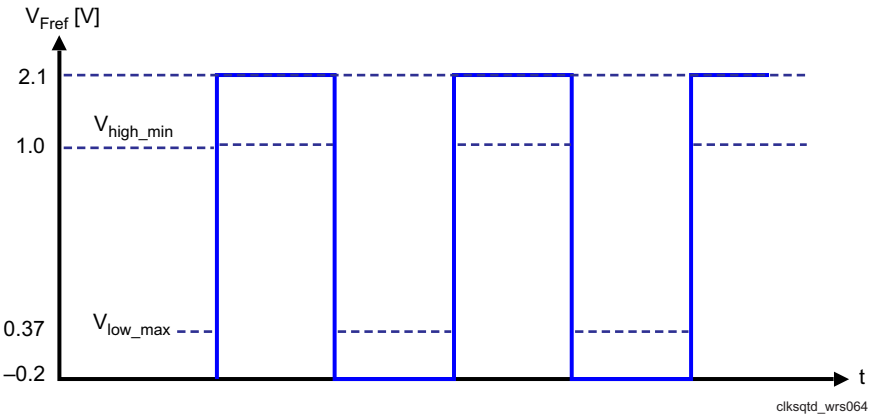

Figure 3-4. External Fast Clock (Square Wave, DC-Coupled)

Figure 3-5 and Figure 3-6 show the clock configuration when using a sine wave, DC-coupled external source for the fast clock input.

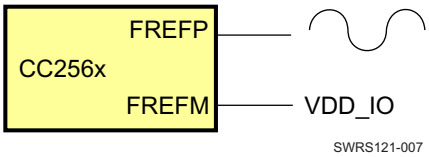

Figure 3-5. Clock Configuration (Sine Wave, DC-Coupled)

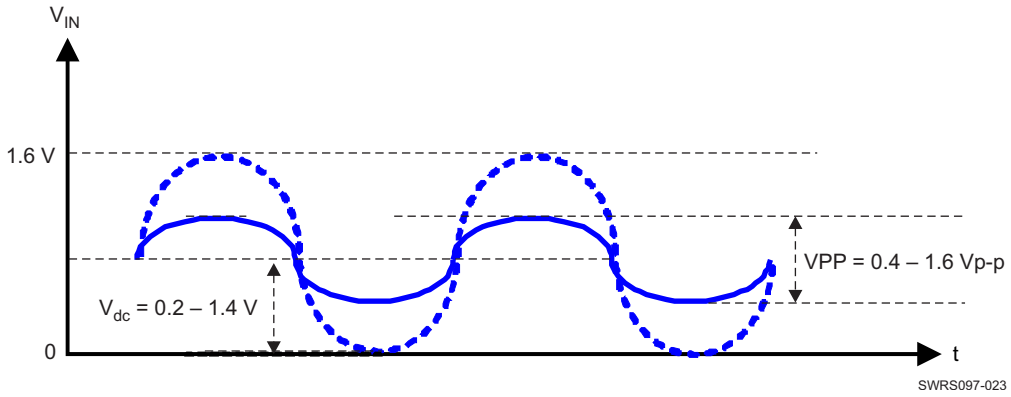

Figure 3-6. External Fast Clock (Sine Wave, DC-Coupled)

3.4.2.2 External F_{REF} Sine Wave, AC-Coupled

Figure 3-7 and Figure 3-8 show the configuration when using a sine wave, AC-coupled external source for the fast-clock input.

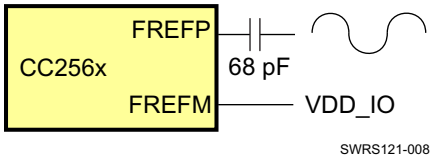

Figure 3-7. Clock Configuration (Sine Wave, AC-Coupled)

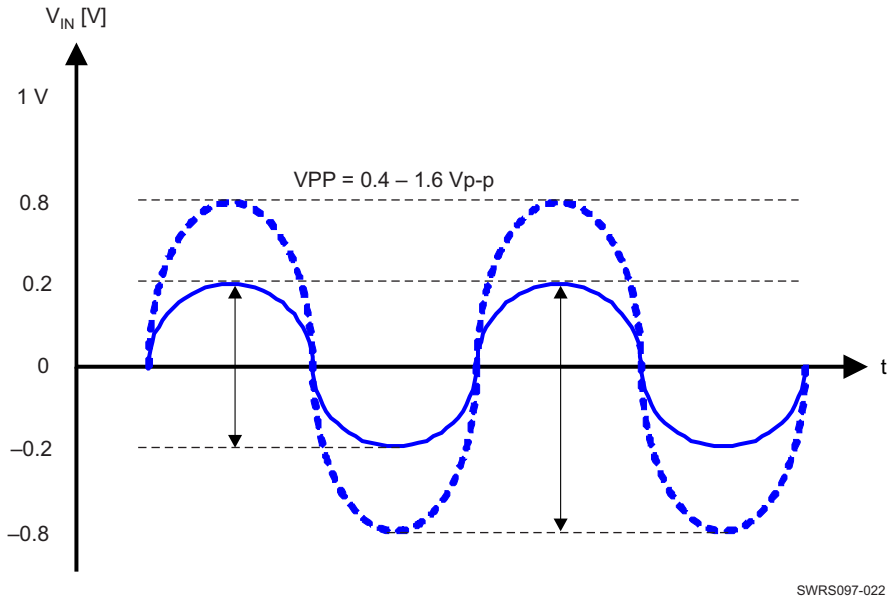

Figure 3-8. External Fast Clock (Sine Wave, AC-Coupled)

In cases where the input amplitude is greater than 1.6 Vp-p, the amplitude can be reduced to within limits. Using a small series capacitor forms a voltage divider with the internal input capacitance of approximately 2 pF to provide the required amplitude at the device input.

3.4.2.3 Fast Clock Using External Crystal

The CC256x device incorporates an internal crystal oscillator buffer to support a crystal-based fast-clock scheme. The supported crystal frequency is 26 MHz.

The frequency accuracy of the fast clock source must not exceed ±20 ppm (including the accuracy of the capacitors, as specified in the *Bluetooth* specification).

Figure 3-9 shows the recommended fast-clock circuitry.

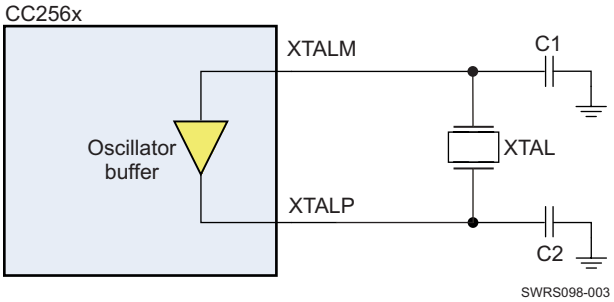

Figure 3-9. Fast-Clock Crystal Circuit

Table 3-4 lists component values for the fast-clock crystal circuit.

Table 3-4. Fast-Clock Crystal Circuit Component Values

FREQ (MHz)	C1 (pF)(1)	C2 (pF)(1)
26	12	12

(1) To achieve the required accuracy, values for C1 and C2 must be taken from the crystal manufacturer's data sheet and layout considerations.

Copyright © 2012–2014, Texas Instruments Incorporated

3.5 Functional Blocks

The CC256x architecture comprises a DRP™ and a point-to-multipoint baseband core. The architecture is based on a single-processor ARM7TDMIE® core. The device includes several on-chip peripherals to enable easy communication with a host system and the *Bluetooth* BR/EDR/LE core.

3.5.1 RF

The device is the third generation of TI *Bluetooth* single-chip devices using DRP architecture. Modifications and new features added to the DRP further improve radio performance.

Figure 3-10 shows the DRP block diagram.

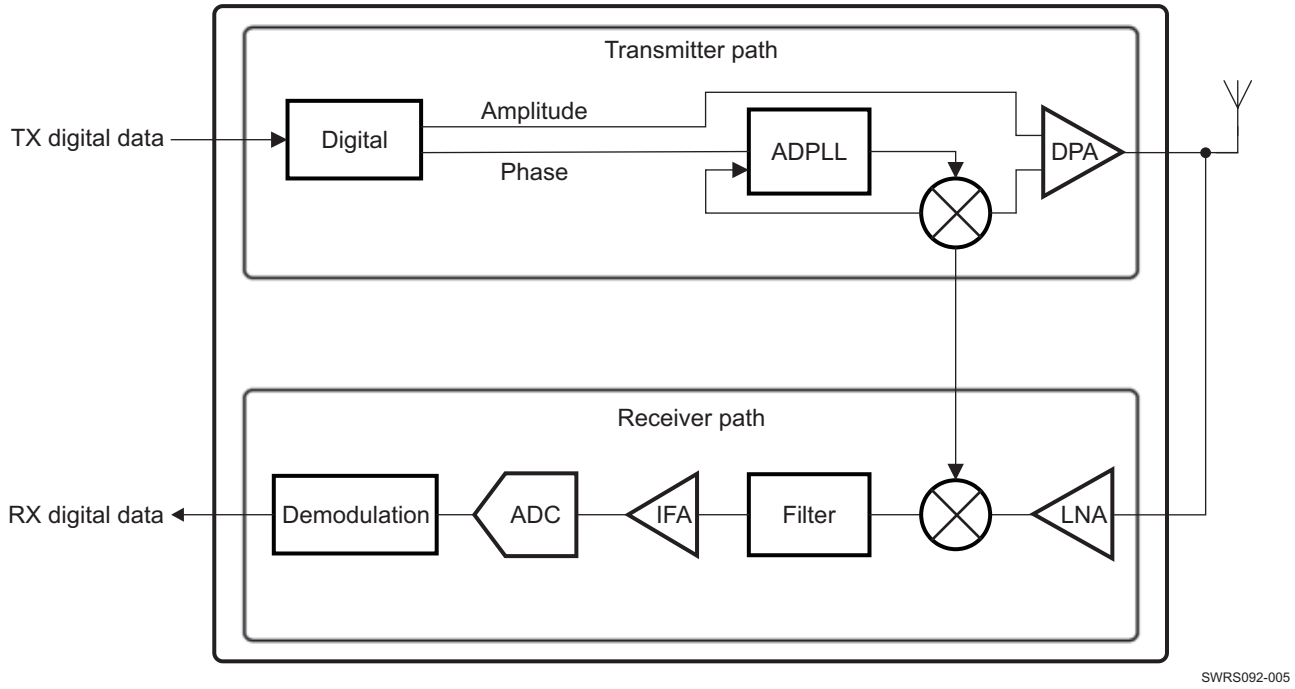

Figure 3-10. DRP Block Diagram

3.5.1.1 Receiver

The receiver uses near-zero-IF architecture to convert the RF signal to baseband data. The signal received from the external antenna is input to a single-ended low-noise amplifier (LNA) and passed to a mixer that downconverts the signal to IF, followed by a filter and amplifier. The signal is then quantized by a sigma-delta analog-to-digital converter (ADC) and further processed to reduce the interference level.

The demodulator digitally downconverts the signal to zero-IF and recovers the data stream using an adaptive-decision mechanism. The demodulator includes EDR processing with:

- State-of-the-art performance
- A maximum-likelihood sequence estimator (MLSE) to improve the performance of basic-rate GFSK sensitivity
- Adaptive equalization to enhance EDR modulation

New features include:

- LNA input range narrowed to increase blocking performance
- Active spur cancellation to increase robustness to spurs

Copyright © 2012–2014, Texas Instruments Incorporated

3.5.1.2 Transmitter

The transmitter is an all-digital, sigma-delta phase-locked loop (ADPLL) based with a digitally controlled oscillator (DCO) at 2.4 GHz as the RF frequency clock. The transmitter directly modulates the digital PLL. The power amplifier is also digitally controlled. The transmitter uses the polar-modulation technique. While the phase-modulated control word is fed to the ADPLL, the amplitude-modulated controlled word is fed to the class-E amplifier to generate a *Bluetooth* standard-compliant RF signal.

New features include:

- Improved TX output power
- LMS algorithm to improve the differential error vector magnitude (DEVM)

3.5.2 Host Controller Interface

The CC256x device incorporates one UART module dedicated to the HCI transport layer. The HCI interface transports commands, events, and ACL between the device and the host using HCI data packets.

All members of the CC256x family support the H4 protocol (4-wire UART) with hardware flow control. The CC2560B and CC2564B devices also support the H5 protocol (3-wire UART) with software flow control. The CC256x device automatically detects the protocol when it receives the first command.

The maximum baud rate of the UART module is 4 Mbps; however, the default baud rate after power up is set to 115.2 kbps. The baud rate can thereafter be changed with a VS command. The device responds with a command complete event (still at 115.2 kbps), after which the baud rate change occurs.

The UART module includes the following features:

- Receiver detection of break, idle, framing, FIFO overflow, and parity error conditions
- Transmitter underflow detection
- CTS and RTS hardware flow control (H4 protocol)
- XON and XOFF software flow control (H5 protocol)

Table 3-5 lists the UART module default settings.

Table 3-5. UART Module Default Settings

Parameter	Value
Bit rate	115.2 kbps
Data length	8 bits
Stop bit	1
Parity	None

3.5.2.1 H4 Protocol—4-Wire UART Interface

The H4 UART interface includes four signals:

- TX
- RX
- CTS
- RTS

Flow control between the host and the CC256x device is bytewise by hardware.

Figure 3-11 shows the H4 UART interface.

Copyright © 2012–2014, Texas Instruments Incorporated

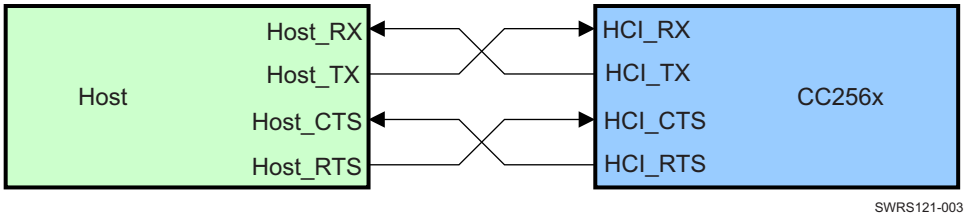

Figure 3-11. H4 UART Interface

When the UART RX buffer of the CC256x device passes the flow control threshold, it sets the HCI_RTS signal high to stop transmission from the host.

When the HCI_CTS signal is set high, the CC256x device stops transmission on the interface. If HCI_CTS is set high while transmitting a byte, the device finishes transmitting the byte and stops the transmission.

The H4 protocol device includes a mechanism that handles the transition between active mode and sleep mode. The protocol occurs through the CTS and RTS UART lines and is known as the enhanced HCI low level (eHCILL) power-management protocol.

For more information on the H4 UART protocol, see *Volume 4 Host Controller Interface, Part A UART Transport Layer of the Bluetooth Core Specifications* (www.bluetooth.org/en-us/specification/adoptedspecifications).

3.5.2.2 H5 Protocol—3-Wire UART Interface (CC2560B and CC2564B Devices)

The H5 UART interface consists of three signals (see Figure 3-12):

- TX
- RX
- GND

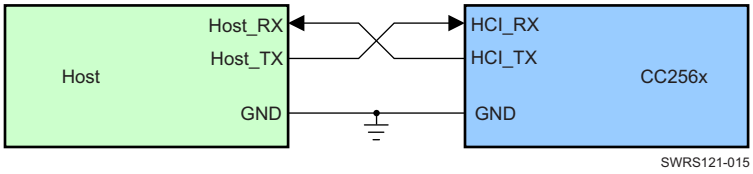

Figure 3-12. H5 UART Interface

The H5 protocol supports the following features:

- Software flow control (XON/XOFF)
- Power management using the software messages:
  - WAKEUP
  - WOKEN
  - SLEEP
- CRC data integrity check

For more information on the H5 UART protocol, see *Volume 4 Host Controller Interface, Part D Three-Wire UART Transport Layer of the Bluetooth Core Specifications* (www.bluetooth.org/en-us/specification/adoptedspecifications).

3.5.3 Digital Codec Interface

The codec interface is a fully programmable port to support seamless interfacing with different PCM and I2S codec devices. The interface includes the following features:

- Two voice channels
- Master and slave modes

Copyright © 2012–2014, Texas Instruments Incorporated

- All voice coding schemes defined by the *Bluetooth* specification: linear, A-Law, and μ-Law
- Long and short frames
- Different data sizes, order, and positions
- High flexibility to support a variety of codecs
- Bus sharing: Data_Out is in Hi-Z state when the interface is not transmitting voice data.

3.5.3.1 Hardware Interface

The interface includes four signals:

- Clock: configurable direction (input or output)
- Frame_Sync and Word_Sync: configurable direction (input or output)
- Data_In: input
- Data_Out: output or 3-state

The CC256x device can be the master of the interface when generating the Clock and Frame_Sync signals or the slave when receiving these two signals.

For slave mode, clock input frequencies of up to 15 MHz are supported. At clock rates above 12 MHz, the maximum data burst size is 32 bits.

For master mode, the device can generate any clock frequency between 64 kHz and 4.096 MHz.

3.5.3.2 I2S

When the codec interface is configured to support the I2S protocol, these settings are recommended:

- Bidirectional, full-duplex interface
- Two time slots per frame: time slot-0 for the left channel audio data; and time slot-1 for the right channel audio data
- Each time slot is configurable up to 40 serial clock cycles long, and the frame is configurable up to 80 serial clock cycles long.

3.5.3.3 Data Format

The data format is fully configurable:

- The data length can be from 8 to 320 bits in 1-bit increments when working with 2 channels, or up to 640 bits when working with 1 channel. The data length can be set independently for each channel.
- The data position within a frame is also configurable within 1 clock (bit) resolution and can be set independently (relative to the edge of the Frame_Sync signal) for each channel.
- The Data_In and Data_Out bit order can be configured independently. For example; Data_In can start with the most significant bit (MSB); Data_Out can start with the least significant bit (LSB). Each channel is separately configurable. The inverse bit order (that is, LSB first) is supported only for sample sizes up to 24 bits.
- Data_In and Data_Out are not required to be the same length.
- The Data_Out line is configured to Hi-Z output between data words. Data_Out can also be set for permanent Hi-Z, regardless of the data output. This configuration allows the device to be a bus slave in a multislave PCM environment. At power up, Data_Out is configured as Hi-Z.

3.5.3.4 Frame Idle Period

The codec interface handles frame idle periods, in which the clock pauses and becomes 0 at the end of the frame, after all data are transferred.

The device supports frame idle periods both as master and slave of the codec bus.

When the device is the master of the interface, the frame idle period is configurable. There are two configurable parameters:

Copyright © 2012–2014, Texas Instruments Incorporated

- Clk_Idle_Start: indicates the number of clock cycles from the beginning of the frame to the beginning of the idle period. After Clk_Idle_Start clock cycles, the clock becomes 0.
- Clk_Idle_End: indicates the time from the beginning of the frame to the end of the idle period. The time is given in multiples of clock periods.

The delta between Clk_Idle_Start and Clk_Idle_End is the clock idle period.

For example, for clock rate = 1 MHz, frame sync period = 10 kHz, Clk_Idle_Start = 60, Clk_Idle_End = 90.

Between both Frame_Sync signals there are 70 clock cycles (instead of 100). The clock idle period starts 60 clock cycles after the beginning of the frame and lasts 90 – 60 = 30 clock cycles. Thus, the idle period ends 100 – 90 = 10 clock cycles before the end of the frame. The data transmission must end before the beginning of the idle period.

Figure 3-13 shows the frame idle timing.

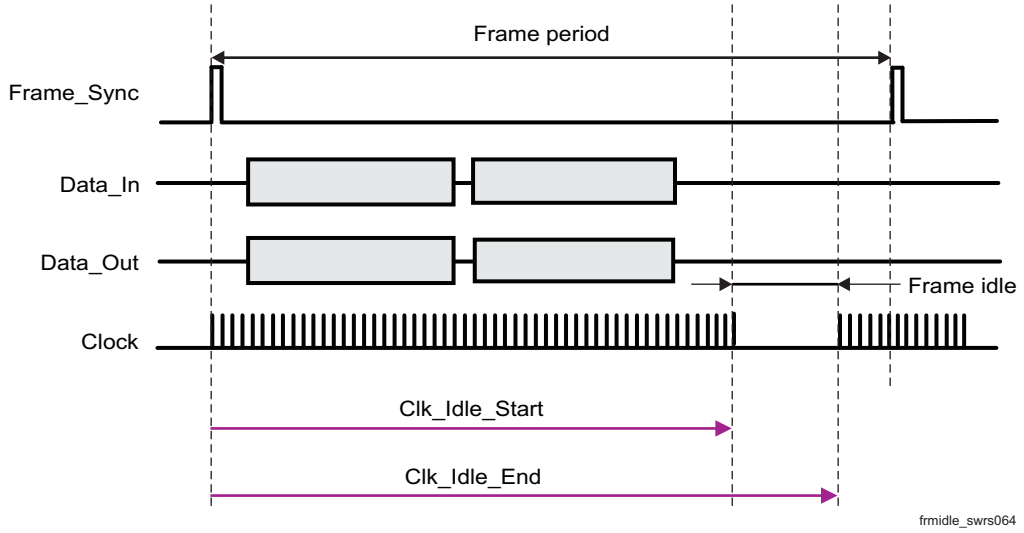

Figure 3-13. Frame Idle Period

3.5.3.5 Clock-Edge Operation

The codec interface of the device can work on the rising or the falling edge of the clock and can sample the Frame_Sync signal and the data at inversed polarity.

Figure 3-14 shows the operation of a falling-edge-clock type of codec. The codec is the master of the bus. The Frame_Sync signal is updated (by the codec) on the falling edge of the clock and is therefore sampled (by the device) on the next rising clock. The data from the codec is sampled (by the device) on the falling edge of the clock.

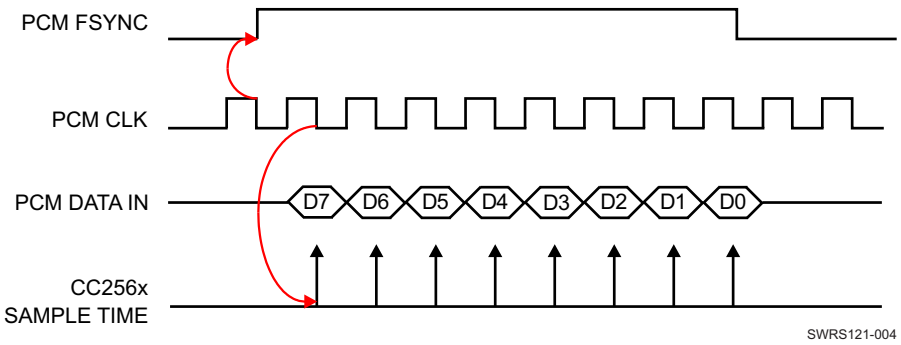

Figure 3-14. Negative Clock Edge Operation

3.5.3.6 Two-Channel Bus Example

Figure 3-15 shows a 2-channel bus in which the two channels have different word sizes and arbitrary positions in the bus frame. (FT stands for frame timer.)

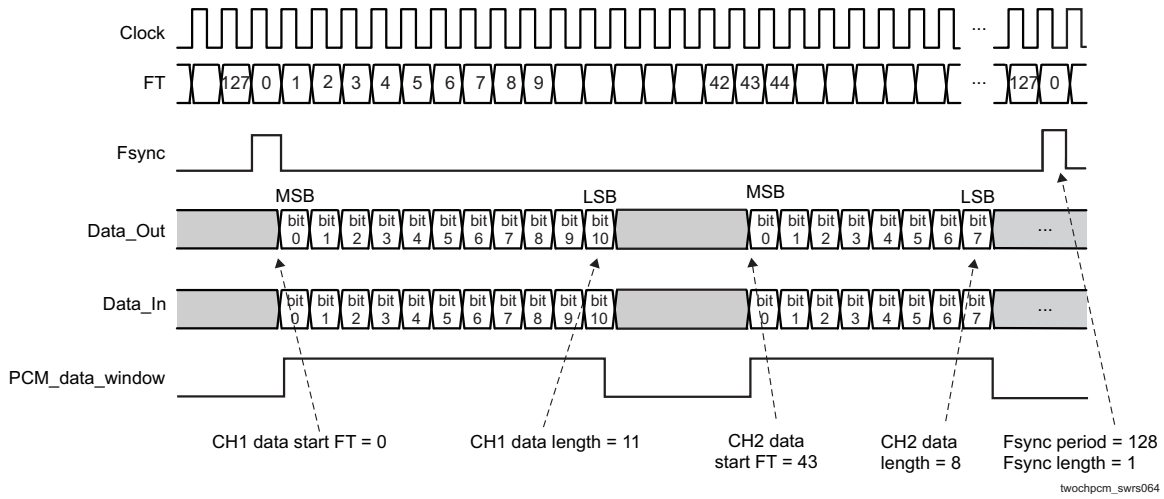

Figure 3-15. 2-Channel Bus Timing

3.5.3.7 Improved Algorithm For Lost Packets

The device features an improved algorithm to improve voice quality when received voice data packets are lost. There are two options:

- Repeat the last sample: possible only for sample sizes up to 24 bits. For sample sizes larger than 24 bits, the last byte is repeated.
- Repeat a configurable sample of 8 to 24 bits (depending on the real sample size) to simulate silence (or anything else) in the bus. The configured sample is written in a specific register for each channel.

The choice between those two options is configurable separately for each channel.

3.5.3.8 *Bluetooth* and Codec Clock Mismatch Handling

In *Bluetooth* RX, the device receives RF voice packets and writes them to the codec interface. If the device receives data faster than the codec interface output allows, an overflow occurs. In this case, the *Bluetooth* has two possible modes of behavior:

- Allow overflow: if overflow is allowed, the *Bluetooth* continues receiving data and overwrites any data not yet sent to the codec.
- Do not allow overflow: if overflow is not allowed, RF voice packets received when the buffer is full are discarded.

3.5.4 Assisted Modes (CC2560B and CC2564B Devices)

The CC256x devices contain an embedded coprocessor (see Figure 1-1) that can be used for multiple purposes. The CC2564 and CC2564B devices use the coprocessor to perform the LE or ANT functionality. The CC2560B and CC2564B devices use the coprocessor to execute the assisted HFP 1.6 (WBS) or assisted A2DP functions. Only one of these functions can be executed at a time because they all use the same resources (that is, the coprocessor; see Table 1-1 for the modes of operation supported by each device).

Copyright © 2012–2014, Texas Instruments Incorporated

This section describes the assisted HFP 1.6 (WBS) and assisted A2DP modes of operation in the CC2560B and CC2564B devices. These modes of operation minimize host processing and power by taking advantage of the device coprocessor to perform the voice and audio SBC processing required in HFP 1.6 (WBS) and A2DP profiles. This section also compares the architecture of the assisted modes with the common implementation of the HFP 1.6 and A2DP profiles.

The assisted HFP 1.6 (WBS) and assisted A2DP modes of operation comply fully with the HFP 1.6 and A2DP *Bluetooth* specifications. For more information on these profiles, see the corresponding *Bluetooth* Profile Specification (www.bluetooth.org/en-us/specification/adopted-specifications).

3.5.4.1 Assisted HFP 1.6 (WBS)

The *HFP 1.6 Profile Specification* adds the requirement for WBS support. The WBS feature allows twice the voice quality versus legacy voice coding schemes at the same air bandwidth (64 kbps). This feature is achieved using a voice sampling rate of 16 kHz, a modified subband coding (mSBC) scheme, and a packet loss concealment (PLC) algorithm. The mSBC scheme is a modified version of the mandatory audio coding scheme used in the A2DP profile with the parameters listed in Table 3-6.

Table 3-6. mSBC Parameters

Parameter	Value
Channel mode	Mono
Sampling rate	16 kHz
Allocation method	Loudness
Subbands	8
Block length	15
Bitpool	26

The assisted HFP 1.6 mode of operation implements this WBS feature on the embedded coprocessor. That is, the mSBC voice coding scheme and the PLC algorithm are executed in the coprocessor rather than in the host, thus minimizing host processing and power. One WBS connection at a time is supported and WBS and NBS connections cannot be used simultaneously in this mode of operation. Figure 3-16 shows the architecture comparison between the common implementation of the HFP 1.6 profile and the assisted HFP 1.6 solution.

Copyright © 2012–2014, Texas Instruments Incorporated

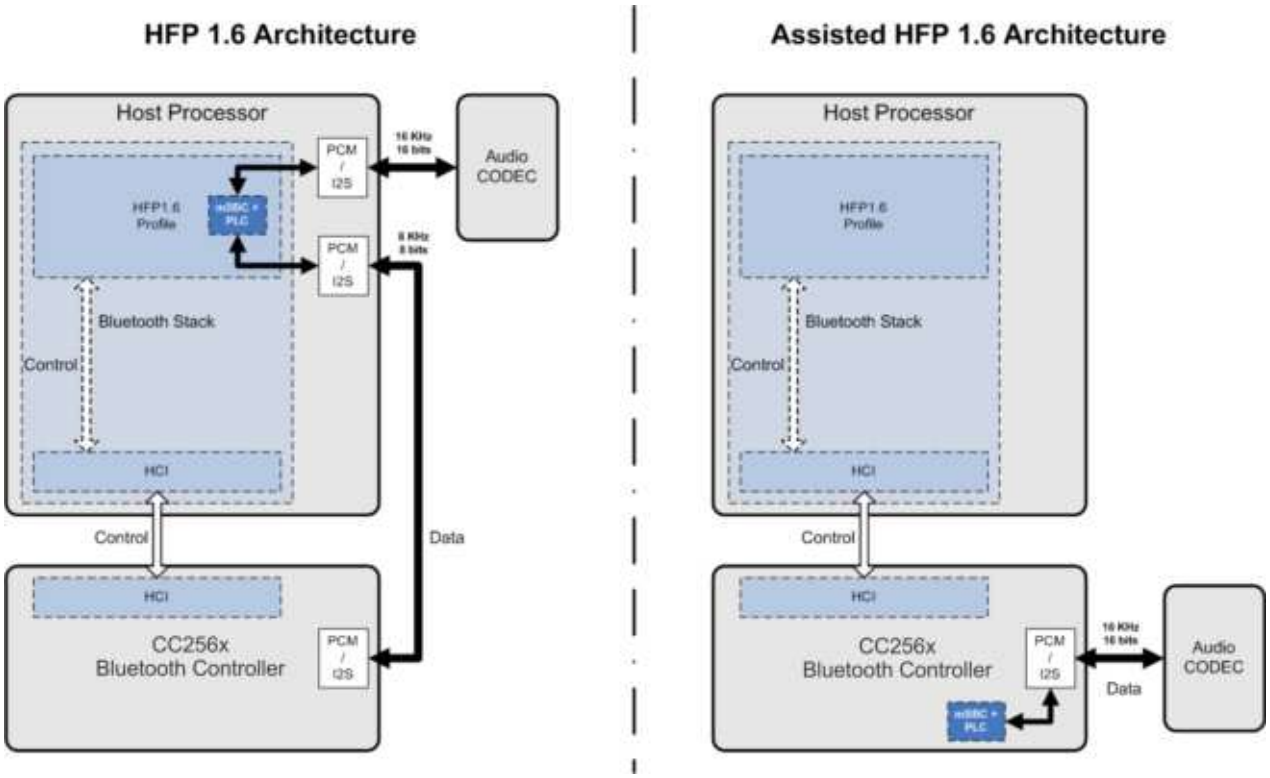

Figure 3-16. HFP 1.6 Architecture Versus Assisted HFP 1.6 Architecture

For detailed information on the HFP 1.6 profile, see the *Hands-Free Profile 1.6 Specification* (www.bluetooth.org/en-us/specification/adopted-specifications).

3.5.4.2 Assisted A2DP

The A2DP enables wireless transmission of high-quality mono or stereo audio between two devices. A2DP defines two roles:

- A2DP source is the transmitter of the audio stream.
- A2DP sink is the receiver of the audio stream.

A typical use case streams music from a tablet, phone, or PC (the A2DP source) to headphones or speakers (the A2DP sink). This section describes the architecture of these roles and compares them with the corresponding assisted-A2DP architecture. To use the air bandwidth efficiently, the audio data must be compressed in a proper format. The A2DP mandates support of the SBC scheme. Other audio coding algorithms can be used; however, both *Bluetooth* devices must support the same coding scheme. SBC is the only coding scheme spread out in all A2DP *Bluetooth* devices, and thus the only coding scheme supported in the assisted A2DP modes. Table 3-7 lists the recommended parameters for the SBC scheme in the assisted A2DP modes.

Copyright © 2012–2014, Texas Instruments Incorporated

Table 3-7. Recommended Parameters for the SBC Scheme in Assisted A2DP Modes

SBC Encoder Settings(1)	Mid Quality				High Quality			
	Mono		Joint Stereo		Mono		Joint Stereo	
Sampling frequency (kHz)	44.1	48	44.1	48	44.1	48	44.1	48
Bitpool value	19	18	35	33	31	29	53	51
Resulting frame length (bytes)	46	44	83	79	70	66	119	115
Resulting bit rate (Kbps)	127	132	229	237	193	198	328	345

(1) Other settings: Block length = 16; allocation method = loudness; subbands = 8.

The SBC scheme supports a wide variety of configurations to adjust the audio quality. Table 3-8 through Table 3-15 list the supported SBC capabilities in the assisted A2DP modes.

Table 3-8. Channel Modes

Channel Mode	Status
Mono	Supported
Stereo	Supported
Joint stereo	Supported

Table 3-9. Sampling Frequency

Sampling Frequency (kHz)	Status
16	Supported
44.1	Supported
48	Supported

Table 3-10. Block Length

Block Length	Status
16	Supported

Table 3-11. Subbands

Subbands	Status
8	Supported

Table 3-12. Allocation Method

Allocation Method	Status
Loudness	Supported

Table 3-13. Bitpool Values

Bitpool Range	Status
Assisted A2DP sink: TBD	Supported
Assisted A2DP source: 2–57	Supported

Copyright © 2012–2014, Texas Instruments Incorporated

Table 3-14. L2CAP MTU Size

L2CAP MTU Size (Bytes)	Status
Assisted A2DP sink: 260–800	Supported
Assisted A2DP source: 260–1021	Supported

Table 3-15. Miscellaneous Parameters

Item	Value	Status
A2DP content protection	Protected	Not supported
AVDTP service	Basic type	Supported
L2CAP mode	Basic mode	Supported
L2CAP flush	Nonflushable	Supported

For detailed information on the A2DP profile, see the *A2DP Profile Specification* (www.bluetooth.org/enus/specification/adopted-specifications).

3.5.4.2.1 Assisted A2DP Sink

The A2DP sink role is the receiver of the audio stream in an A2DP *Bluetooth* connection. In this role, the A2DP layer and its underlying layers are responsible for link management and data decoding. To handle these tasks, two logic transports are defined:

- Control and signaling logic transport
- Data packet logic transport

The assisted A2DP takes advantage of this modularity to handle the data packet logic transport in the CC256x device by implementing a light L2CAP layer (L-L2CAP) and light AVDTP layer (L-AVDTP) to defragment the packets. Then the assisted A2DP performs the SBC decoding on-chip to deliver raw audio data through the CC256x PCM–I2S interface. Figure 3-17 shows the comparison between a common A2DP sink architecture and the assisted A2DP sink architecture.

Copyright © 2012–2014, Texas Instruments Incorporated

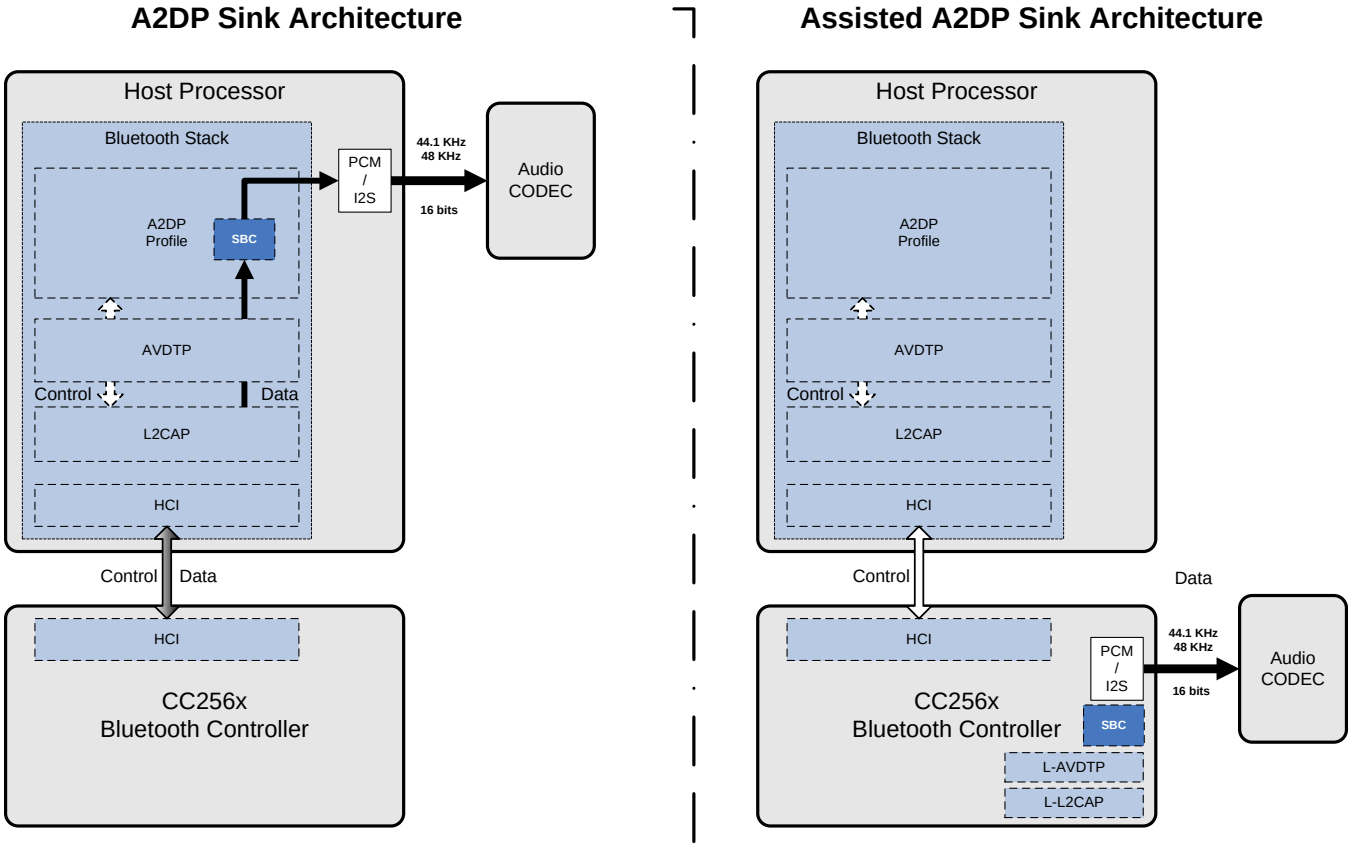

Figure 3-17. A2DP Sink Architecture Versus Assisted A2DP Sink Architecture

For more information on the A2DP sink role, see the *A2DP Profile Specification* (www.bluetooth.org/enus/specification/adopted-specifications).

3.5.4.2.2 Assisted A2DP Source

The role of the A2DP source is to transmit the audio stream in an A2DP *Bluetooth* connection. In this role, the A2DP layer and its underlying layers are responsible for link management and data encoding. To handle these tasks, two logic transports are defined:

- Control and signaling logic transport
- Data packet logic transport

The assisted A2DP takes advantage of this modularity to handle the data packet logic transport in the CC256x device. First, the assisted A2DP encodes the raw data from the CC256x PCM–I2S interface using an on-chip SBC encoder. The assisted A2DP then implements an L-L2CAP layer and an L-AVDTP layer to fragment and packetize the encoded audio data. Figure 3-18 shows the comparison between a common A2DP source architecture and the assisted A2DP source architecture.

Copyright © 2012–2014, Texas Instruments Incorporated

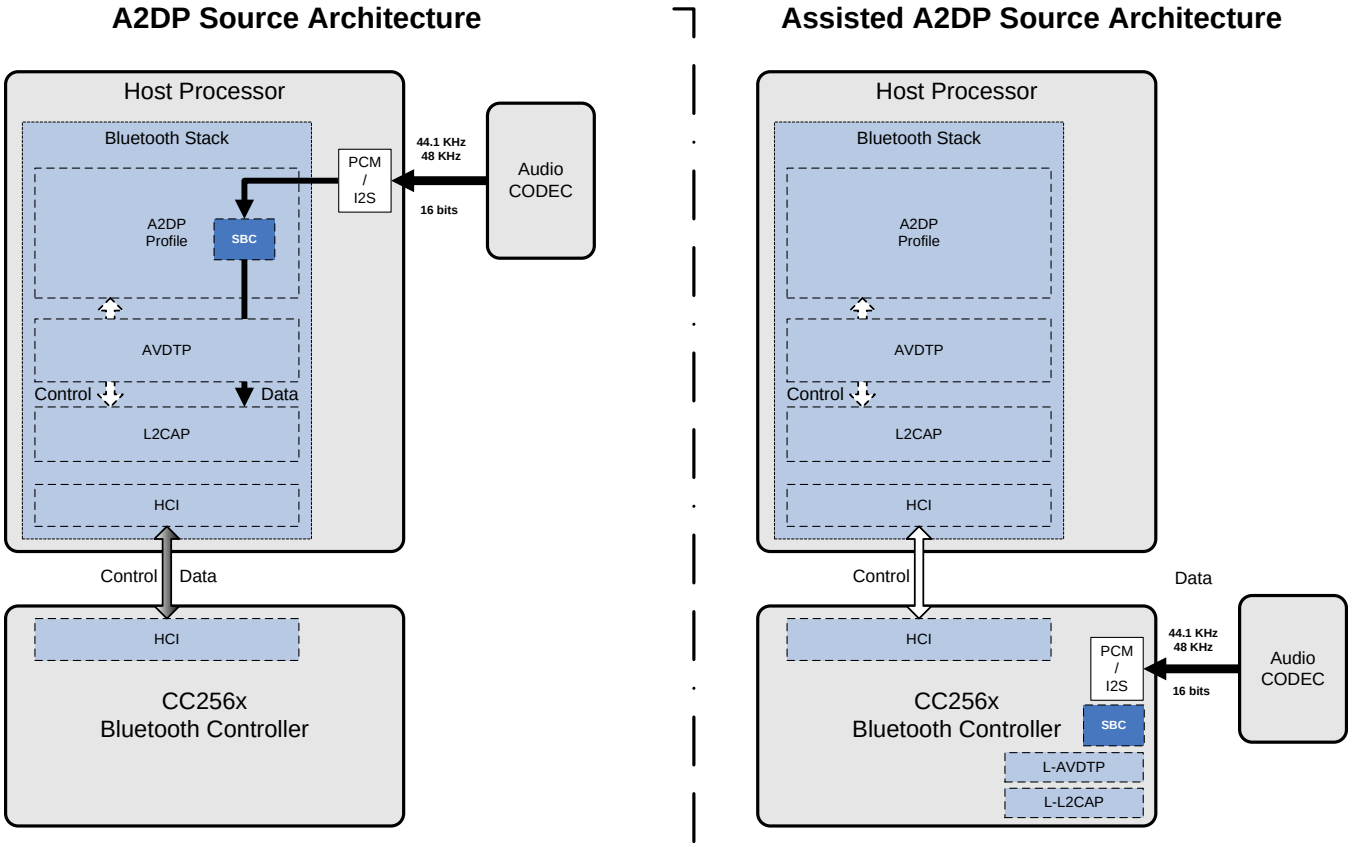

Figure 3-18. A2DP Source Architecture Versus Assisted A2DP Source Architecture

For more information on the A2DP source role, see the *A2DP Profile Specification* (www.bluetooth.org/enus/ specification/adopted-specifications).

Copyright © 2012–2014, Texas Instruments Incorporated

4 Device Specifications

Unless otherwise indicated, all measurements are taken at the device pins of the TI test evaluation board (EVB). All specifications are over process, voltage, and temperature, unless otherwise indicated.

4.1 General Device Requirements and Operation

4.1.1 Absolute Maximum Ratings

Over operating free-air temperature range (unless otherwise indicated)

NOTE

Unless otherwise indicated, all parameters are measured as follows:

VDD_IN = 3.6 V, VDD_IO = 1.8 V

See (1)			Value	Unit
Ratings over operating free-air temperature range				
VDD_IN	Supply voltage range		–0.5 to 4.8	V (2)
VDD_IO			–0.5 to 2.145	V
	Input voltage to analog pins (3)		–0.5 to 2.1	V
	Input voltage to all other pins		–0.5 to (VDD_IO + 0.5)	V
	Operating ambient temperature range (4)		–40 to 85	°C
	Storage temperature range		–55 to 125	°C
	Bluetooth RF inputs		10	dBm
ESD stress voltage (5)	Human body model (HBM) (6)	Device	500	V
	Charged device model (CDM) (7)	Device	250	

(1) Stresses beyond those listed under absolute maximum ratings may cause permanent damage to the device. These are stress ratings only and functional operation of the device at these or any other conditions beyond those indicated under recommended operating conditions is not implied. Exposure to absolute-maximum-rated conditions for extended periods may affect device reliability.
(2) Maximum allowed depends on accumulated time at that voltage: VDD_IN is defined in Section 5, *Reference Design for Power and Radio Connections*.
(3) Analog pins: BT_RF, XTALP, and XTALM
(4) The reference design supports a temperature range of –20°C to 70°C because of the operating conditions of the crystal.
(5) ESD measures device sensitivity and immunity to damage caused by electrostatic discharges into the device.
(6) The level listed is the passing level per ANSI/ESDA/JEDEC JS-001. JEDEC document JEP155 states that 500-V HBM allows safe manufacturing with a standard ESD control process, and manufacturing with less than 500-V HBM is possible, if necessary precautions are taken. Pins listed as 1000 V can actually have higher performance.
(7) The level listed is the passing level per EIA-JEDEC JESD22-C101E. JEDEC document JEP157 states that 250-V CDM allows safe manufacturing with a standard ESD control process, and manufacturing with less than 250-V CDM is possible, if necessary precautions are taken. Pins listed as 250 V can actually have higher performance.

4.1.2 Recommended Operating Conditions

Rating	Condition	Sym	Min	Max	Unit
Power supply voltage		VDD_IN	2.2	4.8	V
I/O power supply voltage		VDD_IO	1.62	1.92	V
High-level input voltage	Default	V_{IH}	0.65 x VDD_IO	VDD_IO	V
Low-level input voltage	Default	V_{IL}	0	0.35 x VDD_IO	V
I/O input rise and all times,10% to 90% — asynchronous mode		t_r and t_f	1	10	ns
I/O input rise and fall times, 10% to 90% — synchronous mode (PCM)			1	2.5	ns
Voltage dips on VDD_IN (V_{BAT}) duration = 577 µs to 2.31 ms, period = 4.6 ms				400	mV
Maximum ambient operating temperature (1) (2)			–40	85	°C

(1) The device can be reliably operated for 7 years at $T_{ambient}$ of 85°C, assuming 25% active mode and 75% sleep mode (15,400 cumulative active power-on hours).
(2) A crystal-based solution is limited by the temperature range required of the crystal to meet 20 ppm.

Copyright © 2012–2014, Texas Instruments Incorporated

4.1.3 Current Consumption

4.1.3.1 Static Current Consumption

Operational Mode	Min	Typ	Max	Unit
Shutdown mode(1)		1	7	µA
Deep sleep mode(2)		40	105	µA
Idle mode		4		mA
Total I/O current consumption in active mode			1	mA
Continuous transmission—GFSK(3)			77	mA
Continuous transmission—EDR(4)(5)			82.5	mA

(1) $V_{BAT} + V_{IO} + V_{SHUTDOWN}$
(2) $V_{BAT} + V_{IO}$
(3) At maximum output power (10 dBm)
(4) At maximum output power (8 dBm)
(5) Both π/4 DQPSK and 8DPSK

4.1.3.2 Dynamic Current Consumption

4.1.3.2.1 Current Consumption for Different Bluetooth BR/EDR Scenarios

Conditions: VDD_IN = 3.6 V, 25°C, 26-MHz XTAL, nominal unit, 4-dBm output power

Operational Mode	Master and Slave	Average Current	Unit
Synchronous connection oriented (SCO) link HV3	Master and slave	13.7	mA
Extended SCO (eSCO) link EV3 64 kbps, no retransmission	Master and slave	13.2	mA
eSCO link 2-EV3 64 kbps, no retransmission	Master and slave	10	mA
GFSK full throughput: TX = DH1, RX = DH5	Master and slave	40.5	mA
EDR full throughput: TX = 2-DH1, RX = 2-DH5	Master and slave	41.2	mA
EDR full throughput: TX = 3-DH1, RX = 3-DH5	Master and slave	41.2	mA
Sniff, one attempt, 1.28 seconds	Master and slave	250	µA
Page or inquiry scan 1.28 seconds, 11.25 ms	Master and slave	400	µA
Page (1.28 seconds) and inquiry (2.56 seconds) scans, 11.25 ms	Master and slave	500	µA

Conditions: VDD_IN = 3.6 V, 25°C, 26-MHz fast clock, nominal unit, 4-dBm output power

Operational Mode	Master and Slave	Average Current	Unit
Synchronous connection oriented (SCO) link HV3	Master and slave	12	mA
Extended SCO (eSCO) link EV3 64 kbps, no retransmission	Master and slave	11.5	mA
eSCO link 2-EV3 64 kbps, no retransmission	Master and slave	8.3	mA
GFSK full throughput: TX = DH1, RX = DH5	Master and slave	38.5	mA
EDR full throughput: TX = 2-DH1, RX = 2-DH5	Master and slave	39.2	mA
EDR full throughput: TX = 3-DH1, RX = 3-DH5	Master and slave	39.2	mA
Sniff, one attempt, 1.28 seconds	Master and slave	76 and 100	µA
Page or inquiry scan 1.28 seconds, 11.25 ms	Master and slave	300	µA
Page (1.28 seconds) and inquiry (2.56 seconds) scans, 11.25 ms	Master and slave	430	µA

Copyright © 2012–2014, Texas Instruments Incorporated

4.1.3.2.2 Current Consumption for Different LE Scenarios

Conditions: VDD_IN = 3.6 V, 25°C, 26-MHz fast clock, nominal unit, 10-dBm output power

Mode	Description	Average Current	Unit
Advertising, nonconnectable	Advertising in all three channels 1.28-seconds advertising interval 15 bytes advertise data	104	µA
Advertising, discoverable	Advertising in all three channels 1.28-seconds advertising interval 15 bytes advertise data	121	µA
Scanning	Listening to a single frequency per window 1.28-seconds scan interval 11.25-ms scan window	302	µA
Connected (master role)	500-ms connection interval 0-ms slave connection latency Empty TX and RX LL packets	169	µA

4.1.4 General Electrical Characteristics

Rating			Condition	Min	Max	Unit
High-level output voltage, V_{OH}			At 2, 4, 8 mA	0.8 x VDD_IO	VDD_IO	V
			At 0.1 mA	VDD_IO – 0.2	VDD_IO	
Low-level output voltage, V_{OL}			At 2, 4, 8 mA	0	0.2 x VDD_IO	V
			At 0.1 mA	0	0.2	
I/O input impedance			Resistance	1		MΩ
			Capacitance		5	pF
Output rise and fall times, 10% to 90% (digital pins)			C_L = 20 pF		10	ns
I/O pull currents	PCM-I2S bus, TX_DBG	PU	typ = 6.5	3.5	9.7	µA
		PD	typ = 27	9.5	55	
	All others	PU	typ = 100	50	300	µA
		PD	typ = 100	50	360	

4.1.5 nSHUTD Requirements

Parameter	Sym	Min	Max	Unit
Operation mode level (1)	V_{IH}	1.42	1.98	V
Shutdown mode level (1)	V_{IL}	0	0.4	V
Minimum time for nSHUT_DOWN low to reset the device		5		ms
Rise and fall times	t_r and t_f		20	µs

(1) An internal pulldown retains shut-down mode when no external signal is applied to this pin.

Copyright © 2012–2014, Texas Instruments Incorporated

4.1.6 Slow Clock Requirements

Characteristics	Condition	Sym	Min	Typ	Max	Unit
Input slow clock frequency				32768		Hz
Input slow clock accuracy (Initial + temp + aging)	*Bluetooth*				±250	ppm
	ANT				±50	
Input transition time t_r and t_f (10% to 90%)		t_r and t_f			200	ns
Frequency input duty cycle			15%	50%	85%	
Slow clock input voltage limits	Square wave, DC-coupled	V_{IH}	0.65 × VDD_IO		VDD_IO	V peak
		V_{IL}	0		0.35 × VDD_IO	V peak
Input impedance			1			MΩ
Input capacitance					5	pF

4.1.7 External Fast Clock Crystal Requirements and Operation

Characteristics	Condition	Sym	Min	Typ	Max	Unit
Supported crystal frequencies		f_{in}		26		MHz
Frequency accuracy (Initial + temperature + aging)					±20	ppm
Crystal oscillator negative resistance	26 MHz, external capacitance = 8 pF I_{osc} = 0.5 mA		650	940		Ω
	26 MHz, external capacitance = 20 pF I_{osc} = 2.2 mA		490	710		

4.1.8 Fast Clock Source Requirements (–40°C to +85°C)

Characteristics	Condition		Sym	Min	Typ	Max	Unit
Supported frequencies			F_{REF}		26		MHz
Reference frequency accuracy	Initial + temp + aging					±20	ppm
Fast clock input voltage limits	Square wave, DC-coupled	V_{IL}		–0.2		0.37	V
		V_{IH}		1.0		2.1	V
	Sine wave, AC-coupled			0.4		1.6	V_{p-p}
	Sine wave, DC-coupled			0.4		1.6	V_{p-p}
	Sine wave input limits, DC-coupled			0		1.6	V
Fast clock input rise time (as % of clock period)	Square wave, DC-coupled					10%	
Duty cycle				35%	50%	65%	
Phase noise for 26 MHz	@ offset = 1 kHz					–123.4	dBc/Hz
	@ offset = 10 kHz					–133.4	
	@ offset = 100 kHz					–138.4	

Copyright © 2012–2014, Texas Instruments Incorporated

4.2 *Bluetooth* BR/EDR RF Performance

All parameters in this section that are fast-clock dependent are verified using a 26-MHz XTAL under a temperature range from –20°C to 70°C and an RF load of 50 Ω at the BT_RF port.

4.2.1 Bluetooth Receiver—In-Band Signals

Characteristics	Condition		Min	Typ	Max	*Bluetooth* Specification	Unit
Operation frequency range			2402		2480		MHz
Channel spacing				1			MHz
Input impedance				50			Ω
Sensitivity, dirty TX on[1]	GFSK, BER = 0.1%		–91.5	–95		–70	dBm
	Pi/4-DQPSK, BER = 0.01%		–90.5	–94.5		–70	
	8DPSK, BER = 0.01%		–81	–87.5		–70	
BER error floor at sensitivity + 10 dB, dirty TX off	Pi/4-DQPSK		1E–6	1E–7		1E–5	
	8DPSK		1E–6			1E–5	
Maximum usable input power	GFSK, BER = 0.1%		–5			–20	dBm
	Pi/4-DQPSK, BER = 0.1%		–10				
	8DPSK, BER = 0.1%		–10				
Intermodulation characteristics	Level of interferers (for n = 3, 4, and 5)		–36	–30		–39	dBm
C/I performance[2]	GFSK, co-channel			8	10	11	dB
	EDR, co-channel	Pi/4-DQPSK		9.5	11	13	
Image = –1 MHz		8DPSK		16.5	20	21	
	GFSK, adjacent ±1 MHz			–10	–5	0	
	EDR, adjacent ±1 MHz, (image)	Pi/4-DQPSK		–10	–5	0	
		8DPSK		–5	–1	5	
	GFSK, adjacent +2 MHz			–38	–35	–30	
	EDR, adjacent, +2 MHz	Pi/4-DQPSK		–38	–35	–30	
		8DPSK		–38	–30	–25	
	GFSK, adjacent –2 MHz			–28	–20	–20	
	EDR, adjacent –2 MHz	Pi/4-DQPSK		–28	–20	–20	
		8DPSK		–22	–13	–13	
	GFSK, adjacent ≥ |±3| MHz			–45	–43	–40	
	EDR, adjacent ≥ |±3| MHz	Pi/4-DQPSK		–45	–43	–40	
		8DPSK		–44	–36	–33	
RF return loss				–10			dB
RX mode LO leakage	Frf = (received RF – 0.6 MHz)			–63	–58		dBm

(1) Sensitivity degradation up to 3 dB may occur for minimum and typical values where the *Bluetooth* frequency is a harmonic of the fast clock.
(2) Numbers show ratio of desired signal to interfering signal. Smaller numbers indicate better C/I performance.

4.2.2 Bluetooth Receiver—General Blocking

Characteristics	Condition	Min	Typ	Unit
Blocking performance over full range, according to *Bluetooth* specification [1]	30 to 2000 MHz		–6	dBm
	2000 to 2399 MHz		–6	
	2484 to 3000 MHz		–6	
	3 to 12.75 GHz		–6	

(1) Exceptions are taken out of the total 24 allowed in the *Bluetooth* specification.

Copyright © 2012–2014, Texas Instruments Incorporated

4.2.3 Bluetooth Transmitter—GFSK

Characteristics	Min	Typ	Max	*Bluetooth* Specification	Unit
Maximum RF output power(1)	10	12			dBm
Power variation over *Bluetooth* band	–1		1		dB
Gain control range		30			dB
Power control step	2	5	8	2 to 8	
Adjacent channel power |M–N| = 2		–45	–39	≤ –20	dBm
Adjacent channel power |M–N| > 2		–50	–42	≤ –40	

(1) To modify maximum output power, use an HCI VS command.

4.2.4 Bluetooth Transmitter—EDR

Characteristics		Min	Typ	Max	*Bluetooth* Specification	Unit
Maximum RF output power(1)	Pi/4-DQPSK	6	8			dBm
	8DPSK	6	8			
Relative power		–2		1	–4 to +1	dB
Power variation over *Bluetooth* band		–1		1		
Gain control range			30			
Power control step		2	5	8	2 to 8	
Adjacent channel power |M–N| = 1			–36	–30	≤ –26	dBc
Adjacent channel power |M–N| = 2 (2)			–30	–23	≤ –20	dBm
Adjacent channel power |M–N| > 2 (2)			–42	–40	≤ –40	dBm

(1) To modify maximum output power, use an HCI VS command.
(2) Assumes 3-dB insertion loss from *Bluetooth* RF ball to antenna

4.2.5 Bluetooth Modulation—GFSK

Characteristics	Condition		Sym	Min	Typ	Max	*Bluetooth* Specification	Unit
–20 dB bandwidth	GFSK				925	995	≤ 1000	kHz
Modulation characteristics	Δf1avg	Mod data = 4 1s, 4 0s: 111100001111...	F1 avg	150	165	170	140 to 175	kHz
	Δf2max ≥ limit for at least 99.9% of all Δf2max	Mod data = 1010101...	F2 max	115	130		> 115	kHz
	Δf2avg, Δf1avg			85	88		> 80	%
Absolute carrier frequency drift	DH1			–25		25	< ±25	kHz
	DH3 and DH5			–35		35	< ±40	
Drift rate						15	< 20	kHz/ 50 µs
Initial carrier frequency tolerance	f0 – fTX			–75		75	< ±75	kHz

Copyright © 2012–2014, Texas Instruments Incorporated

4.2.6 *Bluetooth* Modulation—EDR

Characteristics	Condition	Min	Typ	Max	*Bluetooth* Specification	Unit
Carrier frequency stability				±5	≤ 10	kHz
Initial carrier frequency tolerance				±75	±75	kHz
Rms DEVM (1)	Pi/4-DQPSK		6	15	20	%
	8DPSK		6	13	13	
99% DEVM(1)	Pi/4-DQPSK			30	30	
	8DPSK			20	20	
Peak DEVM (1)	Pi/4-DQPSK		14	30	35	
	8DPSK		16	25	25	

(1) Max performance refers to maximum TX power.

4.2.7 *Bluetooth* Transmitter—Out-of-Band and Spurious Emissions

Characteristics	Condition	Typ	Max	Unit
Second harmonic(1)	Measured at maximum output power	–14	–2	dBm
Third harmonic(1)		–10	–6	dBm
Fourth harmonics(1)		–19	–11	dBm

(1) Meets FCC and ETSI requirements with external filter shown in Figure 5-1

4.3 *Bluetooth* LE RF Performance

All parameters in this section that are fast-clock dependent are verified using a 26-MHz XTAL under a temperature range from –20°C to 70°C and an RF load of 50 Ω at the BT_RF port.

4.3.1 BLE Receiver—In-Band Signals

Characteristic	Condition	Min	Typ	Max	BLE Specification	Unit
Operation frequency range		2402		2480		MHz
Channel spacing			2			MHz
Input impedance			50			Ω
Sensitivity, dirty TX on(1)	PER = 30.8%; dirty TX on	–93	–96		≤ –70	dBm
Maximum usable input power	GMSK, PER = 30.8%	–5			≥ –10	dBm
Intermodulation characteristics	Level of interferers (for n = 3, 4, 5)	–36	–30		≥ –50	dBm
C/I performance(2) Image = –1 MHz	GMSK, co-channel		8	12	≤ 21	dB
	GMSK, adjacent ±1 MHz		–5	0	≤ 15	
	GMSK, adjacent +2 MHz		–45	–38	≤ –17	
	GMSK, adjacent –2 MHz		–22	–15	≤ –15	
	GMSK, adjacent ≥ |±3| MHz		–47	–40	≤ –27	
RX mode LO leakage	Frf = (received RF – 0.6 MHz)		–63	–58		dBm

(1) Sensitivity degradation up to 3 dB may occur where the BLE frequency is a harmonic of the fast clock.
(2) Numbers show wanted signal-to-interfering signal ratio. Smaller numbers indicate better C/I performance.

Copyright © 2012–2014, Texas Instruments Incorporated

4.3.2 BLE Receiver—General Blocking

Characteristics	Condition	Min	Typ	BLE Specification	Unit
Blocking performance over full range, according to BLE specification(1)	30 to 2000 MHz		–15	≥ –30	dBm
	2000 to 2399 MHz		–15	≥ –35	
	2484 to 3000 MHz		–15	≥ –35	
	3 to 12.75 GHz		–15	≥ –30	

(1) Exceptions are taken out of the total 10 allowed in the BLE specification.

4.3.3 BLE Transmitter

Characteristics	Min	Typ	Max	BLE Specification	Unit
Maximum RF output power(1)	10	12(2)		≤10	dBm
Power variation over BLE band	–1		1		dB
Adjacent channel power |M-N| = 2		–45	–39	≤ –20	dBm
Adjacent channel power |M-N| > 2		–50	–42	≤ –30	

(1) To modify maximum output power, use an HCI VS command.
(2) To achieve the BLE specification of 10-dBm maximum, an insertion loss of > 2 dB is assumed between the RF ball and the antenna. Otherwise, use an HCI VS command to modify the output power.

4.3.4 BLE Modulation

Characteristics	Condition		Sym	Min	Typ	Max	BLE Specification	Unit
Modulation characteristics	Δf1avg	Mod data = 4 1s, 4 0s: 1111000011110000...	Δf1 avg	240	250	260	225 to 275	kHz
	Δf2max ≥ limit for at least 99.9% of all Δf2max	Mod data = 1010101...	Δf2 max	185	210		≥ 185	kHz
	Δf2avg, Δf1avg			0.85	0.9		≥ 0.8	
Absolute carrier frequency drift				–25		25	≤ ±50	kHz
Drift rate						15	≤ 20	kHz/50 ms
Initial carrier frequency tolerance				–75		75	≤ ±100	kHz

4.3.5 BLE Transceiver, Out-Of-Band and Spurious Emissions

See Section 4.2.7, *Bluetooth Transmitter, Out-of-Band and Spurious Emissions*.

4.4 Interface Specifications

4.4.1 UART

Figure 4-1 shows the UART timing diagram. Table 4-1 lists the UART timing characteristics.

Copyright © 2012–2014, Texas Instruments Incorporated

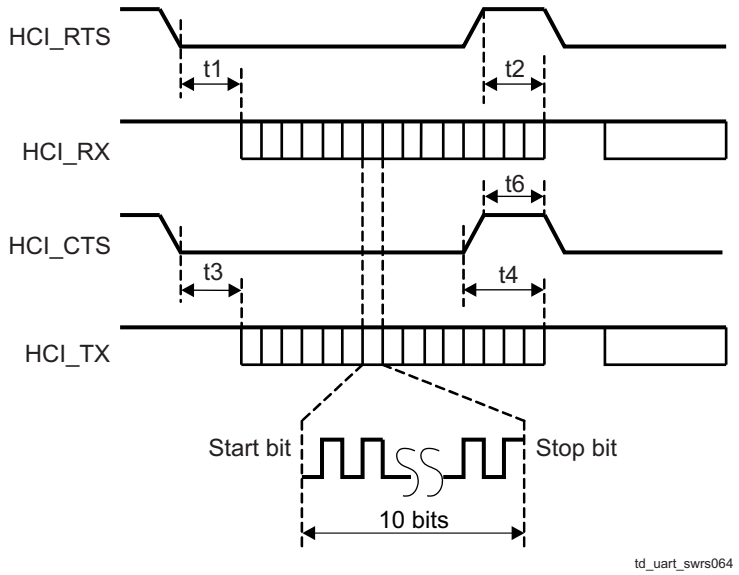

Figure 4-1. UART Timing

Table 4-1. UART Timing Characteristics

Symbol	Characteristics	Condition	Min	Typ	Max	Unit
	Baud rate		37.5		4000	kbps
	Baud rate accuracy per byte	Receive and transmit	–2.5		1.5	%
	Baud rate accuracy per bit	Receive and transmit	–12.5		12.5	%
t3	CTS low to TX_DATA on		0	2		µs
t4	CTS high to TX_DATA off	Hardware flow control			1	byte
t6	CTS-high pulse width		1			bit
t1	RTS low to RX_DATA on		0	2		µs
t2	RTS high to RX_DATA off	Interrupt set to 1/4 FIFO			16	byte

Figure 4-2 shows the UART data frame. Table 4-2 describes the symbols used in Figure 4-2.

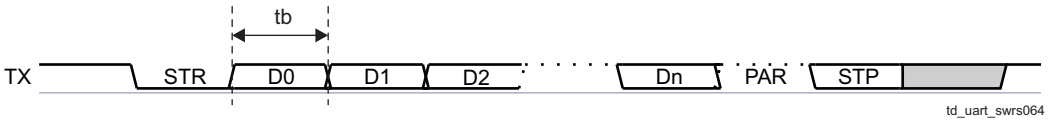

Figure 4-2. Data Frame

Table 4-2. Data Frame Key

Symbol	Description
STR	Start bit
D0...Dn	Data bits (LSB first)
PAR	Parity bit (optional)
STP	Stop bit

4.4.2 PCM

Figure 4-3 shows the interface timing for the PCM. Table 4-3 and Table 4-4 list the associated master and slave parameters, respectively.

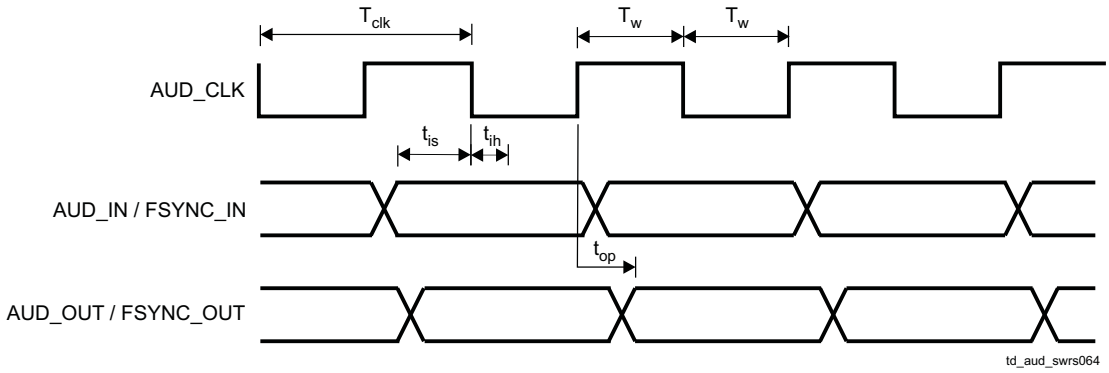

Figure 4-3. PCM Interface Timing

Table 4-3. PCM Master

Symbol	Parameter	Condition	Min	Max	Unit
T_{clk}	Cycle time		244.14 (4.096 MHz)	15625 (64 kHz)	ns
T_w	High or low pulse width		50% of T_{clk} min		
t_{is}	AUD_IN setup time		25		
t_{ih}	AUD_IN hold time		0		
t_{op}	AUD_OUT propagation time	40-pF load	0	10	
t_{op}	FSYNC_OUT propagation time	40-pF load	0	10	

Table 4-4. PCM Slave

Symbol	Parameter	Condition	Min	Max	Unit
T_{clk}	Cycle time		66.67 (15 MHz)		ns
T_w	High or low pulse width		40% of T_{clk}		
T_{is}	AUD_IN setup time		8		
T_{ih}	AUD_IN hold time		0		
t_{is}	AUD_FSYNC setup time		8		
t_{ih}	AUD_FSYNC hold time		0		
t_{op}	AUD_OUT propagation time	40-pF load	0	21	

Copyright © 2012–2014, Texas Instruments Incorporated

5 Reference Design and BOM for Power and Radio Connections

Figure 5-1 shows the reference schematics for the CC256x device.

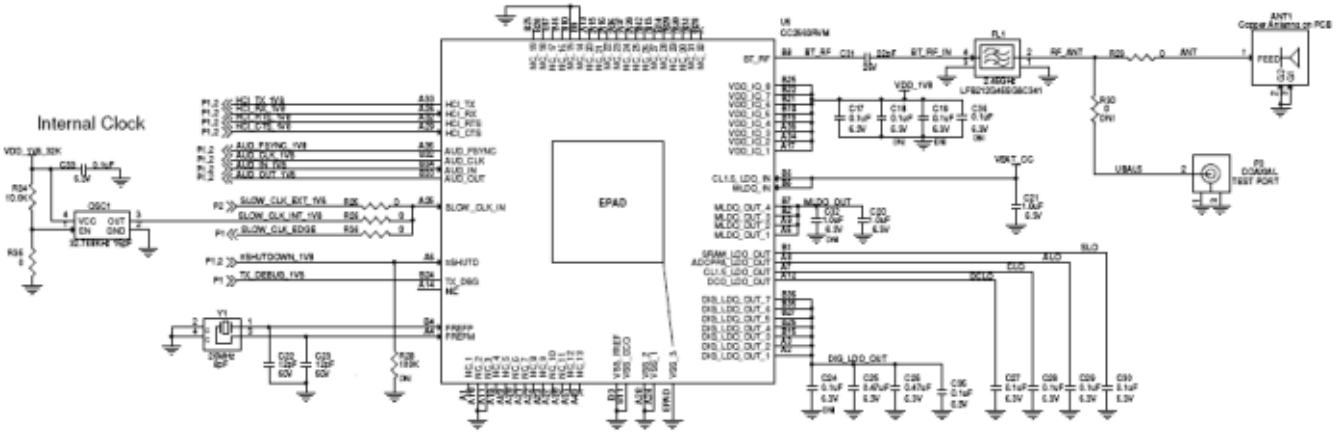

Figure 5-1. Reference Schematics

Table 5-1 lists the BOM for the CC256x device.

Table 5-1. Bill of Materials

Qty	Reference Des.	Value	Description	Manufacturer	Manufacturer Part Number	Alternate Part	Note
1	ANT1	NA	ANT_IIFA_CC2420_32mil_MIR	NA	IIFA_CC2420	Chip antenna	Copper antenna on PCB
6	Capacitor	0.1 µF	CAP CER 1.0-µF 6.3-V X5R 10% 0402	Kemet	C0402C104K9RACTU		
2	Capacitor	1.0 µF	CAP CER 10-pF 50-V 5% NP0 0402	Taiyo Yuden	JMK105BJ105KV-F		
2	Capacitor	12 pF	CAP CER 12 pF 6.3-V X5R 10% 0402	Murata Electronics	GRM1555C1H120JZ01D		
2	Capacitor	0.47 µF	CAP CER .47-µF 6.3-V X5R ±10% 0402	Taiyo Yuden	JMK105BJ474KV-F		
1	FL1	2.45 GHz	FILTER CER BAND PASS 2.45-GHZ SMD	Murata Electronics	LFB212G45SG8C341		Place brown marking up
1	OSC1	32,768 kHz 15 pF	OSC 32.768-kHZ 15-pF 1.5-V 3.3-V SMD	Abracon Corporation	ASH7K-32.768KHZ-T		Optional
1	U5	CC2560ARVM, CC2564RVM, CC2560BRVM, CC2564BRVM	*Bluetooth* BR/EDR/LE or ANT Single-Chip Solution	Texas Instruments	CC256xRVM		
1	Y1	26 MHz	Crystal, 26 MHz	NDK	NX2016SA	TZ1325D (Tai-Saw TST)	
1	C31	22 pF	CAP CER 22-PF 25-V 5% NP0 0201	Murata Electronics North America	GRM0335C1E220JD01D		

Copyright © 2012–2014, Texas Instruments Incorporated

6 mrQFN Mechanical Data

RVM (S-PVQFN-N76) PLASTIC QUAD FLATPACK NO-LEAD

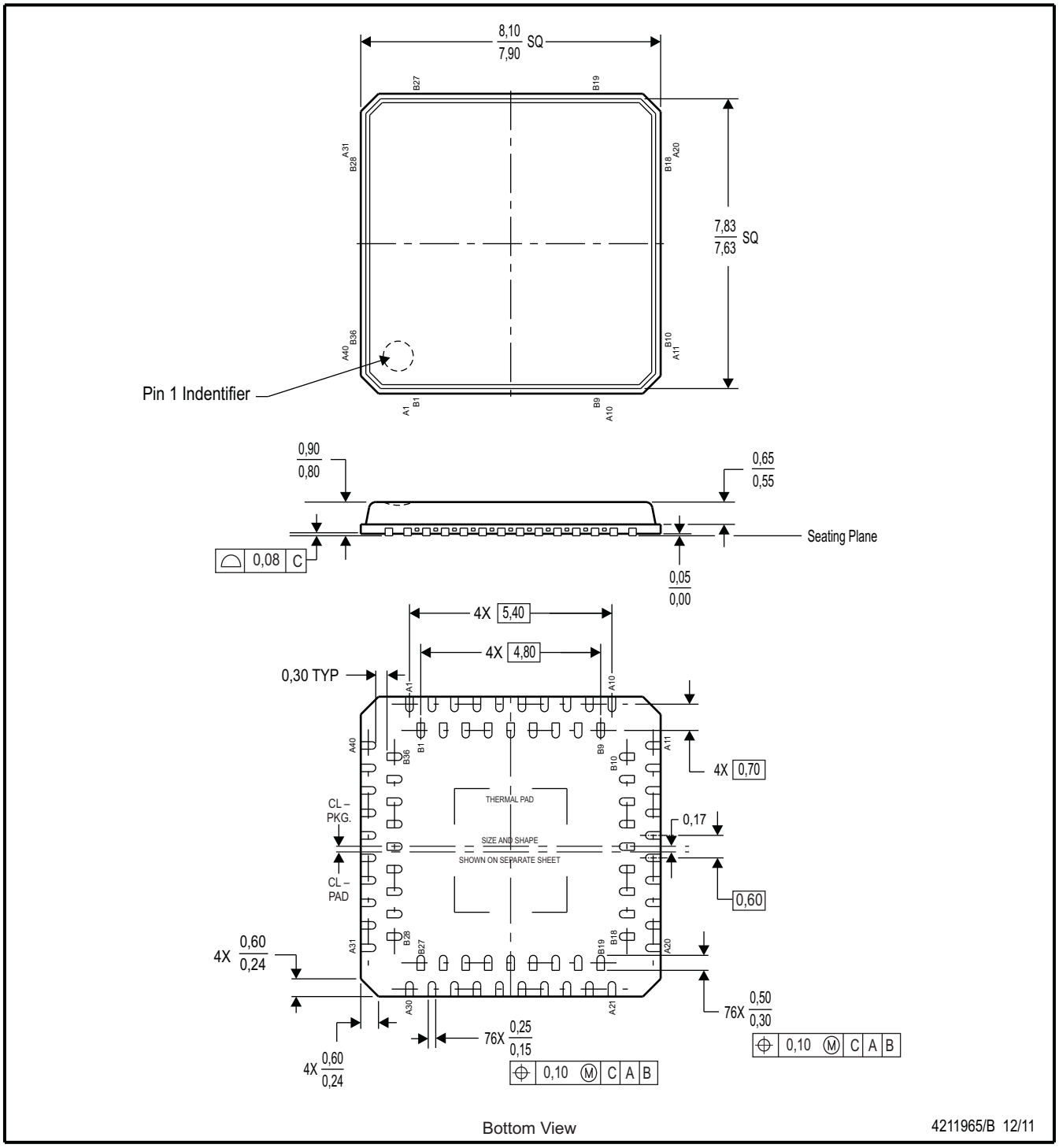

NOTES:
A. All linear dimensions are in millimeters. Dimensioning and tolerancing per ASME Y14.5-1994.
B. This drawing is subject to change without notice.
C. QFN (Quad Flatpack No-Lead) Package configuration.
D. The package thermal pad must be soldered to the board for thermal and mechanical performance.
E. See the additional figure in the Product Data Sheet for details regarding the exposed thermal pad features and dimensions.

SWRS115-001

Copyright © 2012–2014, Texas Instruments Incorporated

RVM (S-PVQFN-N76) PLASTIC QUAD FLATPACK NO-LEAD

THERMAL INFORMATION

This package incorporates an exposed thermal pad that is designed to be attached directly to an external heatsink. The thermal pad must be soldered directly to the printed circuit board (PCB). After soldering, the PCB can be used as a heatsink. In addition, through the use of thermal vias, the thermal pad can be attached directly to the appropriate copper plane shown in the electrical schematic for the device, or alternatively, can be attached to a special heatsink structure designed into the PCB. This design optimizes the heat transfer from the integrated circuit (IC).

For information on the Quad Flatpack No-Lead (QFN) package and its advantages, refer to Application Report, QFN/SON PCB Attachment, Texas Instruments Literature No. SLUA271. This document is available at www.ti.com.

The exposed thermal pad dimensions for this package are shown in the following illustration.

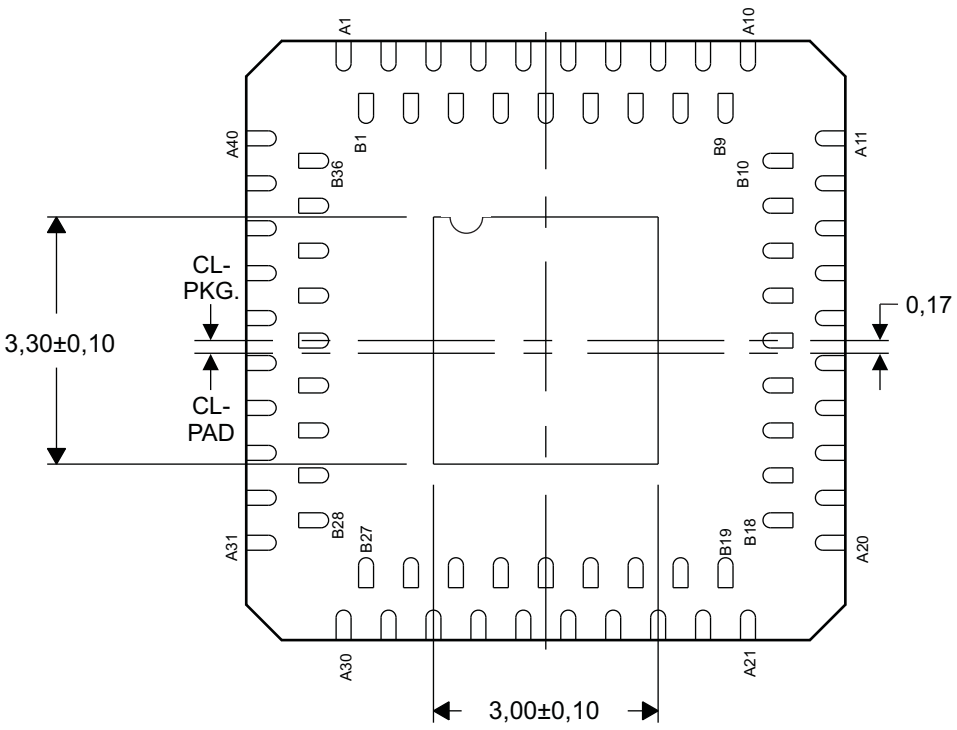

Bottom View

Exposed Thermal Pad Dimensions

4212066/B 12/11

NOTE: All linear dimensions are in millimeters

SWRS115-018

7 Chip Packaging and Ordering

7.1 Package and Ordering Information

The mrQFN packaging is 76 pins and a 0.6-mm pitch.

For detailed information, see Section 6, *mrQFN Mechanical Data*.

Table 7-1 lists the package and order information for the device family members.

Table 7-1. Package and Order Information

Device	Package Suffix	Pieces/Reel
CC2560ARVMT	RVM	250
CC2560ARVMR	RVM	2500
CC2564RVMT	RVM	250
CC2564RVMR	RVM	2500
CC2560BRVMT	RVM	250
CC2560BRVMR	RVM	2500
CC2564BRVMT	RVM	250
CC2564BRVMR	RVM	2500

Figure 7-1 shows the chip markings for the CC256x family.

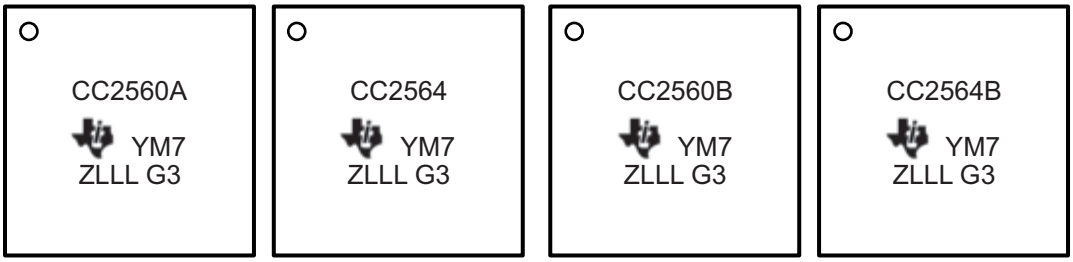

Y = Last digit of the year
M = Month in hex number, 1-C for Jan-Dec
7 = Primary site code for ANM
Z = Secondary site code for ANM
LLL = Assembly lot code
O = Pin 1 indicator

SWRS121-010

Figure 7-1. Chip Markings

7.1.1 Device Support Nomenclature

To designate the stages in the product development cycle, TI assigns prefixes to the part numbers. These prefixes represent evolutionary stages of product development from engineering prototypes through fully qualified production devices.

X Experimental, preproduction, sample or prototype device. Device may not meet all product qualification conditions and may not fully comply with TI specifications. Experimental/Prototype devices are shipped against the following disclaimer: "This product is still in development and is intended for internal evaluation purposes." Notwithstanding any provision to the contrary, TI makes no warranty expressed, implied, or statutory, including any implied warranty of merchantability of fitness for a specific purpose, of this device.

null Device is qualified and released to production. TI's standard warranty applies to production devices.

Copyright © 2012–2014, Texas Instruments Incorporated

7.2 Empty Tape Portion

Figure 7-2 shows the empty portion of the carrier tape.

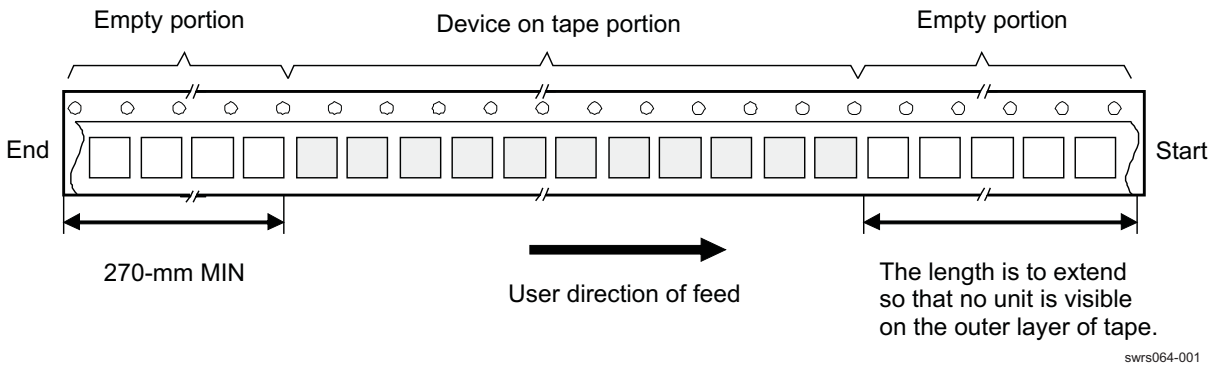

Figure 7-2. Carrier Tape and Pockets

7.3 Device Quantity and Direction

When pulling out the tape, the A1 corner is on the left side (see Figure 7-3).

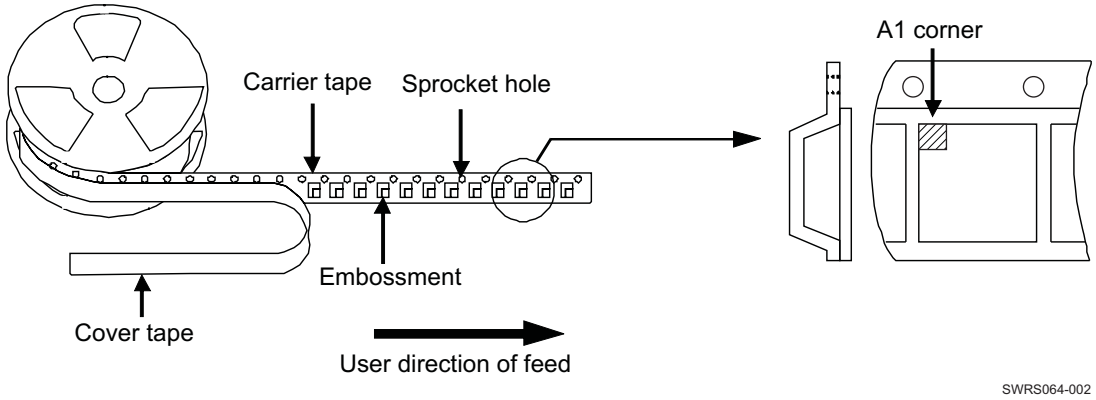

Figure 7-3. Direction of Device

7.4 Insertion of Device

Figure 7-4 shows the insertion of the device.

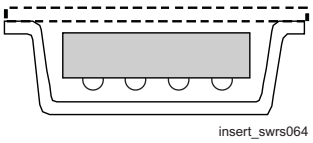

Figure 7-4. Insertion of Device

7.5 Tape Specification

The dimensions of the tape are:

- Tape width: 16 mm
- Cover tape: The cover tape does not cover the index hole and does not shift to outside from the carrier tape.
- Tape structure: The carrier tape is made of plastic. The device is put in the embossed area of the carrier tape and covered by the cover tape, which is made of plastic.
- ESD countermeasure: The plastic material used in the carrier tape and the cover tape is static dissipative.

7.6 Reel Specification

Figure 7-5 shows the reel specifications:

- 330-mm reel, 16-mm width tape
- Reel material: Polystyrene (static dissipative/antistatic)

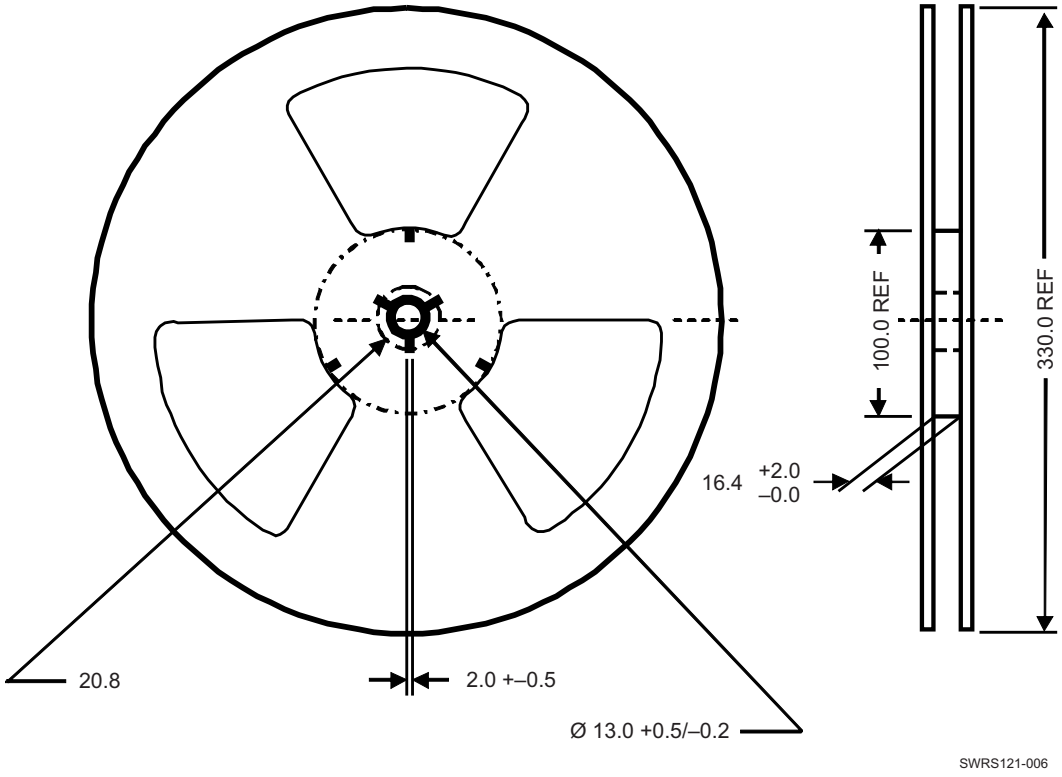

Figure 7-5. Reel Dimensions (mm)

7.7 Packing Method

The end of the leader tape is secured by drafting tape. The reel is packed in a moisture barrier bag fastened by heat-sealing (see Figure 7-6).

Copyright © 2012–2014, Texas Instruments Incorporated

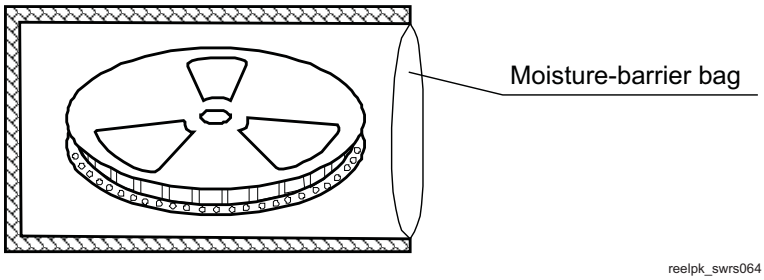

Figure 7-6. Reel Packing Method

CAUTION

This integrated circuit can be damaged by ESD. Texas Instruments recommends that all integrated circuits be handled with appropriate precautions. Failure to observe proper handling and installation procedures can cause damage. ESD damage can range from subtle performance degradation to complete device failure. Precision integrated circuits may be more susceptible to damage because very small parametric changes could cause devices not to meet their published specifications.

7.8 Packing Specification

7.8.1 Reel Box

Each moisture-barrier bag is packed into a reel box, as shown in Figure 7-7.

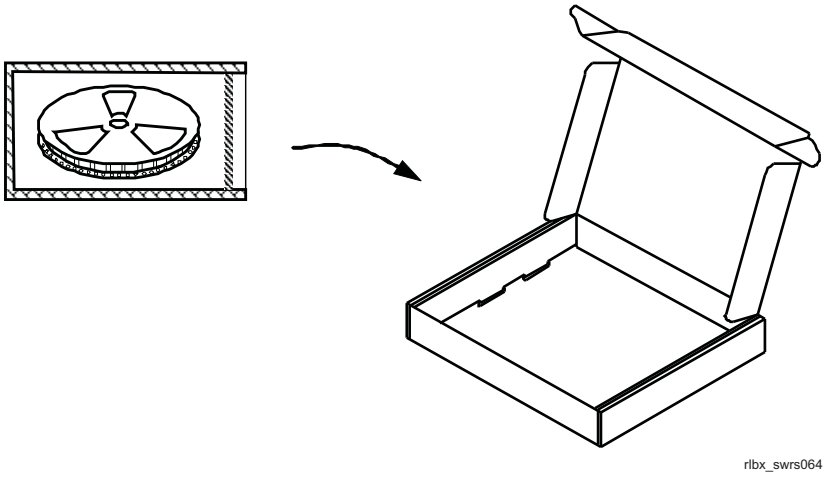

Figure 7-7. Reel Box (Carton)

7.8.2 Reel Box Material

The reel box is made from corrugated fiberboard.

7.8.3 Shipping Box

If the shipping box has excess space, filler (such as cushion) is added.

Figure 7-8 shows a typical shipping box.

NOTE

The size of the shipping box may vary depending on the number of reel boxes packed.

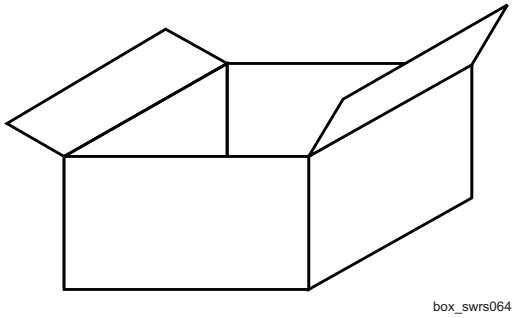

Figure 7-8. Shipping Box (Carton)

7.8.4 Shipping Box Material

The shipping box is made from corrugated fiberboard.

Copyright © 2012–2014, Texas Instruments Incorporated

PACKAGING INFORMATION

Orderable Device	Status (1)	Package Type	Package Drawing	Pins	Package Qty	Eco Plan (2)	Lead/Ball Finish (6)	MSL Peak Temp (3)	Op Temp (°C)	Device Marking (4/5)	Samples
CC2560ARVMR	ACTIVE	VQFN	RVM	76	2500	Green (RoHS & no Sb/Br)	CU SN	Level-3-260C-168 HR	-40 to 85	CC256 0A	Samples
CC2560ARVMT	ACTIVE	VQFN	RVM	76	250	Green (RoHS & no Sb/Br)	CU SN	Level-3-260C-168 HR	-40 to 85	CC256 0A	Samples
CC2560BRVMR	ACTIVE	VQFN	RVM	76	2500	TBD	Call TI	Call TI			Samples
CC2564BRVMR	ACTIVE	VQFN	RVM	76	2500	Green (RoHS & no Sb/Br)	CU SN	Level-3-260C-168 HR		CC2564B	Samples
CC2564BRVMT	ACTIVE	VQFN	RVM	76	250	Green (RoHS & no Sb/Br)	CU SN	Level-3-260C-168 HR		CC2564B	Samples
CC2564BYFVT	ACTIVE	DSBGA	YFV	54	250	Green (RoHS & no Sb/Br)	Call TI	Level-1-260C-UNLIM		CC2564B	Samples
CC2564RVMR	ACTIVE	VQFN	RVM	76	2500	Green (RoHS & no Sb/Br)	CU SN	Level-3-260C-168 HR	-40 to 85	CC256 4	Samples
CC2564RVMT	ACTIVE	VQFN	RVM	76	250	Green (RoHS & no Sb/Br)	CU SN	Level-3-260C-168 HR	-40 to 85	CC256 4	Samples

(1) The marketing status values are defined as follows:
ACTIVE: Product device recommended for new designs.
LIFEBUY: TI has announced that the device will be discontinued, and a lifetime-buy period is in effect.
NRND: Not recommended for new designs. Device is in production to support existing customers, but TI does not recommend using this part in a new design.
PREVIEW: Device has been announced but is not in production. Samples may or may not be available.
OBSOLETE: TI has discontinued the production of the device.

(2) Eco Plan - The planned eco-friendly classification: Pb-Free (RoHS), Pb-Free (RoHS Exempt), or Green (RoHS & no Sb/Br) - please check http://www.ti.com/productcontent for the latest availability information and additional product content details.
TBD: The Pb-Free/Green conversion plan has not been defined.
Pb-Free (RoHS): TI's terms "Lead-Free" or "Pb-Free" mean semiconductor products that are compatible with the current RoHS requirements for all 6 substances, including the requirement that lead not exceed 0.1% by weight in homogeneous materials. Where designed to be soldered at high temperatures, TI Pb-Free products are suitable for use in specified lead-free processes.
Pb-Free (RoHS Exempt): This component has a RoHS exemption for either 1) lead-based flip-chip solder bumps used between the die and package, or 2) lead-based die adhesive used between the die and leadframe. The component is otherwise considered Pb-Free (RoHS compatible) as defined above.
Green (RoHS & no Sb/Br): TI defines "Green" to mean Pb-Free (RoHS compatible), and free of Bromine (Br) and Antimony (Sb) based flame retardants (Br or Sb do not exceed 0.1% by weight in homogeneous material)

(3) MSL, Peak Temp. - The Moisture Sensitivity Level rating according to the JEDEC industry standard classifications, and peak solder temperature.

(4) There may be additional marking, which relates to the logo, the lot trace code information, or the environmental category on the device.

(5) Multiple Device Markings will be inside parentheses. Only one Device Marking contained in parentheses and separated by a "~" will appear on a device. If a line is indented then it is a continuation of the previous line and the two combined represent the entire Device Marking for that device.

(6) Lead/Ball Finish - Orderable Devices may have multiple material finish options. Finish options are separated by a vertical ruled line. Lead/Ball Finish values may wrap to two lines if the finish value exceeds the maximum column width.

Important Information and Disclaimer: The information provided on this page represents TI's knowledge and belief as of the date that it is provided. TI bases its knowledge and belief on information provided by third parties, and makes no representation or warranty as to the accuracy of such information. Efforts are underway to better integrate information from third parties. TI has taken and continues to take reasonable steps to provide representative and accurate information but may not have conducted destructive testing or chemical analysis on incoming materials and chemicals. TI and TI suppliers consider certain information to be proprietary, and thus CAS numbers and other limited information may not be available for release.

In no event shall TI's liability arising out of such information exceed the total purchase price of the TI part(s) at issue in this document sold by TI to Customer on an annual basis.

IMPORTANT NOTICE

Texas Instruments Incorporated and its subsidiaries (TI) reserve the right to make corrections, enhancements, improvements and other changes to its semiconductor products and services per JESD46, latest issue, and to discontinue any product or service per JESD48, latest issue. Buyers should obtain the latest relevant information before placing orders and should verify that such information is current and complete. All semiconductor products (also referred to herein as “components”) are sold subject to TI’s terms and conditions of sale supplied at the time of order acknowledgment.

TI warrants performance of its components to the specifications applicable at the time of sale, in accordance with the warranty in TI’s terms and conditions of sale of semiconductor products. Testing and other quality control techniques are used to the extent TI deems necessary to support this warranty. Except where mandated by applicable law, testing of all parameters of each component is not necessarily performed.

TI assumes no liability for applications assistance or the design of Buyers’ products. Buyers are responsible for their products and applications using TI components. To minimize the risks associated with Buyers’ products and applications, Buyers should provide adequate design and operating safeguards.

TI does not warrant or represent that any license, either express or implied, is granted under any patent right, copyright, mask work right, or other intellectual property right relating to any combination, machine, or process in which TI components or services are used. Information published by TI regarding third-party products or services does not constitute a license to use such products or services or a warranty or endorsement thereof. Use of such information may require a license from a third party under the patents or other intellectual property of the third party, or a license from TI under the patents or other intellectual property of TI.

Reproduction of significant portions of TI information in TI data books or data sheets is permissible only if reproduction is without alteration and is accompanied by all associated warranties, conditions, limitations, and notices. TI is not responsible or liable for such altered documentation. Information of third parties may be subject to additional restrictions.

Resale of TI components or services with statements different from or beyond the parameters stated by TI for that component or service voids all express and any implied warranties for the associated TI component or service and is an unfair and deceptive business practice. TI is not responsible or liable for any such statements.

Buyer acknowledges and agrees that it is solely responsible for compliance with all legal, regulatory and safety-related requirements concerning its products, and any use of TI components in its applications, notwithstanding any applications-related information or support that may be provided by TI. Buyer represents and agrees that it has all the necessary expertise to create and implement safeguards which anticipate dangerous consequences of failures, monitor failures and their consequences, lessen the likelihood of failures that might cause harm and take appropriate remedial actions. Buyer will fully indemnify TI and its representatives against any damages arising out of the use of any TI components in safety-critical applications.

In some cases, TI components may be promoted specifically to facilitate safety-related applications. With such components, TI’s goal is to help enable customers to design and create their own end-product solutions that meet applicable functional safety standards and requirements. Nonetheless, such components are subject to these terms.

No TI components are authorized for use in FDA Class III (or similar life-critical medical equipment) unless authorized officers of the parties have executed a special agreement specifically governing such use.

Only those TI components which TI has specifically designated as military grade or “enhanced plastic” are designed and intended for use in military/aerospace applications or environments. Buyer acknowledges and agrees that any military or aerospace use of TI components which have ***not*** been so designated is solely at the Buyer's risk, and that Buyer is solely responsible for compliance with all legal and regulatory requirements in connection with such use.

TI has specifically designated certain components as meeting ISO/TS16949 requirements, mainly for automotive use. In any case of use of non-designated products, TI will not be responsible for any failure to meet ISO/TS16949.

Products		**Applications**	
Audio	www.ti.com/audio	Automotive and Transportation	www.ti.com/automotive
Amplifiers	amplifier.ti.com	Communications and Telecom	www.ti.com/communications
Data Converters	dataconverter.ti.com	Computers and Peripherals	www.ti.com/computers
DLP® Products	www.dlp.com	Consumer Electronics	www.ti.com/consumer-apps
DSP	dsp.ti.com	Energy and Lighting	www.ti.com/energy
Clocks and Timers	www.ti.com/clocks	Industrial	www.ti.com/industrial
Interface	interface.ti.com	Medical	www.ti.com/medical
Logic	logic.ti.com	Security	www.ti.com/security
Power Mgmt	power.ti.com	Space, Avionics and Defense	www.ti.com/space-avionics-defense
Microcontrollers	microcontroller.ti.com	Video and Imaging	www.ti.com/video
RFID	www.ti-rfid.com		
OMAP Applications Processors	www.ti.com/omap	**TI E2E Community**	e2e.ti.com
Wireless Connectivity	www.ti.com/wirelessconnectivity		

Mailing Address: Texas Instruments, Post Office Box 655303, Dallas, Texas 75265
Copyright © 2014, Texas Instruments Incorporated