2.5-V PHASE-LOCKED-LOOP CLOCK DRIVER

FEATURES

- **Spread-Spectrum Clock Compatible**
- **Operating Frequency: 60 MHz to 220 MHz**
- **Low Jitter (Cycle-Cycle): ±35 ps**
- **Low Static Phase Offset: ±50 ps**
- **Low Jitter (Period): ±30 ps**
- **1-to-10 Differential Clock Distribution (SSTL2)**
- **Best in Class for $V_{OX} = V_{DD}/2 \pm 0.1$ V**
- **Operates From Dual 2.6-V or 2.5-V Supplies**
- **Available in a 40-Pin MLF Package, 48-Pin TSSOP Package, 56-Ball MicroStar Junior™ BGA Package**
- **Consumes < 100-μA Quiescent Current**
- **External Feedback Pins (FBIN, $\overline{\text{FBIN}}$) Are Used to Synchronize the Outputs to the Input Clocks**
- **Meets/Exceeds JEDEC Standard (JESD82-1) For DDRI-200/266/333 Specification**
- **Meets/Exceeds Proposed DDRI-400 Specification (JESD82-1A)**
- **Enters Low-Power Mode When No CLK Input Signal Is Applied or PWRDWN Is Low**

APPLICATIONS

- **DDR Memory Modules (DDR400/333/266/200)**
- **Zero-Delay Fan-Out Buffer**

DESCRIPTION

The CDCVF857 is a high-performance, low-skew, low-jitter, zero-delay buffer that distributes a differential clock input pair (CLK, $\overline{\text{CLK}}$) to 10 differential pairs of clock outputs (Y[0:9], $\overline{\text{Y[0:9]}}$) and one differential pair of feedback clock outputs (FBOUT, $\overline{\text{FBOUT}}$). The clock outputs are controlled by the clock inputs (CLK, $\overline{\text{CLK}}$), the feedback clocks (FBIN, $\overline{\text{FBIN}}$), and the analog power input (AVDD). When $\overline{\text{PWRDWN}}$ is high, the outputs switch in phase and frequency with CLK. When $\overline{\text{PWRDWN}}$ is low, all outputs are disabled to a high-impedance state (3-state) and the PLL is shut down (low-power mode). The device also enters this low-power mode when the input frequency falls below a suggested detection frequency that is below 20 MHz (typical 10 MHz). An input frequency detection circuit detects the low frequency condition and, after applying a >20-MHz input signal, this detection circuit turns the PLL on and enables the outputs.

When AV_{DD} is strapped low, the PLL is turned off and bypassed for test purposes. The CDCVF857 is also able to track spread spectrum clocking for reduced EMI.

Because the CDCVF857 is based on PLL circuitry, it requires a stabilization time to achieve phase-lock of the PLL. This stabilization time is required following power up. The CDCVF857 is characterized for both commercial and industrial temperature ranges.

AVAILABLE OPTIONS

T_A	TSSOP (DGG)	40-Pin MLF	56-Ball BGA(1)
–40°C to 85°C	CDCVF857DGG	CDCVF857RTB	CDCVF857GQL
–40°C to 85°C		CDCVF857RHA	CDCVF857ZQL

(1) Maximum load recommended is 12 pf for 200 MHz. At 12-pf load, maximum T_A allowed is 70°C.

Please be aware that an important notice concerning availability, standard warranty, and use in critical applications of Texas Instruments semiconductor products and disclaimers thereto appears at the end of this data sheet.

MicroStar Junior is a trademark of Texas Instruments.

PRODUCTION DATA information is current as of publication date. Products conform to specifications per the terms of the Texas Instruments standard warranty. Production processing does not necessarily include testing of all parameters.

Copyright © 2003–2007, Texas Instruments Incorporated

FUNCTION TABLE
(Select Functions)

INPUTS				OUTPUTS				PLL
AVDD	$\overline{PWRDWN}$	CLK	$\overline{CLK}$	Y[0:9]	$\overline{Y[0:9]}$	FBOUT	$\overline{FBOUT}$	
GND	H	L	H	L	H	L	H	Bypassed/off
GND	H	H	L	H	L	H	L	Bypassed/off
X	L	L	H	Z	Z	Z	Z	Off
X	L	H	L	Z	Z	Z	Z	Off
2.5 V (nom)	H	L	H	L	H	L	H	On
2.5 V (nom)	H	H	L	H	L	H	L	On
2.5 V (nom)	X	<20 MHz	<20 MHz	Z	Z	Z	Z	Off

DGG PACKAGE
(TOP VIEW)

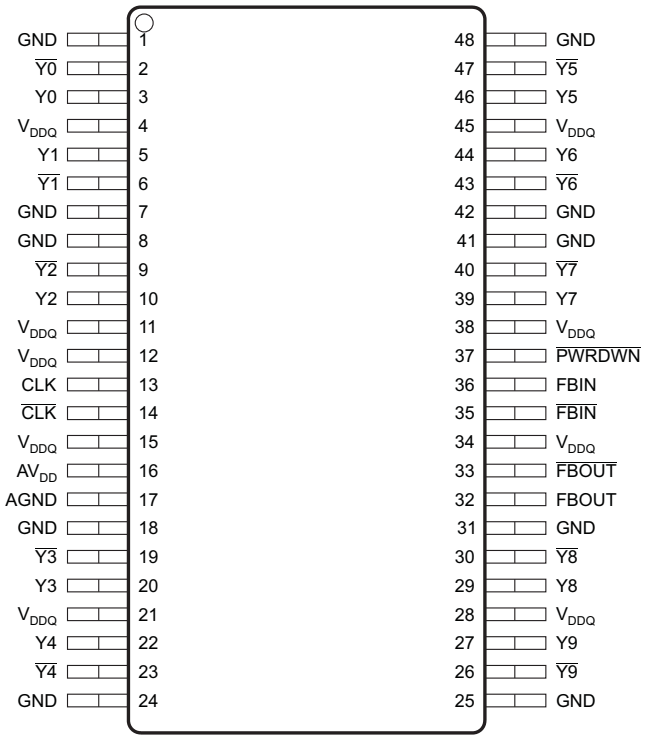

P0052-01

RHA/RTB PACKAGE
(TOP VIEW)

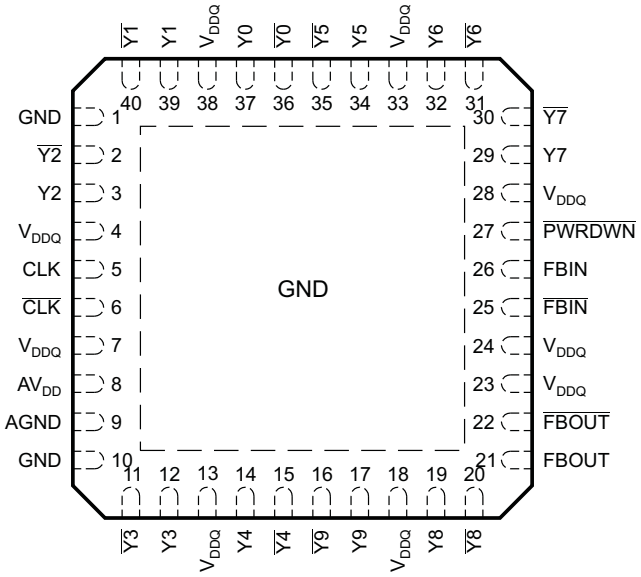

P0053-01

MicroStar Junior™ BGA (GQL/ZQL) PACKAGE
(TOP VIEW)

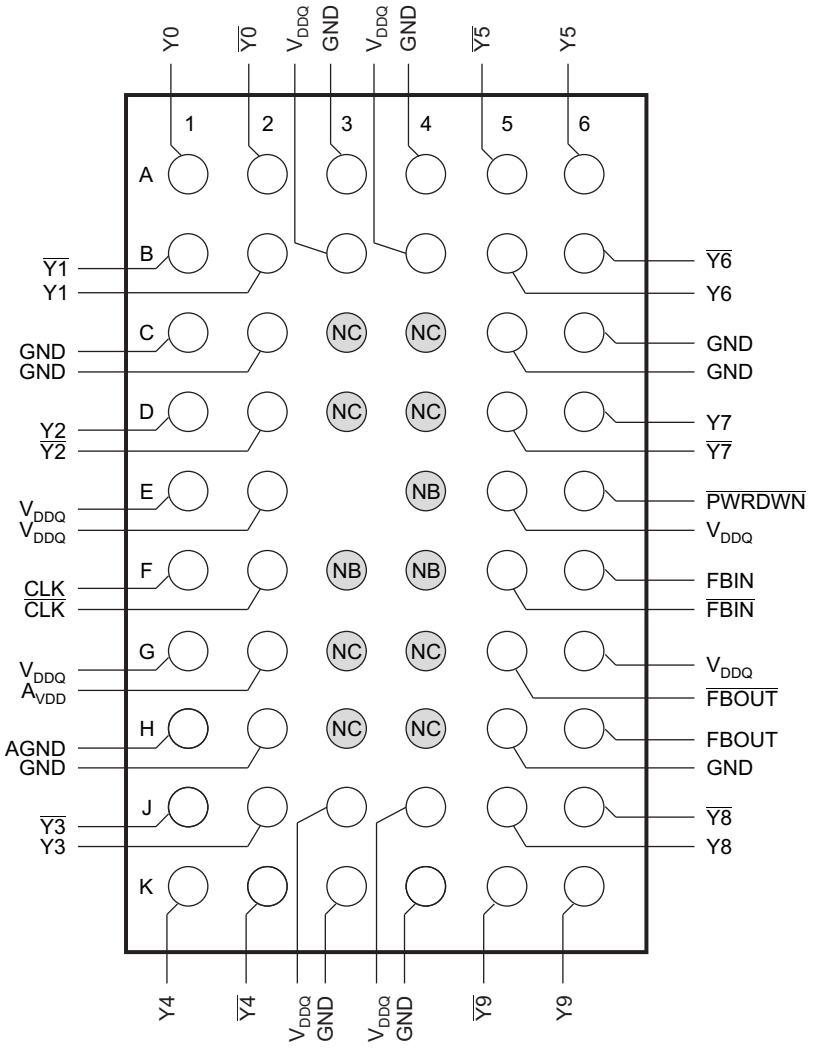

NB = No Ball
NC = No Connection

P0054-01

FUNCTIONAL BLOCK DIAGRAM

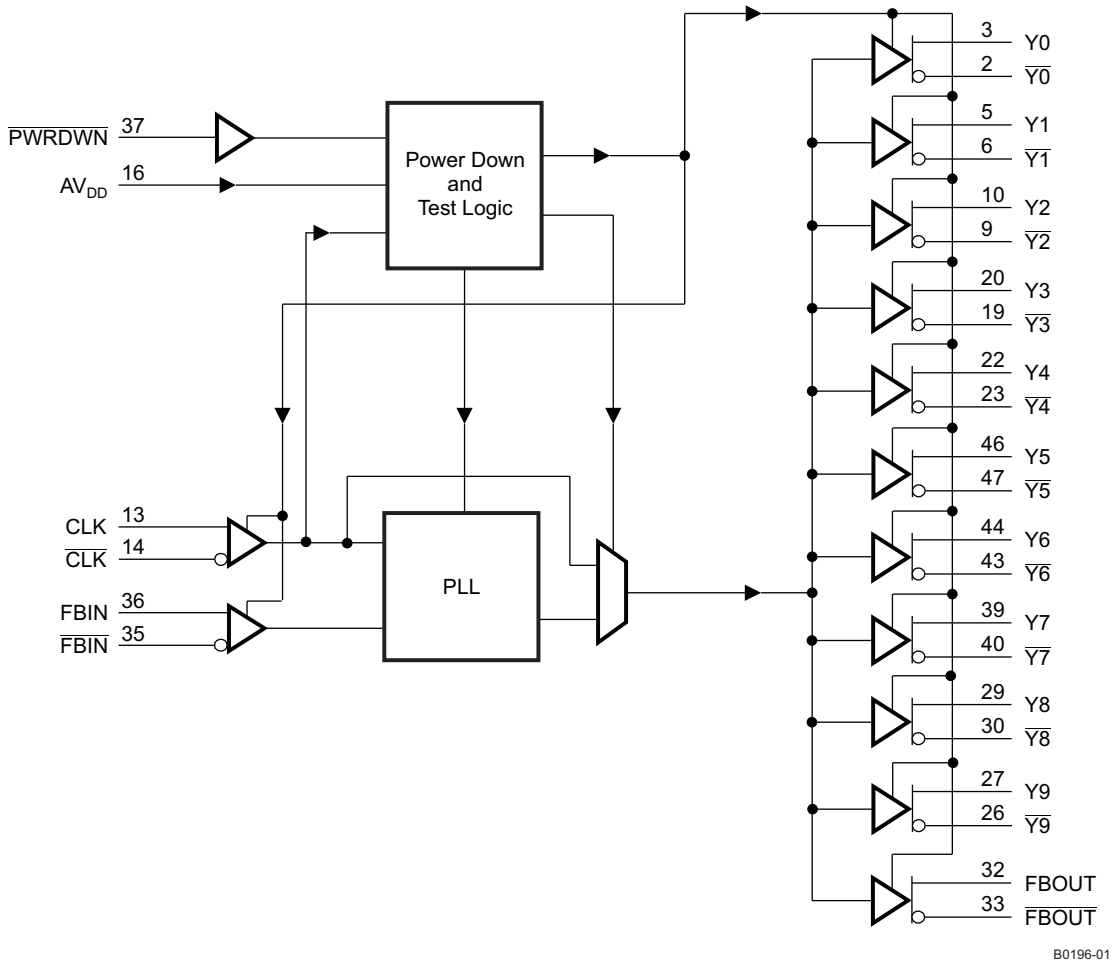

Table 1. TERMINAL FUNCTIONS

TERMINAL				I/O	DESCRIPTION
NAME	DGG	RHA/RTB	GQL/ZQL		
AGND	17	9	H1	–	Ground for 2.5-V analog supply
AV_{DD}	16	8	G2	–	2.5-V analog supply
CLK, $\overline{CLK}$	13, 14	5, 6	F1, F2	I	Differential clock input
$\overline{FBIN}$, FBIN	35, 36	25, 26	F5, F6	I	Feedback differential clock input
FBOUT, $\overline{FBOUT}$	32, 33	21, 22	H6, G5	O	Feedback differential clock output
GND	1, 7, 8, 18, 24, 25, 31, 41, 42, 48	1, 10	A3, A4, C1, C2, C5, C6, H2, H5, K3, K4	–	Ground
$\overline{PWRDWN}$	37	27	E6	I	Output enable for Y and $\overline{Y}$
V_{DDQ}	4, 11, 12, 15, 21, 28, 34, 38, 45	4, 7, 13, 18, 23, 24, 28, 33, 38	B3, B4, E1, E2, E5, G1, G6, J3, J4	–	2.5-V supply
Y0, $\overline{Y0}$	3, 2	37, 36	A1, A2	O	Buffered output copies of input clock, CLK, $\overline{CLK}$
Y1, $\overline{Y1}$	5, 6	39, 40	B2, B1	O	
Y2, $\overline{Y2}$	10, 9	3, 2	D1, D2	O	
Y3, $\overline{Y3}$	20, 19	12,11	J2, J1	O	
Y4, $\overline{Y4}$	22, 23	14, 15	K1, K2	O	
Y5, $\overline{Y5}$	46, 47	34, 35	A6, A5	O	
Y6, $\overline{Y6}$	44, 43	32, 31	B5, B6	O	
Y7, $\overline{Y7}$	39, 40	29, 30	D6, D5	O	
Y8, $\overline{Y8}$	29, 30	19, 20	J5, J6	O	
Y9, $\overline{Y9}$	27, 26	17, 16	K6, K5	O	

ABSOLUTE MAXIMUM RATINGS

over operating free-air temperature range (unless otherwise noted) (1)

V_{DDQ}, AV_{DD}	Supply voltage range		0.5 V to 3.6 V
V_I	Input voltage range (2) (3)		–0.5 V to V_{DDQ} + 0.5 V
V_O	Output voltage range (2) (3)		–0.5 V to V_{DDQ} + 0.5 V
I_{IK}	Input clamp current	$V_I < 0$ or $V_I > V_{DDQ}$	±50 mA
I_{OK}	Output clamp current	$V_O < 0$ or $V_O > V_{DDQ}$	±50 mA
I_O	Continuous output current	$V_O = 0$ to V_{DDQ}	±50 mA
I_{DDC}	Continuous current to GND or V_{DDQ}		±100 mA
T_{stg}	Storage temperature range		–65°C to 150°C

(1) Stresses beyond those listed under "absolute maximum ratings" may cause permanent damage to the device. These are stress ratings only, and functional operation of the device at these or any other conditions beyond those indicated under "recommended operating conditions" is not implied. Exposure to absolute-maximum-rated conditions for extended periods may affect device reliability.
(2) The input and output negative voltage ratings may be exceeded if the input and output clamp current ratings are observed.
(3) This value is limited to 3.6 V maximum.

THERMAL CHARACTERISTICS

$R_{\theta JA}$ for TSSOP (DGG) Package (1)			$R_{\theta JA}$ for MLF (RHA/RTB) Package		$R_{\theta JA}$ for BGA (GQL/ZQL) Package (2)	
Airflow	Low K	High K	Airflow	With 4 Thermal Vias	Airflow	High K
0 ft/min	89.1°C/W	70°C/W	0 ft/min	44.7°C/W	0 ft/min	132.2°C/W
150 ft/min	78.5°C/W	65.3°C/W	150 ft/min		150 ft/min	126.4°C/W

(1) The package thermal impedance is calculated in accordance with JESD 51.
(2) Connecting the NC-balls (C3, C4, D3, D4, G3, G4, H3, H4) to a ground plane improves the θ_{JA} to 114.8°C/W (0 airflow).

RECOMMENDED OPERATING CONDITIONS

				MIN	NOM	MAX	UNIT
	Supply voltage	V_{DDQ}	PC1600 – PC3200	2.3		2.7	V
		AVDD		V_{DDQ} – 0.12		2.7	
V_{IL}	Low-level input voltage	CLK, $\overline{CLK}$, FBIN, $\overline{FBIN}$				V_{DDQ}/2 – 0.18	V
		$\overline{PWRDWN}$		–0.3		0.7	
V_{IH}	High-level input voltage	CLK, $\overline{CLK}$, FBIN, $\overline{FBIN}$		VDDQ/2 + 0.18			V
		$\overline{PWRDWN}$		1.7		V_{DDQ} + 0.3	
	DC input signal voltage (1)			–0.3		V_{DDQ} + 0.3	V
V_{ID}	Differential input signal voltage (2)	DC	CLK, FBIN	0.36		V_{DDQ} + 0.6	V
		AC	CLK, FBIN	0.7		V_{DDQ} + 0.6	
V_{IX}	Input differential pair cross voltage (3)(4)			V_{DDQ}/2 – 0.2		V_{DDQ}/2 + 0.2	V
I_{OH}	High-level output current					–12	mA
I_{OL}	Low-level output current					12	mA
SR	Input slew rate			1		4	V/ns
T_A	Operating free-air temperature			–40		85	°C

(1) The unused inputs must be held high or low to prevent them from floating.
(2) The dc input signal voltage specifies the allowable dc execution of the differential input.
(3) The differential input signal voltage specifies the differential voltage |VTR – VCP| required for switching, where VTR is the true input level and VCP is the complementary input level.
(4) The differential cross-point voltage tracks variations of V_{CC} and is the voltage at which the differential signals must cross.

ELECTRICAL CHARACTERISTICS

over recommended operating free-air temperature range (unless otherwise noted)

PARAMETER		TEST CONDITIONS		MIN	TYP (1)	MAX	UNIT
V_{IK}	Input voltage, all inputs	V_{DDQ} = 2.3 V, I_I = –18 mA				–1.2	V
V_{OH}	High-level output voltage	V_{DDQ} = min to max, I_{OH} = –1 mA		V_{DDQ} – 0.1			V
		V_{DDQ} = 2.3 V, I_{OH} = –12 mA		1.7			
V_{OL}	Low-level output voltage	V_{DDQ} = min to max, I_{OL} = 1 mA				0.1	V
		V_{DDQ} = 2.3 V, I_{OL} = 12 mA				0.6	
V_{OD}	Output voltage swing (2)	Differential outputs are terminated with 120 Ω, C_L = 14 pF (see Figure 3)		1.1		V_{DDQ} – 0.4	V
V_{OX}	Output differential cross-voltage (3)			V_{DDQ}/2 – 0.1	V_{DDQ}/2	V_{DDQ}/2 + 0.1	V
I_I	Input current	V_{DDQ} = 2.7 V, V_I = 0 V to 2.7 V				±10	µA
I_{OZ}	High-impedance-state output current	V_{DDQ} = 2.7 V, V_O = V_{DDQ} or GND				±10	µA
I_{DDPD}	Power-down current on V_{DDQ} + AV_{DD}	CLK and $\overline{CLK}$ = 0 MHz; $\overline{PWRDWN}$ = Low; Σ of I_{DD} and AI_{DD}			20	100	µA
AI_{DD}	Supply current on AV_{DD}	f_O = 170 MHz			6	8	mA
		f_O = 200 MHz			8	10	
C_I	Input capacitance	V_{DDQ} = 2.5 V, V_I = V_{DDQ} or GND		2	2.5	3.5	pF
I_{DD}	Dynamic current on V_{DDQ}	Without load	f_O = 170 MHz		120	140	mA
			f_O = 200 MHz		125	150	
		Differential outputs terminated with 120 Ω, C_L = 0 pF	f_O = 170 MHz		220	270	
			f_O = 200 MHz		230	280	
		Differential outputs terminated with 120 Ω, C_L = 14 pF	f_O = 170 MHz		280	330	
			f_O = 200 MHz		300	350	

(1) All typical values are at nominal V_{DDQ}.
(2) The differential output signal voltage specifies the differential voltage |VTR – VCP|, where VTR is the true output level and VCP is the complementary output level.
(3) The differential cross-point voltage tracks variations of V_{DDQ} and is the voltage at which the differential signals must cross.

ELECTRICAL CHARACTERISTICS (continued)

over recommended operating free-air temperature range (unless otherwise noted)

PARAMETER		TEST CONDITIONS	MIN	TYP (1)	MAX	UNIT
ΔC	Part-to-part input capacitance variation	V_{DDQ} = 2.5 V, V_I = V_{DDQ} or GND			1	pF
$C_{I(\Delta)}$	Input capacitance difference between CLK and $\overline{CLK}$, FBIN, and $\overline{FBIN}$	V_{DDQ} = 2.5 V, V_I = V_{DDQ} or GND			0.25	pF

TIMING REQUIREMENTS

over recommended ranges of supply voltage and operating free-air temperature

PARAMETER		MIN	MAX	UNIT
f_{CLK}	Operating clock frequency	60	220	MHz
	Application clock frequency	90	220	
	Input clock duty cycle	40%	60%	
	Stabilization time (PLL mode) (1)		10	µs
	Stabilization time (bypass mode) (2)		30	ns

(1) The time required for the integrated PLL circuit to obtain phase lock of its feedback signal to its reference signal. For phase lock to be obtained, a fixed-frequency, fixed-phase reference signal must be present at CLK and V_{DD} must be applied. Until phase lock is obtained, the specifications for propagation delay, skew, and jitter parameters given in the switching characteristics table are not applicable. This parameter does not apply for input modulation under SSC application.
(2) A recovery time is required when the device goes from power-down mode into bypass mode (AV_{DD} at GND).

SWITCHING CHARACTERISTICS

over operating free-air temperature range (unless otherwise noted)

PARAMETER		TEST CONDITIONS	MIN	TYP	MAX	UNIT
t_{PLH} (1)	Low-to-high level propagation delay time	Test mode/CLK to any output		3.5		ns
t_{PHL} (1)	High-to-low level propagation delay time	Test mode/CLK to any output		3.5		ns
$t_{jit(per)}$ (2)	Jitter (period), see Figure 7	100 MHz (PC1600)	–65		65	ps
		133/167/200 MHz (PC2100/2700/3200)	–30		30	
$t_{jit(cc)}$ (2)	Jitter (cycle-to-cycle), see Figure 4	100 MHz (PC1600)	–50		50	ps
		133/167/200 MHz (PC2100/2700/3200)	–35		35	
$t_{jit(hper)}$ (2)	Half-period jitter, see Figure 8	100 MHz (PC1600)	–100		100	ps
		133/167/200 MHz (PC2100/2700/3200)	–75		75	
$t_{slr(o)}$	Output clock slew rate, see Figure 9	Load: 120 Ω, 14 pF	1		2	V/ns
$t_{(\phi)}$	Static phase offset, see Figure 5	100/133/167/200 MHz	–50		50	ps
$t_{sk(o)}$	Output skew, see Figure 6	Load: 120 Ω, 14 pF; 100/133/167/200 MHz			40	ps

(1) Refers to the transition of the noninverting output.
(2) This parameter is assured by design but cannot be 100% production tested.

PARAMETER MEASUREMENT INFORMATION

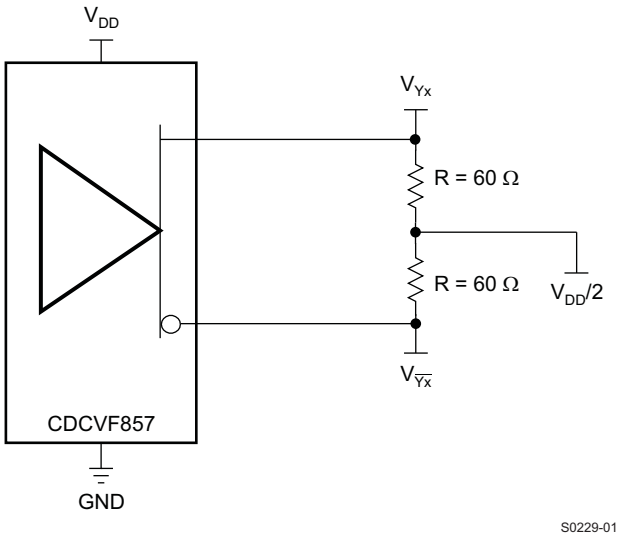

Figure 1. IBIS Model Output Load

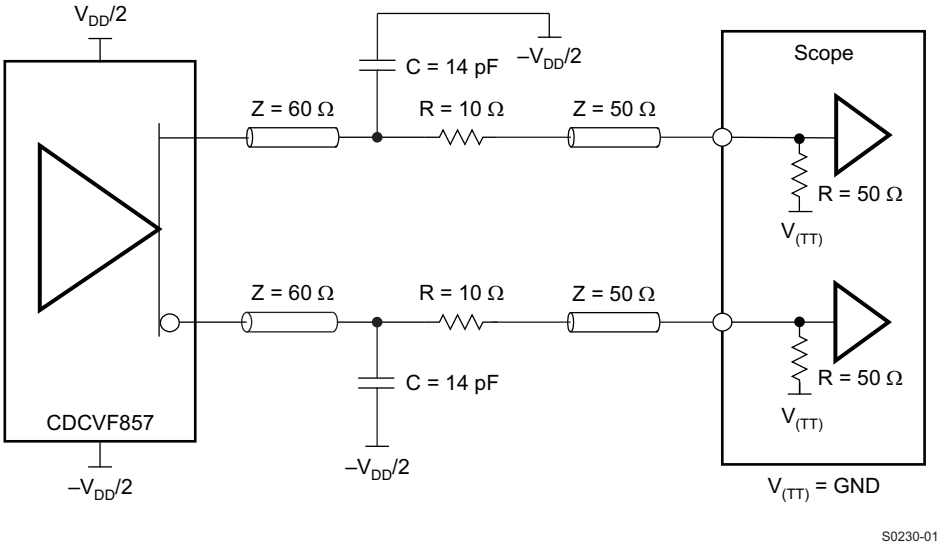

Figure 2. Output Load Test Circuit

PARAMETER MEASUREMENT INFORMATION (continued)

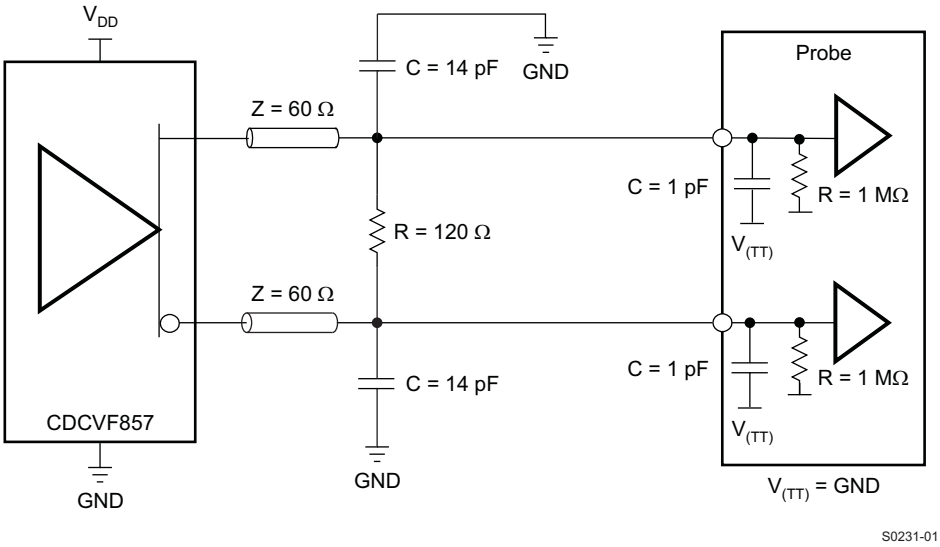

Figure 3. Output Load Test Circuit for Crossing Point

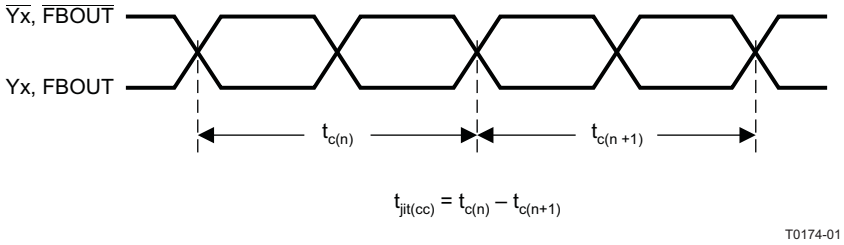

Figure 4. Cycle-to-Cycle Jitter

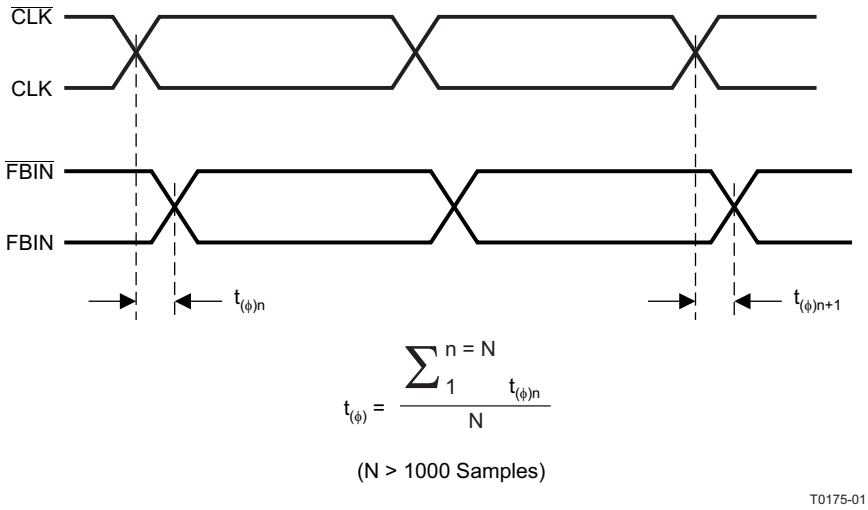

Figure 5. Phase Offset

PARAMETER MEASUREMENT INFORMATION (continued)

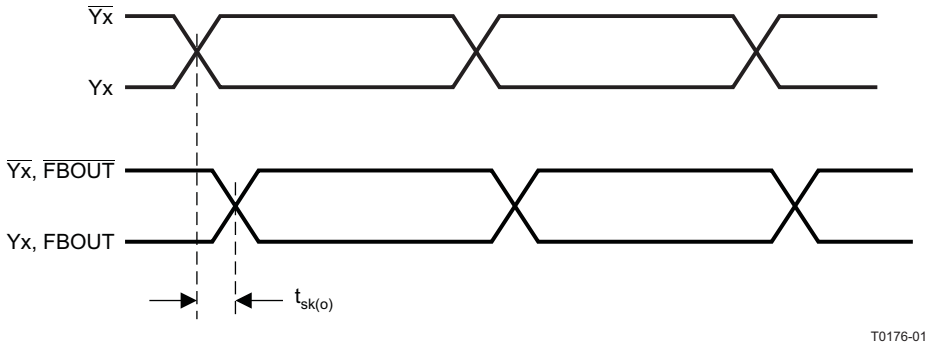

Figure 6. Output Skew

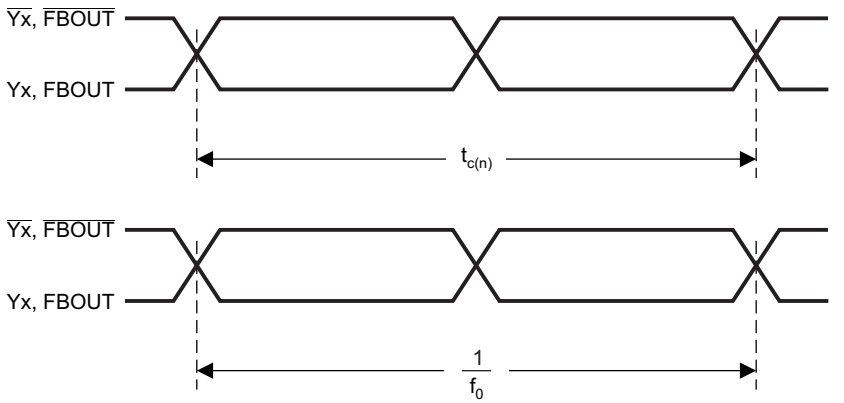

$t_{jit(per)} = t_{c(n)} - \frac{1}{f_0}$ f_0 = Average Input Frequency Measured at CLK/$\overline{CLK}$

T0177-01

Figure 7. Period Jitter

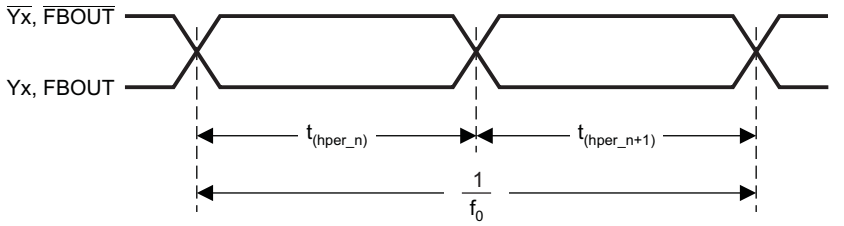

n = Any Half Cycle

$t_{jit(hper)} = t_{(hper_n)} - \frac{1}{2 \times f_0}$ f_0 = Average Input Frequency Measured at CLK/$\overline{CLK}$

T0178-01

Figure 8. Half-Period Jitter

PARAMETER MEASUREMENT INFORMATION (continued)

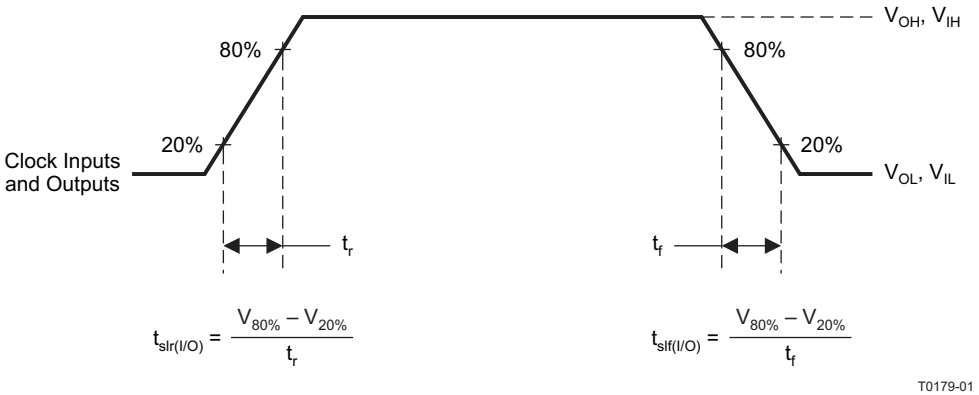

Figure 9. Input and Output Slew Rates

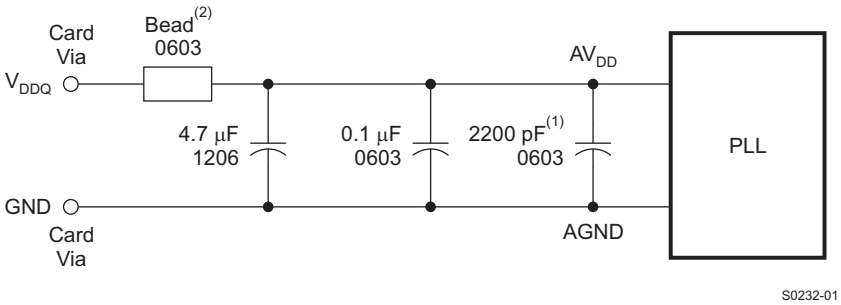

(1) Place the 2200-pF capacitor close to the PLL.

(2) Recommended bead: Fair-Rite P/N 2506036017Y0 or equivalent (0.8 Ω dc maximum, 600 Ω at 100 MHz).

NOTE: Use a wide trace for the PLL analog power and ground. Connect PLL and capacitors to AGND trace and connect trace to one GND via (farthest from the PLL).

Figure 10. Recommended AV_{DD} Filtering

PACKAGING INFORMATION

Orderable Device	Status (1)	Package Type	Package Drawing	Pins	Package Qty	Eco Plan (2)	Lead/Ball Finish (6)	MSL Peak Temp (3)	Op Temp (°C)	Device Marking (4/5)	Samples
CDCVF857DGG	ACTIVE	TSSOP	DGG	48	40	Green (RoHS & no Sb/Br)	CU NIPDAU	Level-2-260C-1 YEAR	-40 to 85	CDCVF857	Samples
CDCVF857DGGG4	ACTIVE	TSSOP	DGG	48	40	Green (RoHS & no Sb/Br)	CU NIPDAU	Level-2-260C-1 YEAR	-40 to 85	CDCVF857	Samples
CDCVF857DGGR	ACTIVE	TSSOP	DGG	48	2000	Green (RoHS & no Sb/Br)	CU NIPDAU	Level-2-260C-1 YEAR	-40 to 85	CDCVF857	Samples
CDCVF857DGGRG4	ACTIVE	TSSOP	DGG	48	2000	Green (RoHS & no Sb/Br)	CU NIPDAU	Level-2-260C-1 YEAR	-40 to 85	CDCVF857	Samples
CDCVF857GQLR	ACTIVE	BGA MICROSTAR JUNIOR	GQL	56	1000	TBD	SNPB	Level-2A-220C-4 WKS	-40 to 85	CDCVF857	Samples
CDCVF857RHAR	ACTIVE	VQFN	RHA	40	2500	Green (RoHS & no Sb/Br)	CU NIPDAU	Level-3-260C-168 HR	-40 to 85	CKVF857	Samples
CDCVF857RHARG4	ACTIVE	VQFN	RHA	40	2500	Green (RoHS & no Sb/Br)	CU NIPDAU	Level-3-260C-168 HR	-40 to 85	CKVF857	Samples
CDCVF857RHAT	ACTIVE	VQFN	RHA	40	250	Green (RoHS & no Sb/Br)	CU NIPDAU	Level-3-260C-168 HR	-40 to 85	CKVF857	Samples
CDCVF857RHATG4	ACTIVE	VQFN	RHA	40	250	Green (RoHS & no Sb/Br)	CU NIPDAU	Level-3-260C-168 HR	-40 to 85	CKVF857	Samples
CDCVF857RTBR	OBSOLETE	VQFN	RTB	40		TBD	Call TI	Call TI	-40 to 85	CKVF857	
CDCVF857RTBT	OBSOLETE	VQFN	RTB	40		TBD	Call TI	Call TI	-40 to 85	CKVF857	
CDCVF857ZQLR	ACTIVE	BGA MICROSTAR JUNIOR	ZQL	56	1000	Green (RoHS & no Sb/Br)	SNAGCU	Level-1-260C-UNLIM	-40 to 85	CDCVF857	Samples

(1) The marketing status values are defined as follows:
ACTIVE: Product device recommended for new designs.
LIFEBUY: TI has announced that the device will be discontinued, and a lifetime-buy period is in effect.
NRND: Not recommended for new designs. Device is in production to support existing customers, but TI does not recommend using this part in a new design.
PREVIEW: Device has been announced but is not in production. Samples may or may not be available.
OBSOLETE: TI has discontinued the production of the device.

(2) Eco Plan - The planned eco-friendly classification: Pb-Free (RoHS), Pb-Free (RoHS Exempt), or Green (RoHS & no Sb/Br) - please check http://www.ti.com/productcontent for the latest availability information and additional product content details.
TBD: The Pb-Free/Green conversion plan has not been defined.

Pb-Free (RoHS): TI's terms "Lead-Free" or "Pb-Free" mean semiconductor products that are compatible with the current RoHS requirements for all 6 substances, including the requirement that lead not exceed 0.1% by weight in homogeneous materials. Where designed to be soldered at high temperatures, TI Pb-Free products are suitable for use in specified lead-free processes.
Pb-Free (RoHS Exempt): This component has a RoHS exemption for either 1) lead-based flip-chip solder bumps used between the die and package, or 2) lead-based die adhesive used between the die and leadframe. The component is otherwise considered Pb-Free (RoHS compatible) as defined above.
Green (RoHS & no Sb/Br): TI defines "Green" to mean Pb-Free (RoHS compatible), and free of Bromine (Br) and Antimony (Sb) based flame retardants (Br or Sb do not exceed 0.1% by weight in homogeneous material)

(3) MSL, Peak Temp. - The Moisture Sensitivity Level rating according to the JEDEC industry standard classifications, and peak solder temperature.

(4) There may be additional marking, which relates to the logo, the lot trace code information, or the environmental category on the device.

(5) Multiple Device Markings will be inside parentheses. Only one Device Marking contained in parentheses and separated by a "~" will appear on a device. If a line is indented then it is a continuation of the previous line and the two combined represent the entire Device Marking for that device.

(6) Lead/Ball Finish - Orderable Devices may have multiple material finish options. Finish options are separated by a vertical ruled line. Lead/Ball Finish values may wrap to two lines if the finish value exceeds the maximum column width.

Important Information and Disclaimer: The information provided on this page represents TI's knowledge and belief as of the date that it is provided. TI bases its knowledge and belief on information provided by third parties, and makes no representation or warranty as to the accuracy of such information. Efforts are underway to better integrate information from third parties. TI has taken and continues to take reasonable steps to provide representative and accurate information but may not have conducted destructive testing or chemical analysis on incoming materials and chemicals. TI and TI suppliers consider certain information to be proprietary, and thus CAS numbers and other limited information may not be available for release.

In no event shall TI's liability arising out of such information exceed the total purchase price of the TI part(s) at issue in this document sold by TI to Customer on an annual basis.

TAPE AND REEL INFORMATION

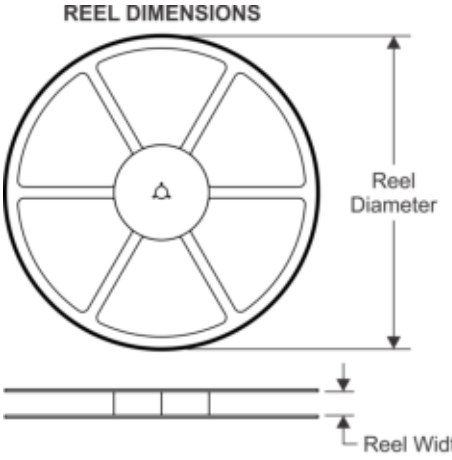

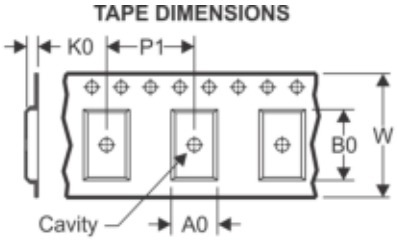

A0	Dimension designed to accommodate the component width
B0	Dimension designed to accommodate the component length
K0	Dimension designed to accommodate the component thickness
W	Overall width of the carrier tape
P1	Pitch between successive cavity centers

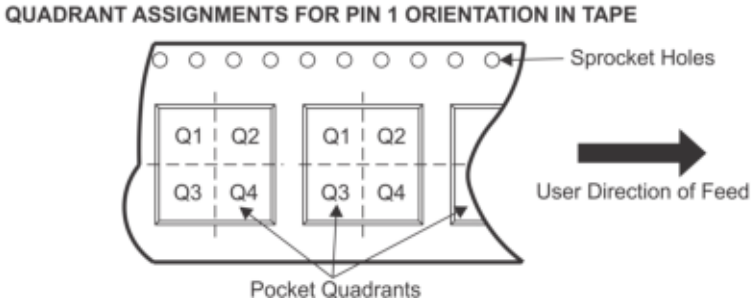

*All dimensions are nominal

Device	Package Type	Package Drawing	Pins	SPQ	Reel Diameter (mm)	Reel Width W1 (mm)	A0 (mm)	B0 (mm)	K0 (mm)	P1 (mm)	W (mm)	Pin1 Quadrant
CDCVF857DGGR	TSSOP	DGG	48	2000	330.0	24.4	8.6	15.8	1.8	12.0	24.0	Q1
CDCVF857RHAR	VQFN	RHA	40	2500	330.0	16.4	6.3	6.3	1.1	12.0	16.0	Q2
CDCVF857RHAT	VQFN	RHA	40	250	180.0	16.4	6.3	6.3	1.1	12.0	16.0	Q2
CDCVF857ZQLR	BGA MICROSTAR JUNIOR	ZQL	56	1000	330.0	16.4	4.8	7.3	1.5	8.0	16.0	Q1

TAPE AND REEL BOX DIMENSIONS

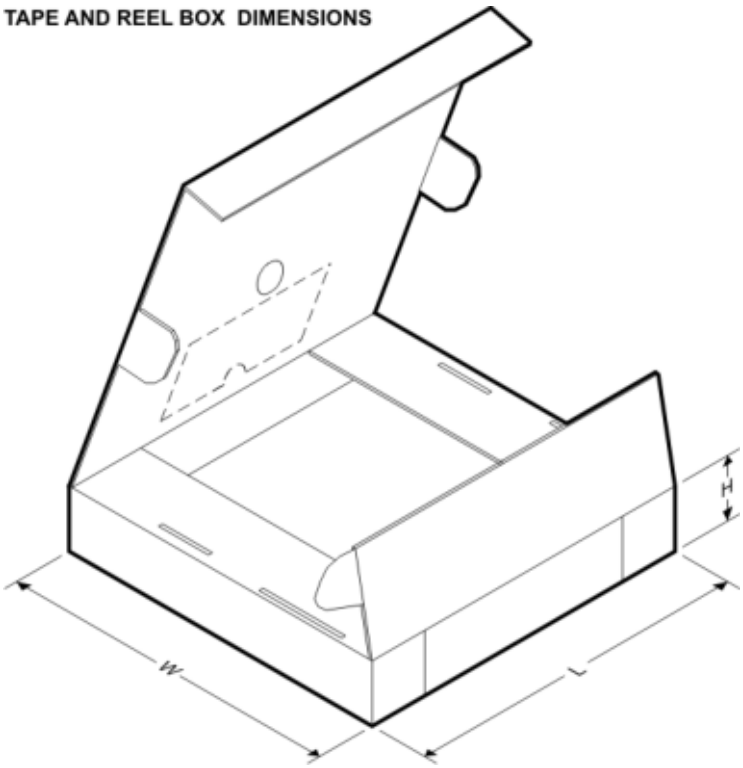

*All dimensions are nominal

Device	Package Type	Package Drawing	Pins	SPQ	Length (mm)	Width (mm)	Height (mm)
CDCVF857DGGR	TSSOP	DGG	48	2000	367.0	367.0	45.0
CDCVF857RHAR	VQFN	RHA	40	2500	367.0	367.0	38.0
CDCVF857RHAT	VQFN	RHA	40	250	210.0	185.0	35.0
CDCVF857ZQLR	BGA MICROSTAR JUNIOR	ZQL	56	1000	336.6	336.6	28.6

ZQL (R–PBGA–N56) PLASTIC BALL GRID ARRAY

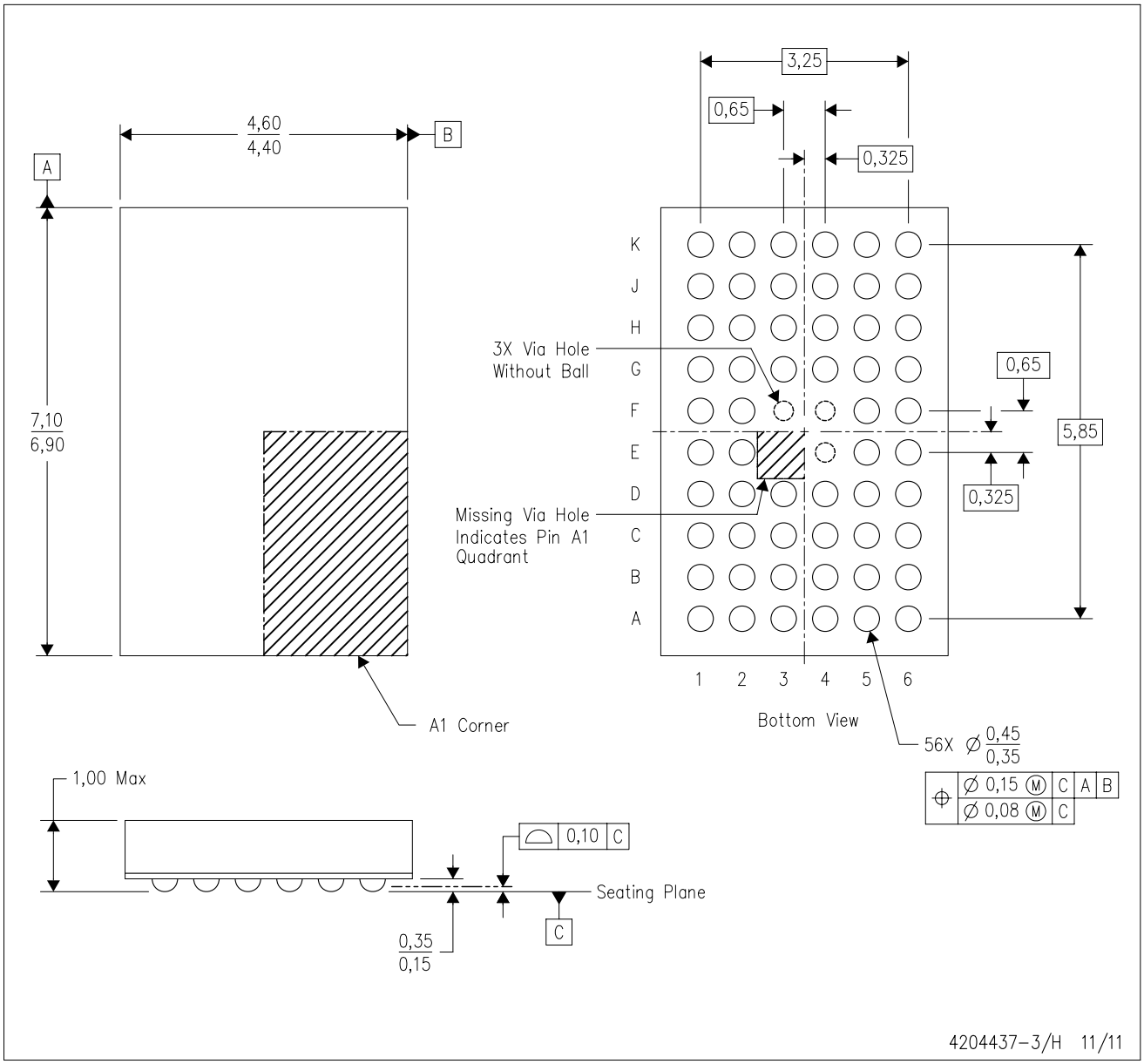

NOTES:
A. All linear dimensions are in millimeters. Dimensioning and tolerancing per ASME Y14.5M–1994.
B. This drawing is subject to change without notice.
C. Falls within JEDEC MO–285 variation BA–2.
D. This package is Pb–free. Refer to the 56 GQL package (drawing 4200583) for tin–lead (SnPb).

MicroStar Junior is a trademark of Texas Instruments

GQL (R–PBGA–N56) PLASTIC BALL GRID ARRAY

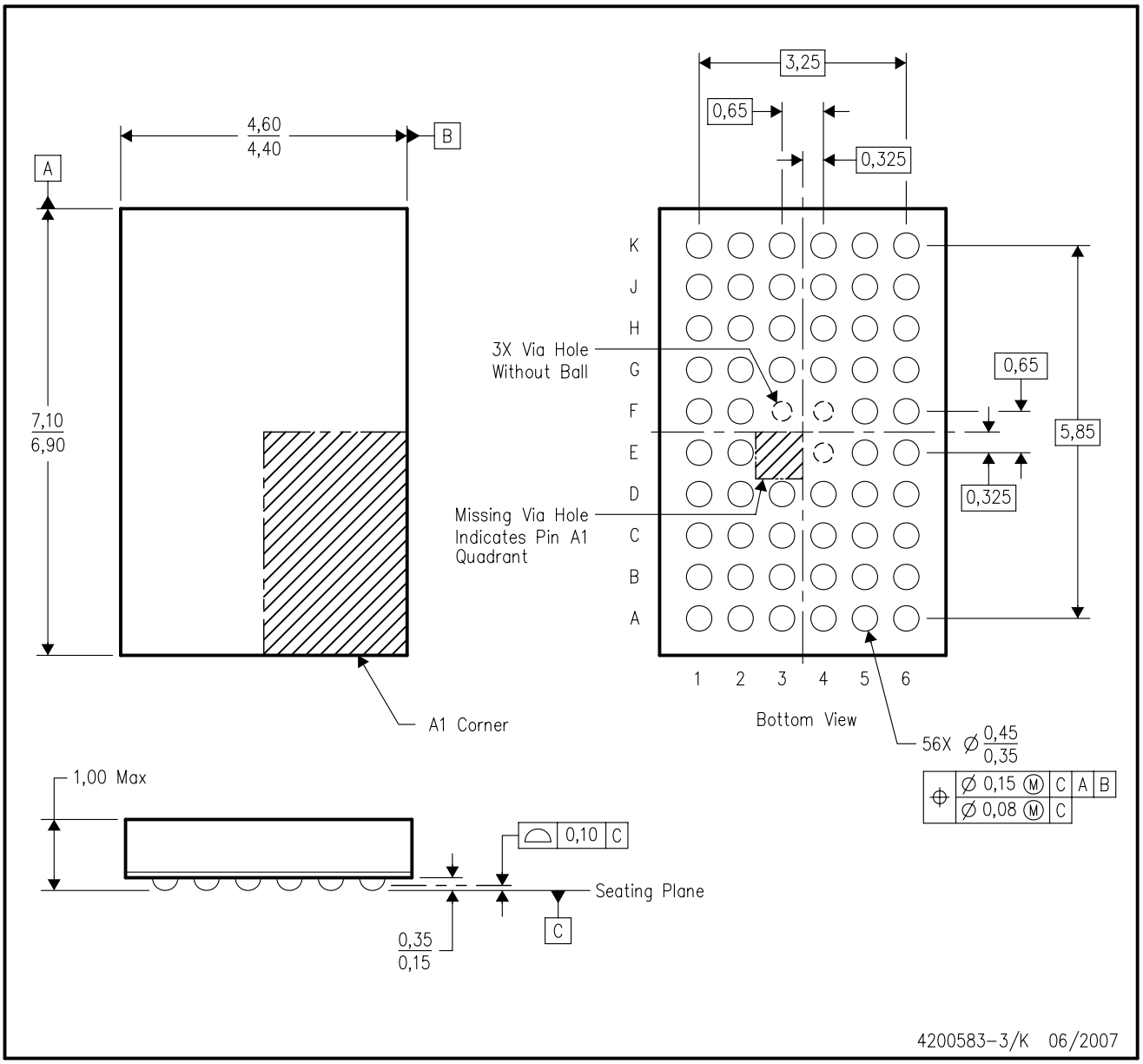

NOTES:
A. All linear dimensions are in millimeters. Dimensioning and tolerancing per ASME Y14.5M–1994.
B. This drawing is subject to change without notice.
C. Falls within JEDEC MO–285 variation BA–2.
D. This package is tin–lead (SnPb). Refer to the 56 ZQL package (drawing 4204437) for lead–free.

RHA (S–PVQFN–N40) PLASTIC QUAD FLATPACK NO–LEAD

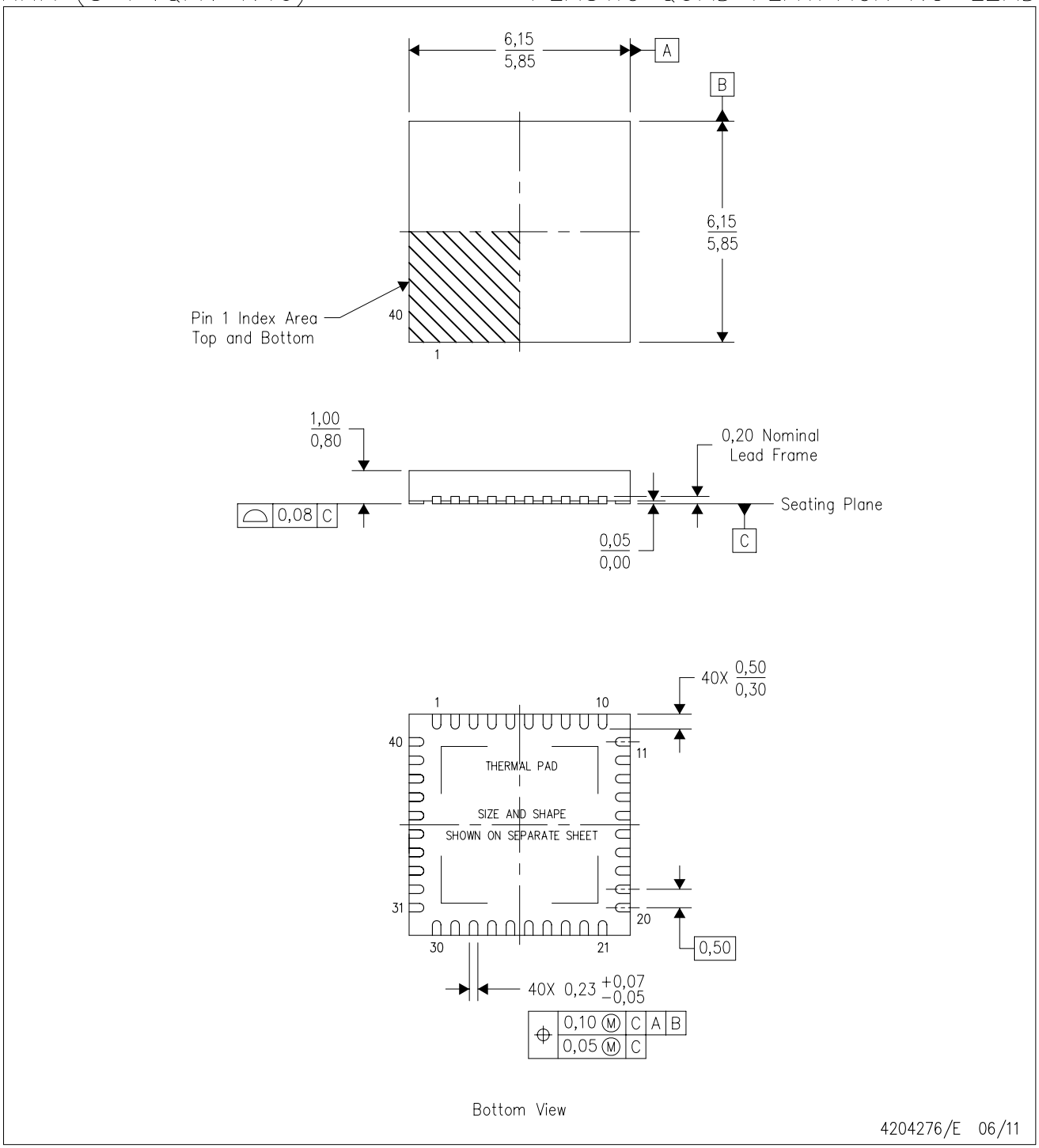

NOTES:
A. All linear dimensions are in millimeters. Dimensioning and tolerancing per ASME Y14.5M–1994.
B. This drawing is subject to change without notice.
C. QFN (Quad Flatpack No–Lead) Package configuration.
D. The package thermal pad must be soldered to the board for thermal and mechanical performance.
E. See the additional figure in the Product Data Sheet for details regarding the exposed thermal pad features and dimensions.
F. Package complies to JEDEC MO–220 variation VJJD–2.

RHA (S–PVQFN–N40) PLASTIC QUAD FLATPACK NO–LEAD

THERMAL INFORMATION

This package incorporates an exposed thermal pad that is designed to be attached directly to an external heatsink. The thermal pad must be soldered directly to the printed circuit board (PCB). After soldering, the PCB can be used as a heatsink. In addition, through the use of thermal vias, the thermal pad can be attached directly to the appropriate copper plane shown in the electrical schematic for the device, or alternatively, can be attached to a special heatsink structure designed into the PCB. This design optimizes the heat transfer from the integrated circuit (IC).

For information on the Quad Flatpack No–Lead (QFN) package and its advantages, refer to Application Report, QFN/SON PCB Attachment, Texas Instruments Literature No. SLUA271. This document is available at www.ti.com.

The exposed thermal pad dimensions for this package are shown in the following illustration.

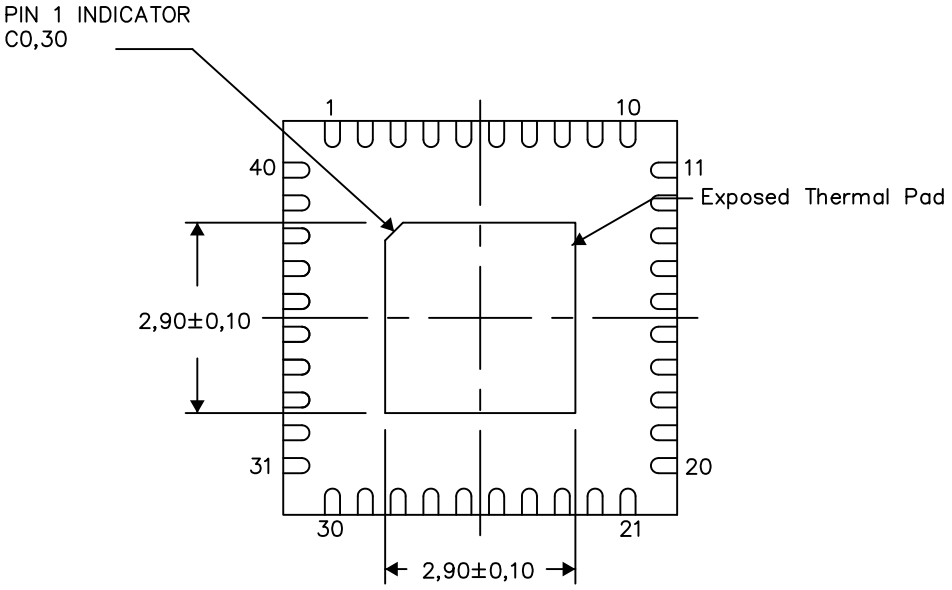

Bottom View

Exposed Thermal Pad Dimensions

4206355–3/X 08/14

NOTES: A. All linear dimensions are in millimeters

RHA (S–PVQFN–N40) PLASTIC QUAD FLATPACK NO–LEAD

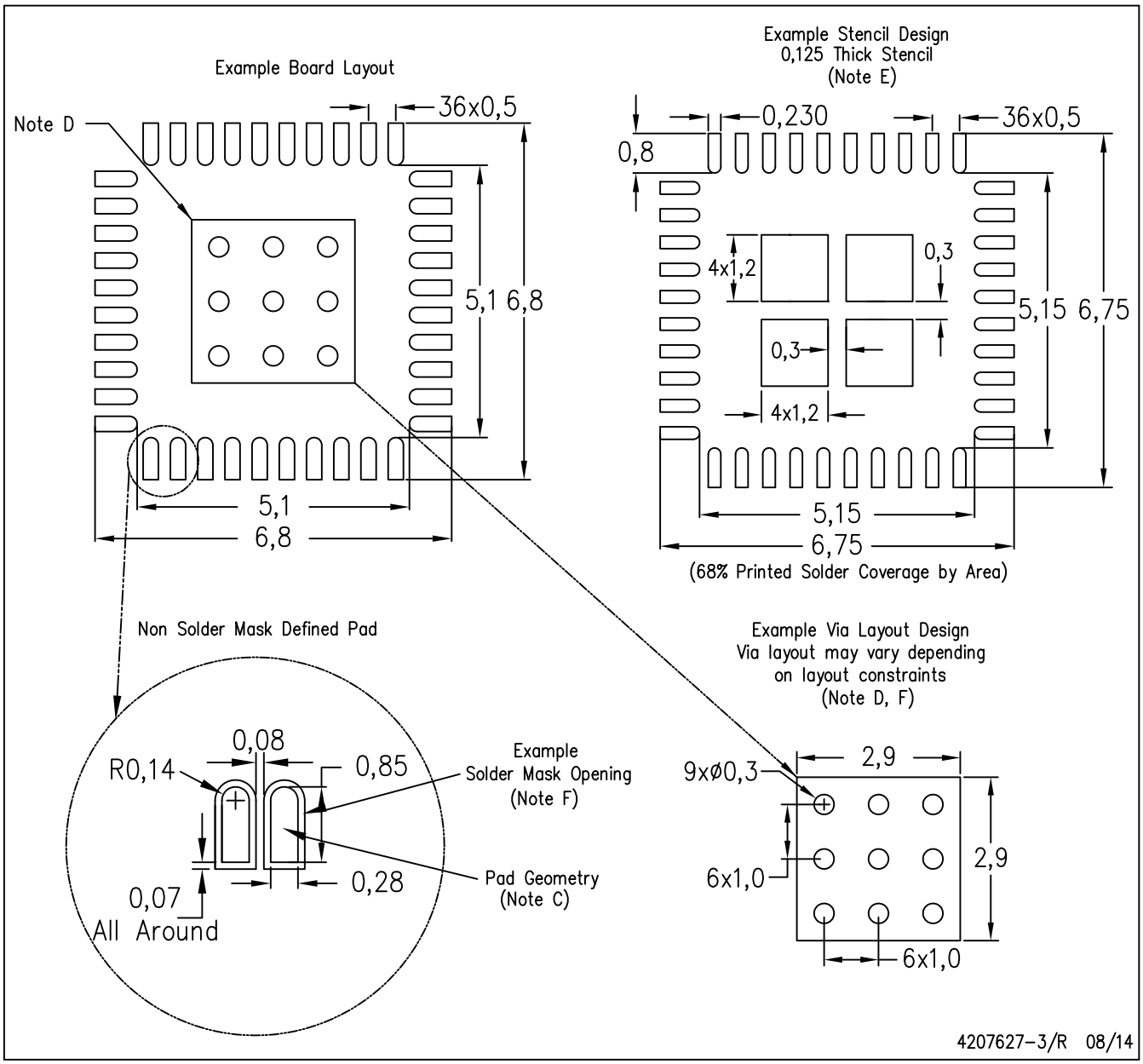

NOTES:
- A. All linear dimensions are in millimeters.
- B. This drawing is subject to change without notice.
- C. Publication IPC–7351 is recommended for alternate designs.
- D. This package is designed to be soldered to a thermal pad on the board. Refer to Application Note, Quad Flat–Pack Packages, Texas Instruments Literature No. SLUA271, and also the Product Data Sheets for specific thermal information, via requirements, and recommended board layout. These documents are available at www.ti.com <http://www.ti.com>.
- E. Laser cutting apertures with trapezoidal walls and also rounding corners will offer better paste release. Customers should contact their board assembly site for stencil design recommendations. Refer to IPC 7525 for stencil design considerations.
- F. Customers should contact their board fabrication site for recommended solder mask tolerances and via tenting recommendations for vias placed in the thermal pad.

RTB (S–PQFP–N40) PLASTIC QUAD FLATPACK

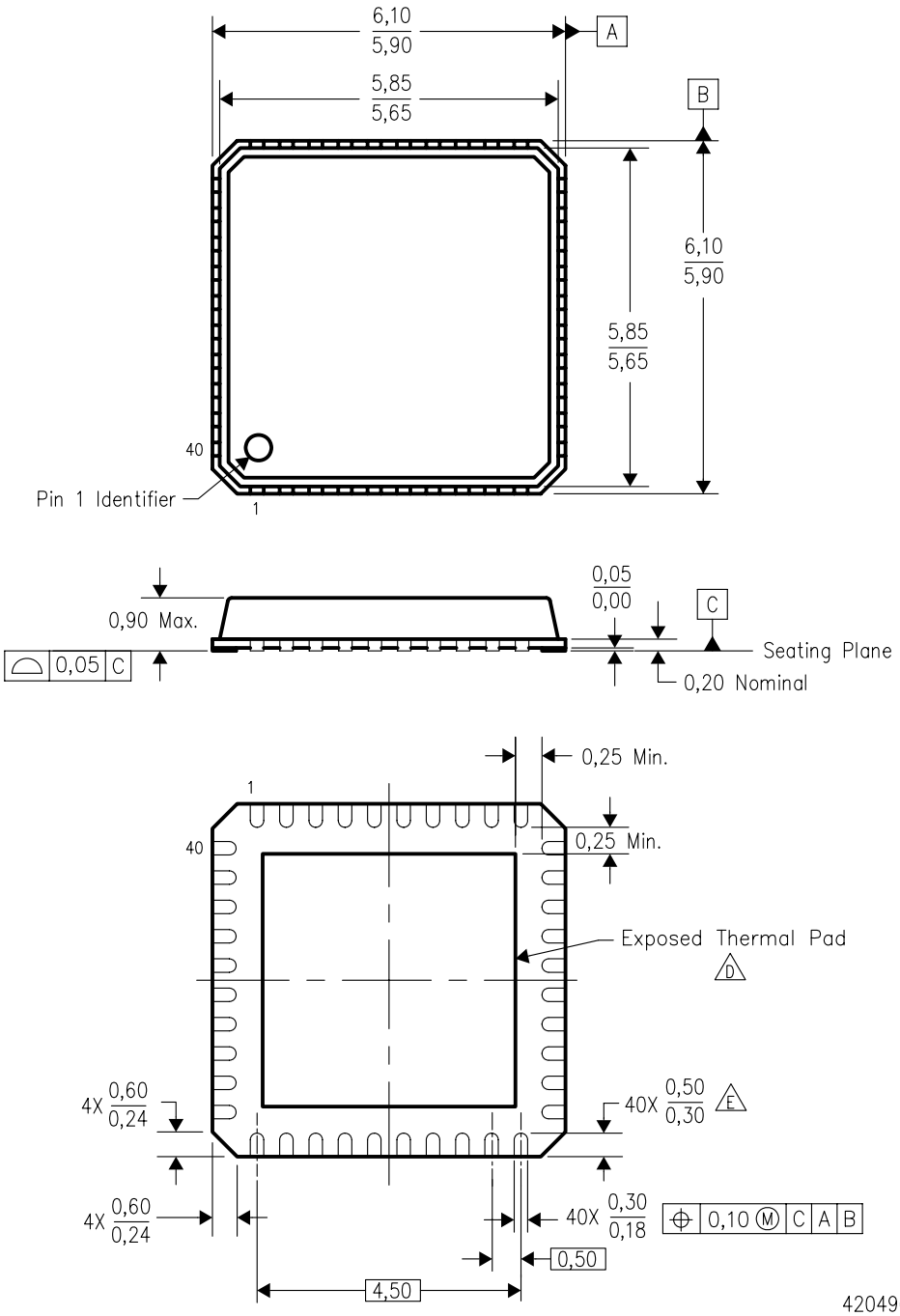

NOTES: A. All linear dimensions are in millimeters. Dimensioning and tolerancing per ASME Y14.5M–1994.
B. This drawing is subject to change without notice.
C. QFN (Quad Flatpack No–Lead) Package configuration.

D. The package thermal pad must be soldered to the board for thermal and mechanical performance. See the Product Data Sheet for details regarding the exposed thermal pad dimensions.

E. Some products have selected lands extended past 0,50 length. See Product Data Sheet for details regarding specific land length exceptions.

DGG (R-PDSO-G)** **PLASTIC SMALL-OUTLINE PACKAGE**

48 PINS SHOWN

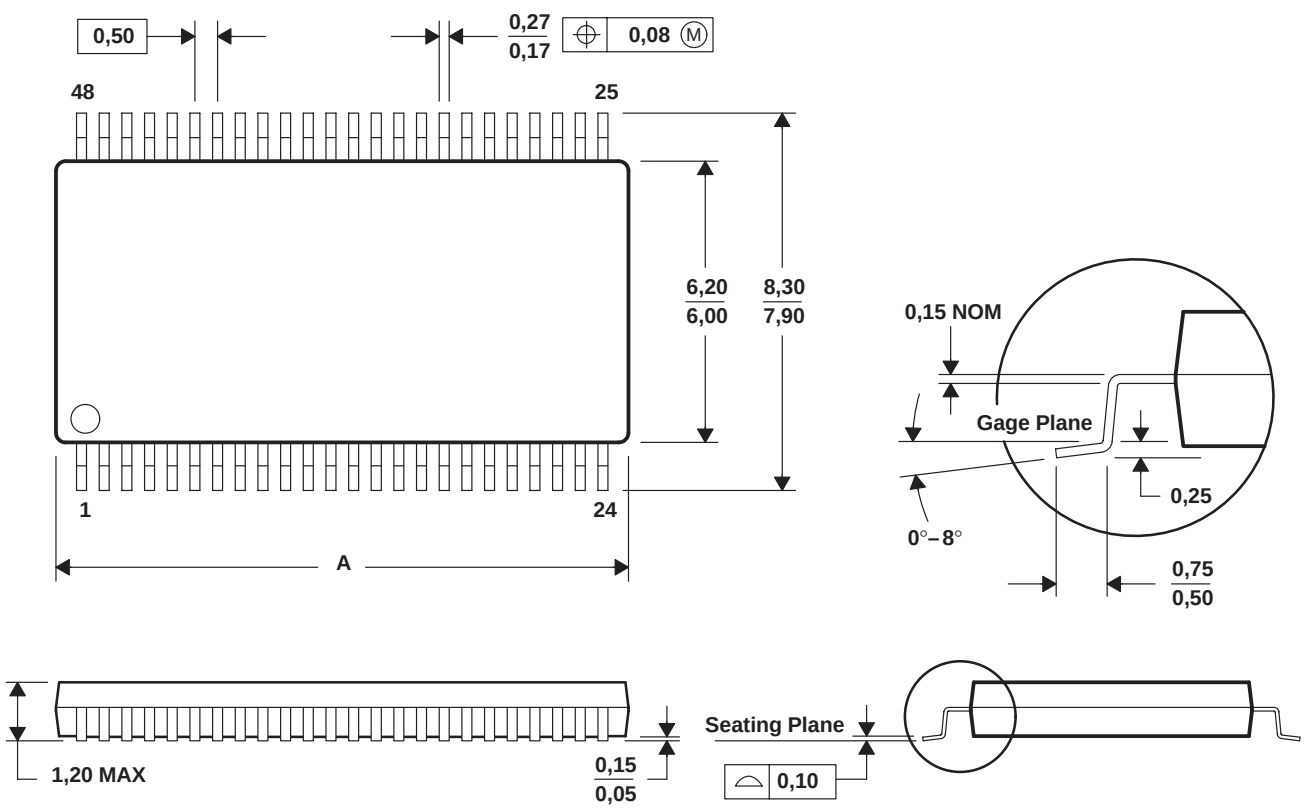

DIM \ PINS **	48	56	64
A MAX	12,60	14,10	17,10
A MIN	12,40	13,90	16,90

4040078/F 12/97

NOTES: A. All linear dimensions are in millimeters.
B. This drawing is subject to change without notice.
C. Body dimensions do not include mold protrusion not to exceed 0,15.
D. Falls within JEDEC MO-153

IMPORTANT NOTICE

Texas Instruments Incorporated and its subsidiaries (TI) reserve the right to make corrections, enhancements, improvements and other changes to its semiconductor products and services per JESD46, latest issue, and to discontinue any product or service per JESD48, latest issue. Buyers should obtain the latest relevant information before placing orders and should verify that such information is current and complete. All semiconductor products (also referred to herein as "components") are sold subject to TI's terms and conditions of sale supplied at the time of order acknowledgment.

TI warrants performance of its components to the specifications applicable at the time of sale, in accordance with the warranty in TI's terms and conditions of sale of semiconductor products. Testing and other quality control techniques are used to the extent TI deems necessary to support this warranty. Except where mandated by applicable law, testing of all parameters of each component is not necessarily performed.

TI assumes no liability for applications assistance or the design of Buyers' products. Buyers are responsible for their products and applications using TI components. To minimize the risks associated with Buyers' products and applications, Buyers should provide adequate design and operating safeguards.

TI does not warrant or represent that any license, either express or implied, is granted under any patent right, copyright, mask work right, or other intellectual property right relating to any combination, machine, or process in which TI components or services are used. Information published by TI regarding third-party products or services does not constitute a license to use such products or services or a warranty or endorsement thereof. Use of such information may require a license from a third party under the patents or other intellectual property of the third party, or a license from TI under the patents or other intellectual property of TI.

Reproduction of significant portions of TI information in TI data books or data sheets is permissible only if reproduction is without alteration and is accompanied by all associated warranties, conditions, limitations, and notices. TI is not responsible or liable for such altered documentation. Information of third parties may be subject to additional restrictions.

Resale of TI components or services with statements different from or beyond the parameters stated by TI for that component or service voids all express and any implied warranties for the associated TI component or service and is an unfair and deceptive business practice. TI is not responsible or liable for any such statements.

Buyer acknowledges and agrees that it is solely responsible for compliance with all legal, regulatory and safety-related requirements concerning its products, and any use of TI components in its applications, notwithstanding any applications-related information or support that may be provided by TI. Buyer represents and agrees that it has all the necessary expertise to create and implement safeguards which anticipate dangerous consequences of failures, monitor failures and their consequences, lessen the likelihood of failures that might cause harm and take appropriate remedial actions. Buyer will fully indemnify TI and its representatives against any damages arising out of the use of any TI components in safety-critical applications.

In some cases, TI components may be promoted specifically to facilitate safety-related applications. With such components, TI's goal is to help enable customers to design and create their own end-product solutions that meet applicable functional safety standards and requirements. Nonetheless, such components are subject to these terms.

No TI components are authorized for use in FDA Class III (or similar life-critical medical equipment) unless authorized officers of the parties have executed a special agreement specifically governing such use.

Only those TI components which TI has specifically designated as military grade or "enhanced plastic" are designed and intended for use in military/aerospace applications or environments. Buyer acknowledges and agrees that any military or aerospace use of TI components which have ***not*** been so designated is solely at the Buyer's risk, and that Buyer is solely responsible for compliance with all legal and regulatory requirements in connection with such use.

TI has specifically designated certain components as meeting ISO/TS16949 requirements, mainly for automotive use. In any case of use of non-designated products, TI will not be responsible for any failure to meet ISO/TS16949.

Products		**Applications**	
Audio	www.ti.com/audio	Automotive and Transportation	www.ti.com/automotive
Amplifiers	amplifier.ti.com	Communications and Telecom	www.ti.com/communications
Data Converters	dataconverter.ti.com	Computers and Peripherals	www.ti.com/computers
DLP® Products	www.dlp.com	Consumer Electronics	www.ti.com/consumer-apps
DSP	dsp.ti.com	Energy and Lighting	www.ti.com/energy
Clocks and Timers	www.ti.com/clocks	Industrial	www.ti.com/industrial
Interface	interface.ti.com	Medical	www.ti.com/medical
Logic	logic.ti.com	Security	www.ti.com/security
Power Mgmt	power.ti.com	Space, Avionics and Defense	www.ti.com/space-avionics-defense
Microcontrollers	microcontroller.ti.com	Video and Imaging	www.ti.com/video
RFID	www.ti-rfid.com		
OMAP Applications Processors	www.ti.com/omap	**TI E2E Community**	e2e.ti.com
Wireless Connectivity	www.ti.com/wirelessconnectivity		

Mailing Address: Texas Instruments, Post Office Box 655303, Dallas, Texas 75265
Copyright © 2014, Texas Instruments Incorporated