| REV. | DESCRIPTION | DATE | APPROVED |
|---|---|---|---|
| B | Engineering Update w/o Changes | 02/24/04 | M. C. |
| C | Removed Part From Part Offering List | 09/29/15 | J. C. |
| D | Added Notes 3, 4, 5 & Color Options Sheet #2 | 05/16/16 | J. C. |
| | | | |
| | | | |

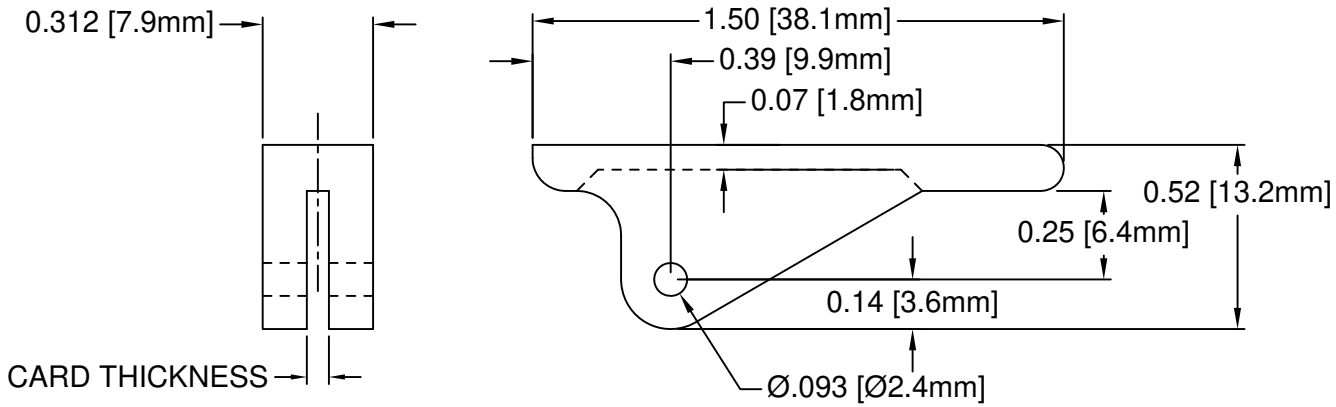


| PART NO. | COLOR | ROLL PIN | CARD THICK. |
|---|---|---|---|
| CP-56 WE | WHITE | RP-312 | 1/16"(1.6mm) |
| CP-56 XX | SEE S.#2 | RP-312 | |
| CP-59 WE | WHITE | RP-312 | 3/32"(2.4mm) |
| CP-59 XX | SEE S.#2 | RP-312 | |

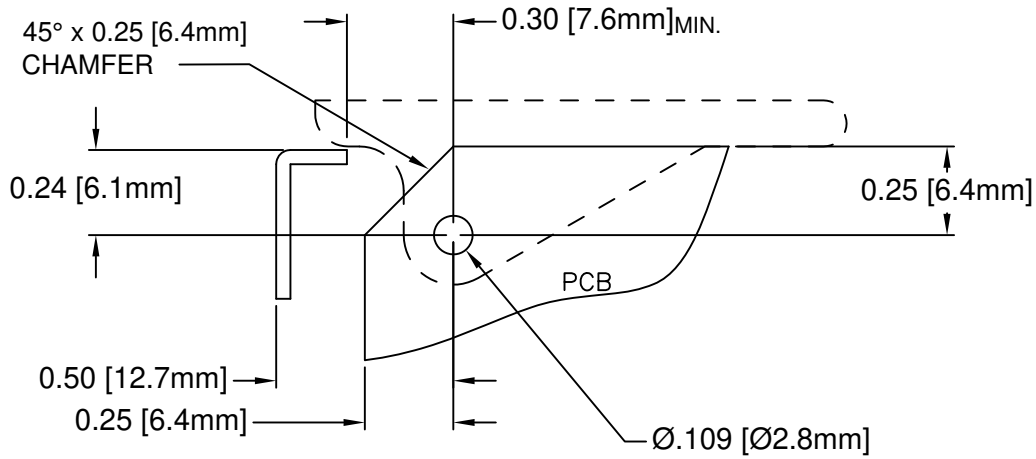


Recommended Application Layout

4. PRE-ASSEMBLED ROLL PINS AVAILABLE UPON REQUEST.
3. ROLL PINS INCLUDED. PACKAGED SEPARATELY.
2. MATERIAL: NYLON 6/6, 94V-2, WHITE.
1. GENERAL SPECIFICATIONS: BIVAR MOLDED COMPONENT SPECIFICATION BV00-E101.

STANDARD TOLERANCE
( UNLESS OTHERWISE SPECIFIED )

| DECIMALS | | ANGULAR |
|---|---|---|
| .X | ± .1 | X° ± 1° |
| .XX | ± .01 | |
| .XXX | ± .005 | |


BIVAR®
4 THOMAS, IRVINE, CA. 92618
TEL: (949) 951-8808 FAX: (949) 951-3974


TITLE: CIRCUIT BOARD CARD EJECTOR

| DESIGNED: | DATE: | PART NO: | REVISION: |
|---|---|---|---|
| D. Green | 10/17/02 | CP-5XX | D |
| CHECKED: M. Chen | DATE: 10/17/02 | CAGE CODE : 32559 | SHEET # 1 OF 2 |

CAD GENERATED DOCUMENT. DO NOT MEASURE DRAWING.

| REV. | DESCRIPTION | DATE | APPROVED |
|---|---|---|---|
| | SEE SHEET #1 | | |
| | | | |
| | | | |
| | | | |
| | | | |

OTHER AVAILABLE COLORS

* SEE TABLE FOR ORDERING INFORMATION

C P - 5 _ _ _

| CP SERIES |
|---|
| CP-56 |
| CP-59 |

| ORDER CODE | COLOR |
|---|---|
| AA | AQUA |
| BK | BLACK |
| BE | BLUE |
| BN | BROWN |
| FG | FOREST GREEN |
| GY | GRAY |
| GN | GREEN |
| LE | LIME |
| OE | ORANGE |
| PK | PINK |
| RD | RED |
| VT | VIOLET |
| YW | YELLOW |

5. PARTS ARE DYED TO COLOR UPON REQUEST.

STANDARD TOLERANCE
( UNLESS OTHERWISE SPECIFIED )
DECIMALS ANGULAR

BIVAR®
4 THOMAS, IRVINE, CA. 92618
TEL: (949) 951-8808 FAX: (949) 951-3974

TITLE: CIRCUIT BOARD CARD EJECTOR

| DESIGNED: | DATE: | PART NO: | REVISION: |
|---|---|---|---|
| D. Green | 10/17/02 | CP-5XX | D |
| CHECKED: M. Chen | DATE: 10/17/02 | CAGE CODE : 32559 | SHEET # 2 OF 2 |

CAD GENERATED DOCUMENT. DO NOT MEASURE DRAWING.