CP3BT10

CP3BT10 Reprogrammable Connectivity Processor with Bluetooth and USB Interfaces

Literature Number: SNOSAE8C

National Semiconductor

FINAL
APRIL 2005

CP3BT10 Reprogrammable Connectivity Processor with Bluetooth® and USB Interfaces

1.0 General Description

The CP3BT10 connectivity processor combines high performance with the massive integration needed for embedded Bluetooth applications. A powerful RISC core with on-chip SRAM and Flash memory provides high computing bandwidth, communications peripherals provide high I/O bandwidth, and an external bus provides system expandability.

On-chip communications peripherals include: Bluetooth Lower Link Controller, USB, ACCESS.bus, Microwire/SPI, UART, and Advanced Audio Interface (AAI). Additional on-chip peripherals include DMA controller, CVSD/PCM conversion module, Timing and Watchdog Unit, Versatile Timer Unit, Multi-Function Timer, and Multi-Input Wakeup.

Bluetooth hand-held devices can be both smaller and lower in cost for maximum consumer appeal. The low voltage and advanced power-saving modes achieve new design points in the trade-off between battery size and operating time for handheld and portable applications.

In addition to providing the features needed for the next generation of embedded Bluetooth products, the CP3BT10 is backed up by the software resources designers need for rapid time-to-market, including an operating system, Bluetooth protocol stack implementation, reference designs, and an integrated development environment. Combined with National's LMX5252 Bluetooth radio transceiver, the CP3BT10 provides a complete Bluetooth system solution.

National Semiconductor offers a complete and industry-proven application development environment for CP3BT10 applications, including the IAR Embedded Workbench, iSYSTEM winIDEA and iC3000 Active Emulator, Bluetooth Development Board, Bluetooth Protocol Stack, and Application Software.

Block Diagram

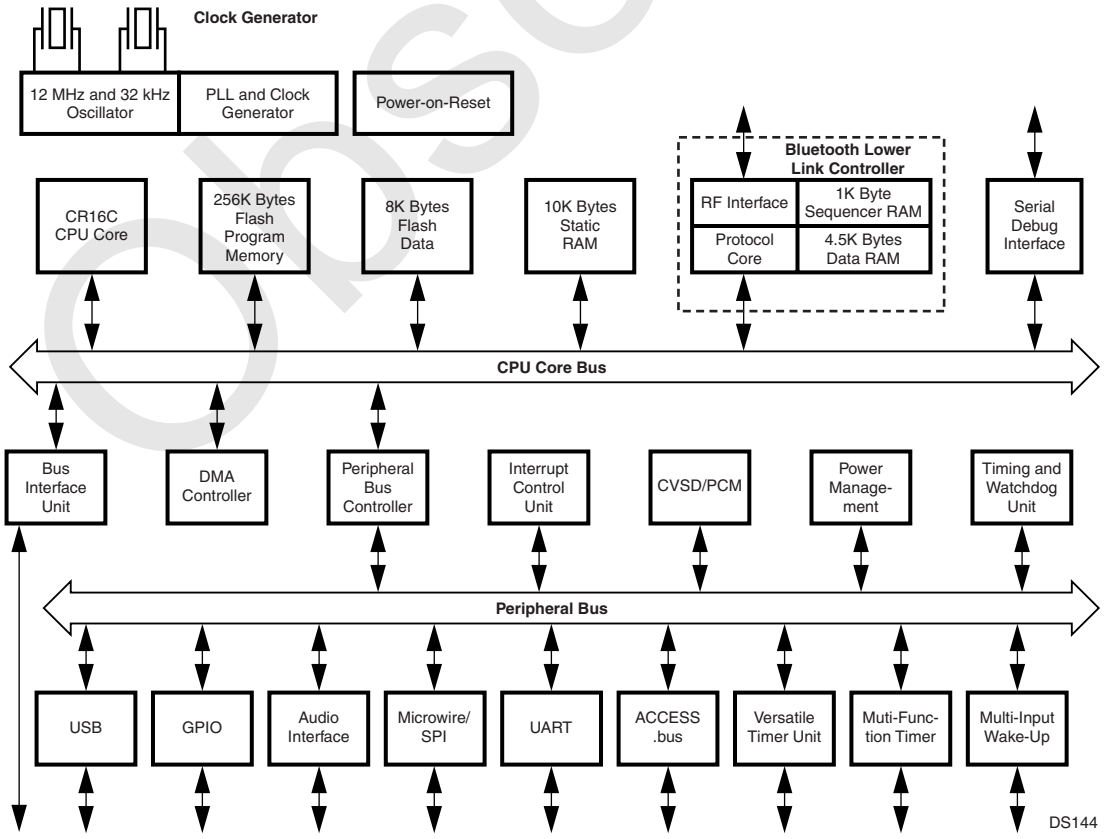

Bluetooth is a registered trademark of Bluetooth SIG, Inc. and is used under license by National Semiconductor.
TRI-STATE is a registered trademark of National Semiconductor Corporation.

©2005 National Semiconductor Corporation

Table of Contents

1.0 General Description . . . 1
2.0 CPU Features . . . 3
3.0 Device Overview . . . 4
3.1 CR16C CPU Core . . . 4
3.2 Memory . . . 4
3.3 Input/Output Ports . . . 4
3.4 Bus Interface Unit . . . 4
3.5 Interrupt Control Unit (ICU) . . . 4
3.6 Bluetooth LLC . . . 4
3.7 USB . . . 4
3.8 Multi-Input Wake-up . . . 5
3.9 Triple Clock and Reset . . . 5
3.10 Power Management . . . 5
3.11 Multi-Function Timer . . . 5
3.12 Versatile Timer Unit . . . 5
3.13 Timing and Watchdog Module . . . 5
3.14 UART . . . 5
3.15 Microwire/SPI . . . 5
3.16 ACCESS.bus Interface . . . 6
3.17 DMA Controller . . . 6
3.18 Advanced Audio interface . . . 6
3.19 CVSD/PCM Conversion Module . . . 6
3.20 Serial Debug Interface . . . 6
3.21 Development Support . . . 6
4.0 Device Pinouts . . . 7
4.1 Pin Descriptions . . . 12
5.0 CPU Architecture . . . 16
5.1 General-Purpose Registers . . . 16
5.2 Dedicated Address Registers . . . 16
5.3 Processor Status Register (PSR) . . . 17
5.4 Configuration Register (CFG) . . . 18
5.5 Addressing Modes . . . 19
5.6 Stacks . . . 20
5.7 Instruction Set . . . 20
6.0 Memory . . . 25
6.1 Operating Environment . . . 25
6.2 Bus Interface Unit (BIU) . . . 26
6.3 Bus Cycles . . . 26
6.4 BIU Control Registers . . . 26
6.5 Wait and Hold States . . . 29
7.0 System Configuration Registers . . . 30
7.1 Module Configuration Register (MCFG) . . . 30
7.2 Module Status Register (MSTAT) . . . 30
8.0 Flash Memory . . . 31
8.1 Flash Memory Protection . . . 31
8.2 Flash Memory Organization . . . 31
8.3 Flash Memory Operations . . . 32
8.4 Information Block Words . . . 33
8.5 Flash Memory Interface Registers . . . 35
9.0 DMA Controller . . . 41
9.1 Channel Assignment . . . 41
9.2 Transfer Types . . . 41
9.3 Operation Modes . . . 42
9.4 Software DMA Request . . . 43
9.5 Debug Mode . . . 43
9.6 DMA Controller Register Set . . . 43
10.0 Interrupts . . . 47
10.1 Non-Maskable Interrupts . . . 47
10.2 Maskable Interrupts . . . 47
10.3 Interrupt Controller Registers . . . 47
10.4 Maskable Interrupt Sources . . . 49
10.5 Nested Interrupts . . . 50
11.0 Triple Clock and Reset . . . 51
11.1 External Crystal Network . . . 52
11.2 Main Clock . . . 52
11.3 Slow Clock . . . 53
11.4 PLL Clock . . . 53
11.5 System Clock . . . 53
11.6 Auxiliary Clocks . . . 53
11.7 Power-On Reset . . . 53
11.8 External Reset . . . 53
11.9 Clock and Reset Registers . . . 55
12.0 Power Management . . . 57
12.1 Active Mode . . . 57
12.2 Power Save Mode . . . 57
12.3 Idle Mode . . . 57
12.4 Halt Mode . . . 57
12.5 Hardware Clock Control . . . 57
12.6 Power Management Registers . . . 58
12.7 Switching Between Power Modes . . . 59
13.0 Multi-Input Wake-Up . . . 61
13.1 Multi-Input Wake-Up Registers . . . 61
13.2 Programming Procedures . . . 63
14.0 Input/Output Ports . . . 64
14.1 Port Registers . . . 64
14.2 Open-Drain Operation . . . 67
15.0 Bluetooth Controller . . . 68
15.1 RF Interface . . . 68
15.2 Serial Interface . . . 69
15.3 LMX5251 Power-Up Sequence . . . 72
15.4 LMX5252 Power-Up Sequence . . . 72
15.5 Bluetooth Sleep Mode . . . 73
15.6 Bluetooth Global Registers . . . 73
15.7 Bluetooth Sequencer RAM . . . 73
15.8 Bluetooth Shared Data RAM . . . 74
16.0 USB Controller . . . 75
16.1 Functional States . . . 75
16.2 Endpoint Operation . . . 75
16.3 USB Controller Registers . . . 78
16.4 Transceiver Interface . . . 93
17.0 Advanced Audio Interface . . . 94
17.1 Audio Interface Signals . . . 94
17.2 Audio Interface Modes . . . 94
17.3 Bit Clock Generation . . . 97
17.4 Frame Clock Generation . . . 97
17.5 Audio Interface Operation . . . 97
17.6 Communication Options . . . 99
17.7 Audio Interface Registers . . . 102
17.8 Usage Hints . . . 108
18.0 CVSD/PCM Conversion Module . . . 109
18.1 Operation . . . 109
18.2 PCM Conversions . . . 109
18.3 CVSD Conversion . . . 110
18.4 PCM to CVSD Conversion . . . 110
18.5 CVSD to PCM Conversion . . . 110
18.6 Interrupt Generation . . . 110
18.7 DMA Support . . . 110
18.8 Freeze . . . 111
18.9 CVSD/PCM Converter Registers . . . 111
19.0 UART Module . . . 114
19.1 Functional Overview . . . 114
19.2 UART Operation . . . 114
19.3 UART Registers . . . 118
19.4 Baud Rate Calculations . . . 122
20.0 Microwire/SPI Interface . . . 124
20.1 Microwire Operation . . . 124
20.2 Master Mode . . . 126
20.3 Slave Mode . . . 127
20.4 Interrupt Generation . . . 127
20.5 Microwire Interface Registers . . . 127
21.0 ACCESS.bus Interface . . . 130
21.1 ACB Protocol Overview . . . 130
21.2 ACB Functional Description . . . 132
21.3 ACCESS.bus Interface Registers . . . 134
21.4 Usage Hints . . . 138
22.0 Timing and Watchdog Module . . . 139
22.1 TWM Structure . . . 139
22.2 Timer T0 Operation . . . 139
22.3 Watchdog Operation . . . 140
22.4 TWM Registers . . . 140
22.5 Watchdog Programming Procedure . . . 142
23.0 Multi-Function Timer . . . 143
23.1 Timer Structure . . . 143
23.2 Timer Operating Modes . . . 144
23.3 Timer Interrupts . . . 148
23.4 Timer I/O Functions . . . 148
23.5 Timer Registers . . . 149
24.0 Versatile Timer Unit (VTU) . . . 152
24.1 VTU Functional Description . . . 152
24.2 VTU Registers . . . 156
25.0 Register Map . . . 160
26.0 Register Bit Fields . . . 171
27.0 Electrical Characteristics . . . 182
27.1 Absolute Maximum Ratings . . . 182
27.2 DC Electrical Characteristics . . . 182
27.3 USB Transceiver Electrical Characteristics . . . 183
27.4 Flash Memory On-Chip Programming . . . 184
27.5 Output Signal Levels . . . 185
27.6 Clock and Reset Timing . . . 185
27.7 I/O Port Timing . . . 187
27.8 Advanced Audio Interface (AAI) Timing . . . 188
27.9 Microwire/SPI Timing . . . 190
27.10 ACCESS.bus Timing . . . 195
27.11 USB Port AC Characteristics . . . 198
27.12 Multi-Function Timer (MFT) Timing . . . 198
27.13 Versatile Timing Unit (VTU) Timing . . . 199
27.14 External Bus Timing . . . 200
28.0 Pin Assignments . . . 206
29.0 Revision History . . . 208
30.0 Physical Dimensions . . . 209

Obsolete

2.0 CPU Features

CPU Features

- Fully static RISC processor core, capable of operating from 0 to 24 MHz with zero wait/hold states
- Minimum 41.7 ns instruction cycle time with a 24-MHz internal clock frequency, based on a 12-MHz external input
- 30 independently vectored peripheral interrupts

On-Chip Memory

- 256K bytes reprogrammable Flash program memory
- 8K bytes Flash data memory
- 10K bytes of static RAM data memory
- Addresses up to 8 Mbytes of external memory

Broad Range of Hardware Communications Peripherals

- Bluetooth Lower Link Controller (LLC) including a shared 4.5K byte Bluetooth RAM and 1K byte Bluetooth Sequencer RAM
- Full-speed USB node including seven Endpoint-FIFOs conforming to USB 1.1 specification
- ACCESS.bus serial bus (compatible with Philips I^2C bus)
- 8/16-bit SPI, Microwire/Plus serial interface
- Universal Asynchronous Receiver/Transmitter (UART)
- Advanced Audio Interface (AAI) to connect to external 8/13-bit PCM Codecs as well as to ISDN-Controllers through the IOM-2 interface (slave only)
- CVSD/PCM converter supporting one bidirectional audio connection

General-Purpose Hardware Peripherals

- Dual 16-bit Multi-Function Timer
- Versatile Timer Unit with four subsystems (VTU)
- Four channel DMA controller
- Timing and Watchdog Unit

Flexible I/O

- Up to 37 general-purpose I/O pins (shared with on-chip peripheral I/O pins)
- Programmable I/O pin characteristics: TRI-STATE output, push-pull output, weak pull-up input, high-impedance input
- Schmitt triggers on general purpose inputs
- Multi-Input Wakeup

Extensive Power and Clock Management Support

- On-chip Phase Locked Loop
- Support for multiple clock options
- Dual clock and reset
- Power-down modes

Power Supply

- I/O port operation at 2.5V to 3.3V
- Core logic operation at 2.5V
- On-chip power-on reset

Temperature Range

- -40°C to +85°C (Industrial)

Packages

- CSP-48, LQFP-100

Complete Development Environment

- Pre-integrated hardware and software support for rapid prototyping and production
- Integrated environment
- Project manager
- Multi-file C source editor
- High-level C source debugger
- Comprehensive, integrated, one-stop technical support

Bluetooth Protocol Stack

- Applications can interface to the high-level protocols or directly to the low-level Host Controller Interface (HCI)
- Transport layer support allows HCI command-based interface over UART or USB port
- Baseband (Link Controller) minimizes the performance demand on the CPU
- Link Manager (LM)
- Logical Link Control and Adaptation Protocol (L2CAP)
- Service Discovery Protocol (SDP)
- RFCOMM Serial Port Emulation Protocol
- All packet types, piconet, and scatternet functionality supported

Obsolete

CP3BT10 Connectivity Processor Selection Guide

NSID	Speed (MHz)	Temp. Range	Program Flash (kBytes)	Data Flash (kBytes)	SRAM (kBytes)	External Address Lines	I/Os	Package Type	Pack Method
CP3BT10G38	24	-40° to +85°C	256	8	10	22	37	LQFP-100	Tray
CP3BT10G38X	24	-40° to +85°C	256	8	10	22	37	LQFP-100	1000-T&R
CP3BT10K38X	24	-40° to +85°C	256	8	10	0	21	CSP-48	2500-T&R
CP3BT10K38Y	24	-40° to +85°C	256	8	10	0	21	CSP-48	250-T&R

T&R = Tape and Reel

3.0 Device Overview

The CP3BT10 connectivity processor is complete microcomputer with all system timing, interrupt logic, program memory, data memory, I/O ports included on-chip, making them well-suited to a wide range of embedded applications. The block diagram on page 1 shows the major on-chip components of the CP3BT10.

3.1 CR16C CPU CORE

The CP3BT10 implements the CR16C CPU core module. The high performance of the CPU core results from the implementation of a pipelined architecture with a two-bytes-per-cycle pipelined system bus. As a result, the CPU can support a peak execution rate of one instruction per clock cycle.

For more information, please refer to the CR16C Programmer's Reference Manual (document number 424521772-101, which may be downloaded from National's web site at http://www.national.com).

3.2 MEMORY

The CP3BT10 supports a uniform linear address space of up to 16 megabytes. Three types of on-chip memory occupy specific regions within this address space:

- 256K bytes of Flash program memory
- 8K bytes of Flash data memory
- 10K bytes of static RAM
- Up to 8M bytes of external memory (100-pin devices)

The 256K bytes of Flash program memory are used to store the application program, Bluetooth protocol stack, and real-time operating system. The Flash memory has security features to prevent unintentional programming and to prevent unauthorized access to the program code. This memory can be programmed with an external programming unit or with the device installed in the application system (in-system programming).

The 8K bytes of Flash data memory are used for non-volatile storage of data entered by the end-user, such as configuration settings.

The 10K bytes of static RAM are used for temporary storage of data and for the program stack and interrupt stack. Read and write operations can be byte-wide or word-wide, depending on the instruction executed by the CPU.

Up to 8M bytes of external memory can be added on an external bus. The external bus is only available on devices in 100-pin packages.

For Flash program and data memory, the device internally generates the necessary voltages for programming. No additional power supply is required.

3.3 INPUT/OUTPUT PORTS

The device has up to 37 software-configurable I/O pins, organized into five ports called Port B, Port C, Port G, Port H, and Port I. Each pin can be configured to operate as a general-purpose input or general-purpose output. In addition, many I/O pins can be configured to operate as inputs or outputs for on-chip peripheral modules such as the UART, timers, or Microwire/SPI interface.

The I/O pin characteristics are fully programmable. Each pin can be configured to operate as a TRI-STATE output, push-pull output, weak pull-up input, or high-impedance input.

3.4 BUS INTERFACE UNIT

The Bus Interface Unit (BIU) controls access to internal/external memory and I/O. It determines the configured parameters for bus access (such as the number of wait states for memory access) and issues the appropriate bus signals for each requested access.

The BIU uses a set of control registers to determine how many wait states and hold states are used when accessing Flash program memory, and the I/O area (Port B and Port C). At start-up, the configuration registers are set for slowest possible memory access. To achieve fastest possible program execution, appropriate values must be programmed. These settings vary with the clock frequency and the type of off-chip device being accessed.

3.5 INTERRUPT CONTROL UNIT (ICU)

The ICU receives interrupt requests from internal and external sources and generates interrupts to the CPU. An interrupt is an event that temporarily stops the normal flow of program execution and causes a separate interrupt handler to be executed. After the interrupt is serviced, CPU execution continues with the next instruction in the program following the point of interruption.

Interrupts from the timers, UART, Microwire/SPI interface, and Multi-Input Wake-Up, are all maskable interrupts; they can be enabled or disabled by software. There are 32 maskable interrupts, assigned to 32 linear priority levels.

The highest-priority interrupt is the Non-Maskable Interrupt ($\overline{\text{NMI}}$), which is generated by a signal received on the $\overline{\text{NMI}}$ input pin.

3.6 BLUETOOTH LLC

The integrated hardware Bluetooth Lower Link Controller (LLC) complies to the Bluetooth Specification Version 1.1 and integrates the following functions:

- 4.5K-byte dedicated Bluetooth data RAM
- 1K-byte dedicated Bluetooth Sequencer RAM
- Support of all Bluetooth 1.1 packet types
- Support for fast frequency hopping of 1600 hops/s
- Access code correlation and slot timing recovery circuit
- Power Management Control Logic
- BlueRF-compatible interface to connect with National's LMX5252 and other RF transceiver chips

3.7 USB

The USB node is a Universal Serial Bus (USB) Node controller compatible with USB Specification, 1.0 and 1.1. It integrates the required USB transceiver, the Serial Interface Engine (SIE), and USB endpoint FIFOs. A total of seven endpoint pipes are supported: one bidirectional pipe for the mandatory control EP0 and an additional six pipes for unidirectional endpoints to support USB interrupt, bulk, and isochronous data transfers.

Obsolete

3.8 MULTI-INPUT WAKE-UP

The Multi-Input Wake-Up (MIWU) module can be used for either of two purposes: to provide inputs for waking up (exiting) from the Halt, Idle, or Power Save mode; or to provide general-purpose edge-triggered maskable interrupts from external sources. This 16-channel module generates four programmable interrupts to the CPU based on the signals received on its 16 input channels. Channels can be individually enabled or disabled, and programmed to respond to positive or negative edges.

3.9 TRIPLE CLOCK AND RESET

The Triple Clock and Reset module generates a high-speed main System Clock from an external crystal network. It also provides the main system reset signal and a power-on reset function.

This module generates a slow System Clock (32.768 kHz) from an optional external crystal network. The Slow Clock is used for operating the device in power-save mode. The 32.768 kHz external crystal network is optional, because the low speed System Clock can be derived from the high-speed clock by a prescaler. Also, two independent clocks divided down from the high speed clock are available on output pins.

The Triple Clock and Reset module provides the clock signals required for the operation of the various CP3BT10 on-chip modules. From external crystal networks, it generates the Main Clock, which can be scaled up to 24 MHz from an external 12 MHz input clock, and a 32.768 kHz secondary System Clock. The 12 MHz external clock is primarily used as the reference frequency for the on-chip PLL. Also the clock for modules which require a fixed clock rate (e.g. the Bluetooth LLC and the CVSD/PCM transcoder) is generated through prescalers from the 12 MHz clock. The PLL generates the input clock for the USB node and may be used to drive the high-speed System Clock through a prescaler. Alternatively, the high speed System Clock can be derived directly from the 12 MHz Main Clock.

In addition, this module generates the device reset by using reset input signals coming from an external reset and various on-chip modules.

3.10 POWER MANAGEMENT

The Power Management Module (PMM) improves the efficiency of the device by changing the operating mode and power consumption to match the required level of activity.

The device can operate in any of four power modes:

- *Active*—The device operates at full speed using the high-frequency clock. All device functions are fully operational.
- *Power Save*—The device operates at reduced speed using the Slow Clock. The CPU and some modules can continue to operate at this low speed.
- *Idle*—The device is inactive except for the Power Management Module and Timing and Watchdog Module, which continue to operate using the Slow Clock.
- *Halt*—The device is inactive but still retains its internal state (RAM and register contents).

3.11 MULTI-FUNCTION TIMER

The Multi-Function Timer (MFT) module contains a pair of 16-bit timer/counter registers. Each timer/counter unit can be configured to operate in any of the following modes:

- *Processor-Independent Pulse Width Modulation (PWM) mode*—Generates pulses of a specified width and duty cycle and provides a general-purpose timer/counter.
- *Dual Input Capture mode*—Measures the elapsed time between occurrences of external event and provides a general-purpose timer/counter.
- *Dual Independent Timer mode*—Generates system timing signals or counts occurrences of external events.
- *Single Input Capture and Single Timer mode*—Provides one external event counter and one system timer.

3.12 VERSATILE TIMER UNIT

The Versatile Timer Unit (VTU) module contains four independent timer subsystems, each operating in either dual 8-bit PWM configuration, as a single 16-bit PWM timer, or a 16-bit counter with two input capture channels. Each of the four timer subsystems offer an 8-bit clock prescaler to accommodate a wide range of frequencies.

3.13 TIMING AND WATCHDOG MODULE

The Timing and Watchdog Module (TWM) contains a Real-Time timer and a Watchdog unit. The Real-Time Clock Timing function can be used to generate periodic real-time based system interrupts. The timer output is one of 16 inputs to the Multi-Input-Wake-Up module which can be used to exit from a power-saving mode. The Watchdog unit is designed to detect the application program getting stuck in an infinite loop resulting in loss of program control or “runaway” programs. When the watchdog triggers, it resets the device. The TWM is clocked by the low-speed System Clock.

3.14 UART

The UART supports a wide range of programmable baud rates and data formats, parity generation, and several error detection schemes. The baud rate is generated on-chip, under software control.

The UART offers a wake-up condition from the power-save mode using the Multi-Input Wake-Up module.

3.15 MICROWIRE/SPI

The Microwire/SPI (MWSPI) interface module supports synchronous serial communications with other devices that conform to Microwire or Serial Peripheral Interface (SPI) specifications. It supports 8-bit and 16-bit data transfers.

The Microwire interface allows several devices to communicate over a single system consisting of four wires: serial in, serial out, shift clock, and slave enable. At any given time, the Microwire interface operates as the master or a slave. The Microwire interface supports the full set of slave select for multi-slave implementation.

In master mode, the shift clock is generated on chip under software control. In slave mode, a wake-up out of power-save mode is triggered using the Multi-Input Wake-Up module.

Obsolete

3.16 ACCESS.BUS INTERFACE

The ACCESS.bus interface module (ACB) is a two-wire serial interface with the ACCESS.bus physical layer. It is also compatible with Intel's System Management Bus (SMBus) and Philips' I^2C bus. The ACB module can be configured as a bus master or slave, and can maintain bidirectional communications with both multiple master and slave devices.

The ACCESS.bus receiver can trigger a wake-up condition out of the low-power modes using the Multi-Input Wake-Up module.

3.17 DMA CONTROLLER

The Direct Memory Access Controller (DMAC) can speed up data transfer between memory and I/O devices or between two memories, relative to data transfers performed directly by the CPU. A method called cycle-stealing allows the CPU and the DMAC to use the core bus in parallel. The DMAC implements four independent DMA channels. DMA requests from a primary and a secondary source are recognized for each DMA channel, as well as a software DMA request issued directly by the CPU. Table 1 shows the DMA channel assignment on the CP3BT10 architecture. The following on-chip modules can assert a DMA request to the DMAC:

- CR16C (Software DMA request)
- USB
- UART
- Advanced Audio Interface
- CVSD/PCM Converter

Table 1 shows how the four DMA channels are assigned to the modules listed above.

Table 1 DMA Channel Assignment

Channel	Primary/ Secondary	Peripheral	Transaction
0	Primary	USB	Read/Write
	Secondary	UART	Read
1	Primary	UART	Write
	Secondary	Unused	N/A
2	Primary	AAI	Read
	Secondary	CVSD/PCM	Read
3	Primary	AAI	Write
	Secondary	CVSD/PCM	Write

3.18 ADVANCED AUDIO INTERFACE

The audio interface provides a serial synchronous, full-duplex interface to codecs and similar serial devices. Transmit and receive paths operate asynchronously with respect to each other. Each path uses three signals for communication: shift clock, frame synchronization, and data.

In case receive and transmit use separate shift clocks and frame sync signals, the interface operates in its asynchronous mode. Alternatively, the transmit and receive path can share the same shift clock and frame sync signals for synchronous mode operation.

The interface can handle data words of either 8- or 16-bit length and data frames can consist of up to four slots.

In the normal mode of operation, the interface only transfers one word at a periodic rate. In the network mode, the interface transfers multiple words at a periodic rate. The periodic rate is also called a data frame and each word within one frame is called a slot. The beginning of each new data frame is marked by the frame sync signal.

3.19 CVSD/PCM CONVERSION MODULE

The CVSD/PCM module performs conversion between CVSD and PCM data, in which the CVSD encoding is as defined in the Bluetooth specification 1.0 and the PCM data can be 8-bit µ-Law, 8-bit A-Law, or 13-bit to 16-bit Linear.

3.20 SERIAL DEBUG INTERFACE

The Serial Debug Interface module (SDI module) provides a JTAG-based serial link to an external debugger, for example running on a PC. In addition, the SDI module integrates an on-chip debug module, which allows the user to set up to four hardware breakpoints on instruction execution and data transfer. The SDI module can act as a CPU bus master to access all memory mapped resources, such as RAM and peripherals. It also provides fast program download into the on-chip Flash program memory using the JTAG interface.

Note: The SDI module may assert Freeze mode to gather information, which may cause periodic fluctuations in response (bus availability, interrupt latency, etc.). Anomalous behavior often may be traced to SDI activity.

3.21 DEVELOPMENT SUPPORT

In addition to providing the features needed for the next generation of embedded Bluetooth products, the CP3BT10 is backed up by the software resources designers need for rapid time-to-market, including an operating system, Bluetooth protocol stack implementation, peripheral drivers, reference designs, and an integrated development environment. Combined with National's LMX5252 Bluetooth radio transceiver, the CP3BT10 provides a total Bluetooth system solution.

National Semiconductor offers a complete and industry-proven application development environment for CP3BT10 applications, including the IAR Embedded Workbench, iSYSTEM winIDEA and iC3000 Active Emulator, Bluetooth Development Board, Bluetooth Protocol Stack, and Application Software. See your National Semiconductor sales representative for current information on availability and features of emulation equipment and evaluation boards.

Obsolete

4.0 Device Pinouts

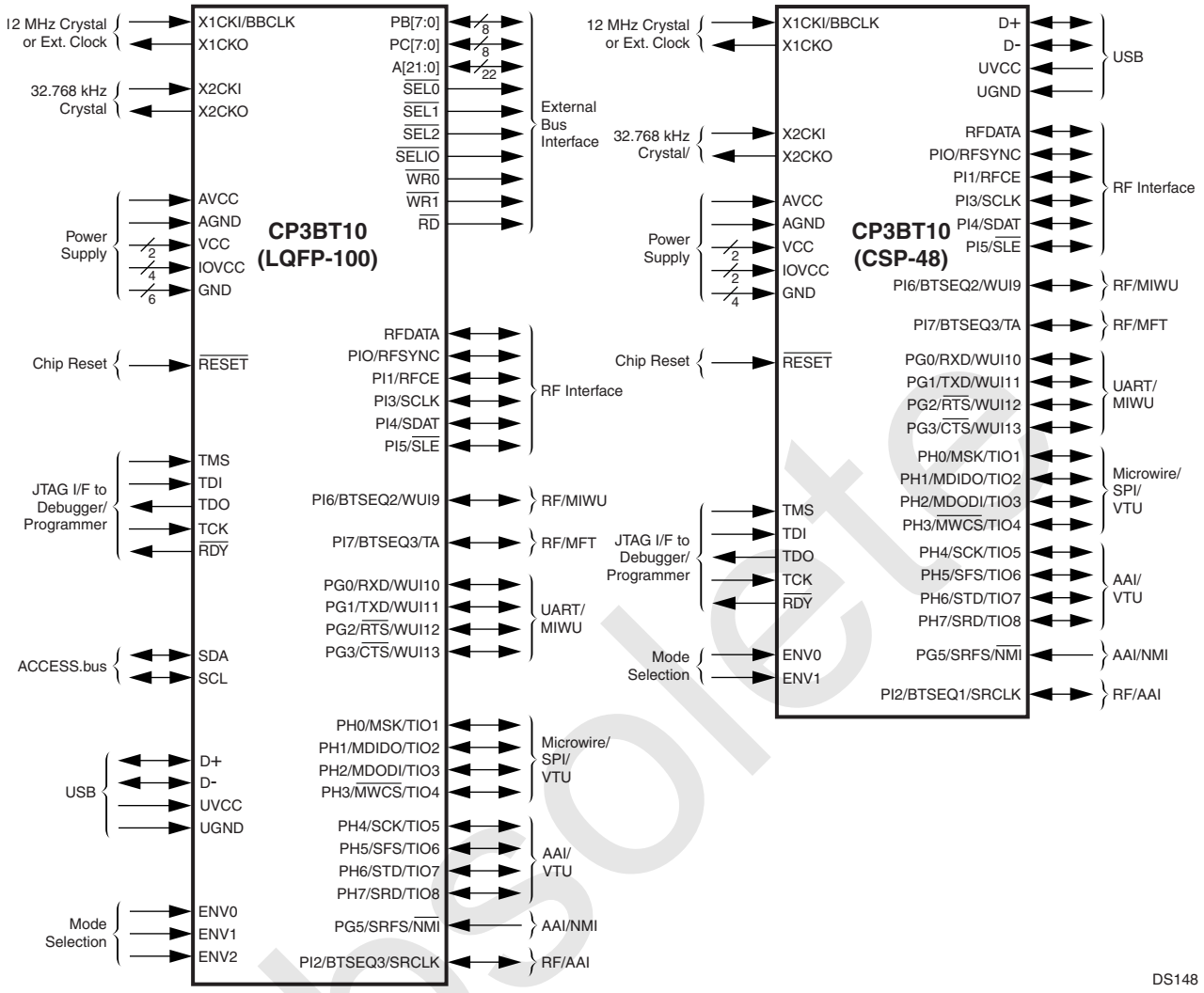

Table 2 Pin Assignments for 100-Pin Package

Pin Name	Alternate Function(s)	Pin Numbers	Type
A14		1	O
A13		2	O
A12		3	O
A11		4	O
A10		5	O
PH6	STD/TIO7	6	GPIO
PH7	SRD/TIO8	7	GPIO
ENV1		8	I/O
A9		9	O
A8		10	O
A7		11	O
A6		12	O
A5		13	O

Obsolete

Table 2 Pin Assignments for 100-Pin Package

Pin Name	Alternate Function(s)	Pin Numbers	Type
A4		14	O
VCC		15	PWR
X2CKI		16	I
X2CKO		17	O
GND		18	PWR
AVCC		19	PWR
AGND		20	PWR
IOVCC		21	PWR
X1CKO		22	O
X1CKI	BBCLK	23	I
GND		24	PWR
RFDATA		25	I/O
A3		26	O
A2		27	O
A1		28	O
A0		29	O
PI0	RFSYNC	30	GPIO
PI1	RFCE	31	GPIO
PI2	BTSEQ1/SRCLK	32	GPIO
PB0	D0	33	GPIO
PB1	D1	34	GPIO
PB2	D2	35	GPIO
PB3	D3	36	GPIO
PB4	D4	37	GPIO
PB5	D5	38	GPIO
PB6	D6	39	GPIO
PB7	D7	40	GPIO
GND		41	PWR
IOVCC		42	PWR
PI3	SCLK	43	GPIO
PI4	SDAT	44	GPIO
PI5	$\overline{\text{SLE}}$	45	GPIO
PI6	BTSEQ2/WUI9	46	GPIO
PI7	BTSEQ3/TA	47	GPIO
PG0	RXD/WUI10	48	GPIO
PG1	TXD/WUI11	49	GPIO
PC0	D8	50	GPIO
PG2	$\overline{\text{RTS}}$/WUI12	51	GPIO
PG3	$\overline{\text{CTS}}$/WUI13	52	GPIO
PC1	D9	53	GPIO
PC2	D10	54	GPIO
PC3	D11	55	GPIO
PC4	D12	56	GPIO

Obsolete

Table 2 Pin Assignments for 100-Pin Package

Pin Name	Alternate Function(s)	Pin Numbers	Type
PC5	D13	57	GPIO
PC6	D14	58	GPIO
PC7	D15	59	GPIO
PG5	SRFS/$\overline{\text{NMI}}$	60	GPIO
TMS		61	I
TCK		62	I
TDI		63	I
GND		64	PWR
IOVCC		65	PWR
ENV2		66	I/O
SEL0		67	O
SCL		68	I/O
SDA		69	I/O
TDO		70	O
D-		71	I/O
D+		72	I/O
UVCC		73	PWR
UGND		74	PWR
RDY		75	O
SEL1		76	O
SEL2		77	O
SELIO		78	O
A21		79	O
A20		80	O
PH0	MSK/TIO1	81	GPIO
PH1	MDIDO/TIO2	82	GPIO
PH2	MDODI/TIO3	83	GPIO
PH3	$\overline{\text{MWCS}}$/TIO4	84	GPIO
ENV0		85	I/O
IOVCC		86	PWR
GND		87	PWR
VCC		88	PWR
GND		89	PWR
RESET		90	I
RD		91	O
WR0		92	O
WR1		93	O
A19		94	O
A18		95	O
A17		96	O
A16		97	O
A15		98	O

Obsolete

Table 2 Pin Assignments for 100-Pin Package

Pin Name	Alternate Function(s)	Pin Numbers	Type
PH4	SCK/TIO5	99	GPIO
PH5	SFS/TIO6	100	GPIO

Note 1: The ENV0, ENV1, ENV2, TCK, TDI, and TMS pins each have a weak pull-up to keep the input from floating.
Note 2: The $\overline{\text{RESET}}$ input has a weak pulldown.
Note 3: These functions are always enabled, due to the direct low-impedance path to these pins.

Table 3 Pin Assignments for 48-Pin Package

Pin Name	Alternate Function(s)	Pin Number	Type
PH6	STD/TIO7	1	GPIO
PH7	SRD/TIO8	2	GPIO
ENV1		3	I/O
VCC		4	PWR
X2CKI		5	I
X2CKO		6	O
GND		7	PWR
AVCC		8	PWR
AGND		9	PWR
IOVCC		10	PWR
X1CKO		11	O
X1CKI	BBCLK	12	I
GND		13	PWR
RFDATA		14	I/O
PI0	RFSYNC	15	GPIO
PI1	RFCE	16	GPIO
PI2	BTSEQ1/SRCLK	17	GPIO
PI3	SCLK	18	GPIO
PI4	SDAT	19	GPIO
PI5	$\overline{\text{SLE}}$	20	GPIO
PI6	BTSEQ2/WUI9	21	GPIO
PI7	BTSEQ3/TA	22	GPIO
PG0	RXD/WUI10	23	GPIO
PG1	TXD/WUI11	24	GPIO
PG2	$\overline{\text{RTS}}$/WUI12	25	GPIO
PG3	$\overline{\text{CTS}}$/WUI13	26	GPIO
PG5	SRFS/$\overline{\text{NMI}}$	27	GPIO
TMS		28	I
TCK		29	I
TDI		30	I
GND		31	PWR
IOVCC		32	PWR
TDO		33	O, GPIO
D-		34	O, GPIO
D+		35	I/O
UVCC		36	PWR, I/O

Obsolete

Pin Name	Alternate Function(s)	Pin Number	Type
UGND		37	PWR, O
$\overline{\text{RDY}}$		38	O
PH0	MSK/TIO1	39	GPIO
PH1	MDIDO/TIO2	40	GPIO
PH2	MDODI/TIO3	41	GPIO
PH3	$\overline{\text{MWCS}}$/TIO4	42	GPIO
ENV0		43	I/O
VCC		44	PWR
GND		45	PWR
$\overline{\text{RESET}}$		46	I
PH4	SCK/TIO5	47	GPIO
PH5	SFS/TIO6	48	GPIO

Note 1: The ENV0, ENV1 and ENV2, TCK, TDI and TMS pins each have a weak pull-up to keep the input from floating.
Note 2: The $\overline{\text{RESET}}$ input has a weak pulldown.
Note 3: These functions are always enabled, due to the direct low-impedance path to these pins.

Obsolete

4.1 PIN DESCRIPTIONS

Some pins may be enabled as general-purpose I/O-port pins or as alternate functions associated with specific peripherals or interfaces. These pins may be individually configured as port pins, even when the associated peripheral or interface is enabled. Table 4 lists the device pins.

Table 4 CP3BT10 Pin Descriptions for the 100-Pin LQFP Package

Name	Pins	I/O	Primary Function	Alternate Name	Alternate Function
X1CKI	1	Input	12 MHz Oscillator Input	BBCLK	BB reference clock for the RF Interface
X1CKO	1	Output	12 MHz Oscillator Output	None	None
X2CKI	1	Input	32 kHz Oscillator Input	None	None
X2CKO	1	Output	32 kHz Oscillator Output	None	None
AVCC	1	Input	PLL Analog Power Supply	None	None
IOVCC	4	Input	2.5V - 3.3V I/O Power Supply	None	None
VCC	2	Input	2.5V Core Logic Power Supply	None	None
GND	6	Input	Reference Ground	None	None
AGND	1	Input	PLL Analog Ground	None	None
$\overline{\text{RESET}}$	1	Input	Chip general reset	None	None
TMS	1	Input	JTAG Test Mode Select (with internal weak pull-up)	None	None
TDI	1	Input	JTAG Test Data Input (with internal weak pull-up)	None	None
TDO	1	Output	JTAG Test Data Output	None	None
TCK	1	Input	JTAG Test Clock Input (with internal weak pull-up)	None	None
$\overline{\text{RDY}}$	1	Output	NEXUS Ready Output	None	None
PG0	1	I/O	Generic I/O	RXD	UART Receive Data Input
				WUI10	Multi-Input Wake-Up Channel 10
PG1	1	I/O	Generic I/O	TXD	UART Transmit Data Output
				WUI11	Multi-Input Wake-Up Channel 11
PG2	1	I/O	Generic I/O	$\overline{\text{RTS}}$	UART Ready-To-Send Output
				WUI12	Multi-Input Wake-Up Channel 12
PG3	1	I/O	Generic I/O	$\overline{\text{CTS}}$	UART Clear-To-Send Input
				WUI13	Multi-Input Wake-Up Channel 13
PG5	1	I/O	Generic I/O	SRFS	AAI Receive Frame Sync
				$\overline{\text{NMI}}$	Non-Maskable Interrupt Input
PH0	1	I/O	Generic I/O	MSK	SPI Shift Clock
				TIO1	Versatile Timer Channel 1
PH1	1	I/O	Generic I/O	MDIDO	SPI Master In Slave Out
				TIO2	Versatile Timer Channel 2
PH2	1	I/O	Generic I/O	MDODI	SPI Master Out Slave In
				TIO3	Versatile Timer Channel 3

Obsolete

Name	Pins	I/O	Primary Function	Alternate Name	Alternate Function
PH3	1	I/O	Generic I/O	$\overline{\text{MWCS}}$	SPI Slave Select Input
				TIO4	Versatile Timer Channel 4
PH4	1	I/O	Generic I/O	SCK	AAI Clock
				TIO5	Versatile Timer Channel 5
PH5	1	I/O	Generic I/O	SFS	AAI Frame Synchronization
				TIO6	Versatile Timer Channel 6
PH6	1	I/O	Generic I/O	STD	AAI Transmit Data Output
				TIO7	Versatile Timer Channel 7
PH7	1	I/O	Generic I/O	SRD	AAI Receive Data Input
				TIO8	Versatile Timer Channel 8
RFDATA	1	I/O	Bluetooth RX/TX Data Pin	None	None
PI0	1	I/O	Generic I/O	RFSYNC	BT AC Correlation/TX Enable Output
PI1	1	I/O	Generic I/O	RFCE	BT RF Chip Enable Output
PI2	1	I/O	Generic I/O	BTSEQ1	Bluetooth Sequencer Status
				SRCLK	AAI Receive Clock
PI3	1	I/O	Generic I/O	SCLK	BT Serial I/F Shift Clock Output
PI4	1	I/O	Generic I/O	SDAT	BT Serial I/F Data
PI5	1	I/O	Generic I/O	$\overline{\text{SLE}}$	BT Serial I/F Load Enable Output
PI6	1	I/O	Generic I/O	WUI9	Multi-Input Wake-Up Channel 9
				BTSEQ2	Bluetooth Sequencer Status
PI7	1	I/O	Generic I/O	TA	Multi Function Timer Port A
				BTSEQ3	Bluetooth Sequencer Status
SDA	1	I/O	ACCESS.bus Serial Data	None	None
SCL	1	I/O	ACCESS.bus Clock	None	None
D+	1	I/O	USB D+ Upstream Port	None	None
D-	1	I/O	USB D- Upstream Port	None	None
UVCC	1	Input	3.3V USB Transceiver Supply	None	None
UGND	1	Input	USB Transceiver Ground	None	None
PB[7:0]	8	I/O	Generic I/O	D[7:0]	External Data Bus Bit 0 to 7
PC[7:0]	8	I/O	Generic I/O	D[15:8]	External Data Bus Bit 8 to 15
A[21:0]	22	Output	External Address Bus Bit 0 to 21	None	None
$\overline{\text{SEL0}}$	1	Output	Chip Select for Zone 0	None	None
$\overline{\text{SEL1}}$	1	Output	Chip Select for Zone 1	None	None
$\overline{\text{SEL2}}$	1	Output	Chip Select for Zone 2	None	None
$\overline{\text{SELIO}}$	1	Output	Chip Select for Zone I/O Zone	None	None
$\overline{\text{WR0}}$	1	Output	External Memory Write Low Byte	None	None
$\overline{\text{WR1}}$	1	Output	External Memory Write High Byte	None	None

Obsolete

Name	Pins	I/O	Primary Function	Alternate Name	Alternate Function
$\overline{RD}$	1	Output	External Memory Read	None	None
ENV0	1	I/O	Special mode select input with internal pull-up during reset	PLLCLK	PLL Clock Output
ENV1	1	I/O	Special mode select input with internal pull-up during reset	CPUCLK	CPU Clock Output
ENV2	1	I/O	Special mode select input with internal pull-up during reset	SLOWCLK	Slow Clock Output

Table 5 CP3BT10 Pin Descriptions for the 48-Pin CSP

Name	Pins	I/O	Primary Function	Alternate Name	Alternate Function
X1CKI	1	Input	12 MHz Oscillator Input	BBCLK	BB reference clock for the RF Interface
X1CKO	1	Output	12 MHz Oscillator Output	None	None
X2CKI	1	Input	32 kHz Oscillator Input	None	None
X2CKO	1	Output	32 kHz Oscillator Output	None	None
AVCC	1	Input	PLL Analog Power Supply	None	None
IOVCC	2	Input	2.5V - 3.3V I/O Power Supply	None	None
VCC	2	Input	2.5V Core Logic Power Supply	None	None
GND	4	Input	Reference Ground	None	None
AGND	1	Input	PLL Analog Ground	None	None
$\overline{RESET}$	1	Input	Chip general reset	None	None
TMS	1	Input	JTAG Test Mode Select (with internal weak pull-up)	None	None
TDI	1	Input	JTAG Test Data Input (with internal weak pull-up)	None	None
TDO	1	Output	JTAG Test Data Output	None	None
TCK	1	Input	JTAG Test Clock Input (with internal weak pull-up)	None	None
$\overline{RDY}$	1	Output	NEXUS Ready Output	None	None
PG0	1	I/O	Generic I/O	RXD	UART Receive Data Input
				WUI10	Multi-Input Wake-Up Channel 10
PG1	1	I/O	Generic I/O	TXD	UART Transmit Data Output
				WUI11	Multi-Input Wake-Up Channel 11
PG2	1	I/O	Generic I/O	$\overline{RTS}$	UART Ready-To-Send Output
				WUI12	Multi-Input Wake-Up Channel 12
PG3	1	I/O	Generic I/O	$\overline{CTS}$	UART Clear-To-Send Input
				WUI13	Multi-Input Wake-Up Channel 13
PG5	1	I/O	Generic I/O	SRFS	AAI Receive Frame Sync
				$\overline{NMI}$	Non-Maskable Interrupt Input

Obsolete

Name	Pins	I/O	Primary Function	Alternate Name	Alternate Function
PH0	1	I/O	Generic I/O	MSK	SPI Shift Clock
				TIO1	Versatile Timer Channel 1
PH1	1	I/O	Generic I/O	MDIDO	SPI Master In Slave Out
				TIO2	Versatile Timer Channel 2
PH2	1	I/O	Generic I/O	MDODI	SPI Master Out Slave In
				TIO3	Versatile Timer Channel 3
PH3	1	I/O	Generic I/O	$\overline{\text{MWCS}}$	SPI Slave Select Input
				TIO4	Versatile Timer Channel 4
PH4	1	I/O	Generic I/O	SCK	AAI Clock
				TIO5	Versatile Timer Channel 5
PH5	1	I/O	Generic I/O	SFS	AAI Frame Synchronization
				TIO6	Versatile Timer Channel 6
PH6	1	I/O	Generic I/O	STD	AAI Transmit Data Output
				TIO7	Versatile Timer Channel 7
PH7	1	I/O	Generic I/O	SRD	AAI Receive Data Input
				TIO8	Versatile Timer Channel 8
RFDATA	1	I/O	Bluetooth RX/TX Data Pin	None	None
PI0	1	I/O	Generic I/O	RFSYNC	BT AC Correlation/TX Enable Output
PI1	1	I/O	Generic I/O	RFCE	BT RF Chip Enable Output
PI2	1	I/O	Generic I/O	BTSEQ1	Bluetooth Sequencer Status
				SRCLK	AAI Receive Clock
PI3	1	I/O	Generic I/O	SCLK	BT Serial I/F Shift Clock Output
PI4	1	I/O	Generic I/O	SDAT	BT Serial I/F Data
PI5	1	I/O	Generic I/O	$\overline{\text{SLE}}$	BT Serial I/F Load Enable Output
PI6	1	I/O	Generic I/O	WUI9	Multi-Input Wake-Up Channel 9
				BTSEQ2	Bluetooth Sequencer Status
PI7	1	I/O	Generic I/O	TA	Multi Function Timer Port A
				BTSEQ3	Bluetooth Sequencer Status
D+	1	I/O	USB D+ Upstream Port	None	None
D-	1	I/O	USB D- Upstream Port	None	None
UVCC	1	Input	3.3V USB Transceiver Supply	None	None
UGND	1	Input	USB Transceiver Ground	None	None
ENV0	1	I/O	Special mode select input with internal pull-up during reset	PLLCLK	PLL Clock Output
ENV1	1	I/O	Special mode select input with internal pull-up during reset	CPUCLK	CPU Clock Output

Obsolete

5.0 CPU Architecture

The CP3BT10 uses the CR16C third-generation 16-bit CompactRISC processor core. The CPU implements a Reduced Instruction Set Computer (RISC) architecture that allows an effective execution rate of up to one instruction per clock cycle. For a detailed description of the CPU16C architecture, see the *CompactRISC CR16C Programmer's Reference Manual* which is available on the National Semiconductor web site (http://www.nsc.com).

The CR16C CPU core includes these internal registers:

- General-purpose registers (R0-R13, RA, and SP)
- Dedicated address registers (PC, ISP, USP, and INTBASE)
- Processor Status Register (PSR)
- Configuration Register (CFG)

The R0-R11, PSR, and CFG registers are 16 bits wide. The R12, R13, RA, SP, ISP and USP registers are 32 bits wide. The PC register is 24 bits wide. Figure 1 shows the CPU registers.

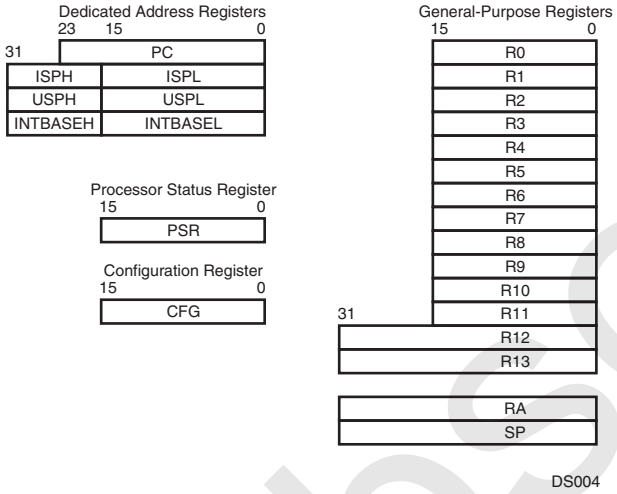

Figure 1. CPU Registers

Some register bits are designated as "reserved." Software must write a zero to these bit locations when it writes to the register. Read operations from reserved bit locations return undefined values.

5.1 GENERAL-PURPOSE REGISTERS

The CompactRISC CPU features 16 general-purpose registers. These registers are used individually as 16-bit operands or as register pairs for operations on addresses greater than 16 bits.

- General-purpose registers are defined as R0 through R13, RA, and SP.
- Registers are grouped into pairs based on the setting of the Short Register bit in the Configuration Register (CFG.SR). When the CFG.SR bit is set, the grouping of register pairs is upward-compatible with the architecture of the earlier CR16A/B CPU cores: (R1,R0), (R2,R1) ... (R11,R10), (R12_L, R11), (R13_L, R12_L), (R14_L, R13_L) and SP. (R14_L, R13_L) is the same as (RA,ERA).
- When the CFG.SR bit is clear, register pairs are grouped in the manner used by native CR16C software: (R1,R0), (R2,R1) ... (R11,R10), (R12_L, R11), R12, R13, RA, SP. R12, R13, RA, and SP are 32-bit registers for holding addresses greater than 16 bits.

With the recommended calling convention for the architecture, some of these registers are assigned special hardware and software functions. Registers R0 to R13 are for general-purpose use, such as holding variables, addresses, or index values. The SP register holds a pointer to the program runtime stack. The RA register holds a subroutine return address. The R12 and R13 registers are available to hold base addresses used in the index addressing mode.

If a general-purpose register is specified by an operation that is 8 bits long, only the lower byte of the register is used; the upper part is not referenced or modified. Similarly, for word operations on register pairs, only the lower word is used. The upper word is not referenced or modified.

5.2 DEDICATED ADDRESS REGISTERS

The CR16C has four dedicated address registers to implement specific functions: the PC, ISP, USP, and INTBASE registers.

5.2.1 Program Counter (PC) Register

The 24-bit value in the PC register points to the first byte of the instruction currently being executed. CR16C instructions are aligned to even addresses, therefore the least significant bit of the PC is always 0. At reset, the PC is initialized to 0 or an optional predetermined value. When a warm reset occurs, value of the PC prior to reset is saved in the (R1,R0) general-purpose register pair.

5.2.2 Interrupt Stack Pointer (ISP)

The 32-bit ISP register points to the top of the interrupt stack. This stack is used by hardware to service exceptions (interrupts and traps). The stack pointer may be accessed as the ISP register for initialization. The interrupt stack can be located anywhere in the CPU address space. The ISP cannot be used for any purpose other than the interrupt stack, which is used for automatic storage of the CPU registers when an exception occurs and restoration of these registers when the exception handler returns. The interrupt stack grows downward in memory. The least significant bit and the 8 most significant bits of the ISP register are always 0.

5.2.3 User Stack Pointer (USP)

The USP register points to the top of the user-mode program stack. Separate stacks are available for user and supervisor modes, to support protection mechanisms for multitasking software. The processor mode is controlled by the U bit in the PSR register (which is called PSR.U in the shorthand convention). Stack grow downward in memory. If the USP register points to an illegal address (any address greater than 0x00FF_FFFF) and the USP is used for stack access, an IAD trap is taken.

obsolete

5.2.4 Interrupt Base Register (INTBASE)

The INTBASE register holds the address of the dispatch table for exceptions. The dispatch table can be located anywhere in the CPU address space. When loading the INTBASE register, bits 31 to 24 and bit 0 must written with 0.

5.3 PROCESSOR STATUS REGISTER (PSR)

The PSR provides state information and controls operating modes for the CPU. The format of the PSR is shown below.

15 12	11	10	9	8	7	6	5	4	3	2	1	0
Reserved	I	P	E	0	N	Z	F	0	U	L	T	C

C — The Carry bit indicates whether a carry or borrow occurred after addition or subtraction.
0 – No carry or borrow occurred.
1 – Carry or borrow occurred.

T — The Trace bit enables execution tracing, in which a Trace trap (TRC) is taken after every instruction. Tracing is automatically disabled during the execution of an exception handler.
0 – Tracing disabled.
1 – Tracing enabled.

L — The Low bit indicates the result of the last comparison operation, with the operands interpreted as unsigned integers.
0 – Second operand greater than or equal to first operand.
1 – Second operand less than first operand.

U — The User Mode bit controls whether the CPU is in user or supervisor mode. In supervisor mode, the SP register is used for stack operations. In user mode, the USP register is used instead. User mode is entered by executing the Jump USR instruction. When an exception is taken, the exception handler automatically begins execution in supervisor mode. The USP register is accessible using the Load Processor Register (LPR/LPRD) instruction in supervisor mode. In user mode, an attempt to access the USP register generates a UND trap.
0 – CPU is executing in supervisor mode.
1 – CPU is executing in user mode.

F — The Flag bit is a general condition flag for signalling exception conditions or distinguishing the results of an instruction, among other thing uses. For example, integer arithmetic instructions use the F bit to indicate an overflow condition after an addition or subtraction operation.

Z — The Zero bit is used by comparison operations. In a comparison of integers, the Z bit is set if the two operands are equal. If the operands are unequal, the Z bit is cleared.
0 – Source and destination operands unequal.
1 – Source and destination operands equal.

N — The Negative bit indicates the result of the last comparison operation, with the operands interpreted as signed integers.
0 – Second operand greater than or equal to first operand.
1 – Second operand less than first operand.

E — The Local Maskable Interrupt Enable bit enables or disables maskable interrupts. If this bit and the Global Maskable Interrupt Enable (I) bit are both set, all interrupts are enabled. If either of these bits is clear, only the non-maskable interrupt is enabled. The E bit is set by the Enable Interrupts (EI) instruction and cleared by the Disable Interrupts (DI) instruction.
0 – Maskable interrupts disabled.
1 – Maskable interrupts enabled.

P — The Trace Trap Pending bit is used together with the Trace (T) bit to prevent a Trace (TRC) trap from occurring more than once for one instruction. At the beginning of the execution of an instruction, the state of the T bit is copied into the P bit. If the P bit remains set at the end of the instruction execution, the TRC trap is taken.
0 – No trace trap pending.
1 – Trace trap pending.

I — The Global Maskable Interrupt Enable bit is used to enable or disable maskable interrupts. If this bit and the Local Maskable Interrupt Enable (E) bit are both set, all maskable interrupts are taken. If either bit is clear, only the non-maskable interrupt is taken. Unlike the E bit, the I bit is automatically cleared when an interrupt occurs and automatically set upon completion of an interrupt handler.
0 – Maskable interrupts disabled.
1 – Maskable interrupts enabled.

Bits Z, C, L, N, and F of the PSR are referenced from assembly language by the condition code in conditional branch instructions. A conditional branch instruction may cause a branch in program execution, based on the value of one or more of these PSR bits. For example, one of the Bcond instructions, BEQ (Branch EQual), causes a branch if the PSR.Z bit is set.

On reset, bits 0 through 11 of the PSR are cleared, except for the PSR.E bit, which is set. On warm reset, the values of each bit before reset are copied into the R2 general-purpose register. Bits 4 and 8 of the PSR have a constant value of 0. Bits 12 through 15 are reserved. In general, status bits are modified only by specific instructions. Otherwise, status bits maintain their values throughout instructions which do not implicitly affect them.

Obsolete

5.4 CONFIGURATION REGISTER (CFG)

The CFG register is used to enable or disable various operating modes and to control optional on-chip caches. Because the CP3BT10 does not have cache memory, the cache control bits in the CFG register are reserved. All CFG bits are cleared on reset.

15 10	9	8	7	6	5 2	1	0
Reserved	SR	ED	0	0	Reserved	0	0

ED — The Extended Dispatch bit selects whether the size of an entry in the interrupt dispatch table (IDT) is 16 or 32 bits. Each entry holds the address of the appropriate exception handler. When the IDT has 16-bit entries, and all exception handlers must reside in the first 128K of the address space. The location of the IDT is held in the INTBASE register, which is not affected by the state of the ED bit.
0 – Interrupt dispatch table has 16-bit entries.
1 – Interrupt dispatch table has 32-bit entries.

SR — The Short Register bit enables a compatibility mode for the CR16B large model. In the CR16C core, registers R12, R13, and RA are extended to 32 bits. In the CR16B large model, only the lower 16 bits of these registers are used, and these “short registers” are paired together for 32-bit operations. In this mode, the (RA, R13) register pair is used as the extended RA register, and address displacements relative to a single register are supported with offsets of 0 and 14 bits in place of the index addressing with these displacements.
0 – 32-bit registers are used.
1 – 16-bit registers are used (CR16B mode).

Obsolete

5.5 ADDRESSING MODES

The CR16C CPU core implements a load/store architecture, in which arithmetic and logical instructions operate on register operands. Memory operands are made accessible in registers using load and store instructions. For efficient implementation of I/O-intensive embedded applications, the architecture also provides a set of bit operations that operate on memory operands.

The load and store instructions support these addressing modes: register/pair, immediate, relative, absolute, and index addressing. When register pairs are used, the lower bits are in the lower index register and the upper bits are in the higher index register. When the CFG.SR bit is clear, the 32-bit registers R12, R13, RA, and SP are also treated as register pairs.

References to register pairs in assembly language use parentheses. With a register pair, the lower numbered register pair must be on the right. For example,

jump (r5, r4)

load $4(r4,r3), (r6,r5)

load $5(r12), (r13)

The instruction set supports the following addressing modes:

Register/Pair Mode In register/pair mode, the operand is held in a general-purpose register, or in a general-purpose register pair. For example, the following instruction adds the contents of the low byte of register r1 to the contents of the low byte of r2, and places the result in the low byte register r2. The high byte of register r2 is not modified.

ADDB R1, R2

Immediate Mode In immediate mode, the operand is a constant value which is encoded in the instruction. For example, the following instruction multiplies the value of r4 by 4 and places the result in r4.

MULW $4, R4

Relative Mode In relative mode, the operand is addressed using a relative value (displacement) encoded in the instruction. This displacement is relative to the current Program Counter (PC), a general-purpose register, or a register pair.

In branch instructions, the displacement is always relative to the current value of the PC Register. For example, the following instruction causes an unconditional branch to an address 10 ahead of the current PC.

BR *+10

In another example, the operand resides in memory. Its address is obtained by adding a displacement encoded in the instruction to the contents of register r5. The address calculation does not modify the contents of register r5.

LOADW 12(R5), R6

The following example calculates the address of a source operand by adding a displacement of 4 to the contents of a register pair (r5, r4) and loads this operand into the register pair (r7, r6). r7 receives the high word of the operand, and r6 receives the low word.

LOADD 4(r5, r4), (r7, r6)

Index Mode In index mode, the operand address is calculated with a base address held in either R12 or R13. The CFG.SR bit must be clear to use this mode.

- For relative mode operands, the memory address is calculated by adding the value of a register pair and a displacement to the base address. The displacement can be a 14 or 20-bit unsigned value, which is encoded in the instruction.
- For absolute mode operands, the memory address is calculated by adding a 20-bit absolute address encoded in the instruction to the base address.

In the following example, the operand address is the sum of the displacement 4, the contents of the register pair (r5,r4), and the base address held in register r12. The word at this address is loaded into register r6.

LOADW [r12]4(r5, r4), r6

Absolute Mode In absolute mode, the operand is located in memory, and its address is encoded in the instruction (normally 20 or 24 bits). For example, the following instruction loads the byte at address 4000 into the lower 8 bits of register r6.

LOADB 4000, r6

For additional information on the addressing modes, see the CompactRISC CR16C Programmer's Reference Manual.

Obsolete

5.6 STACKS

A stack is a last-in, first-out data structure for dynamic storage of data and addresses. A stack consists of a block of memory used to hold the data and a pointer to the top of the stack. As more data is pushed onto a stack, the stack grows downward in memory. The CR16C supports two types of stacks: the interrupt stack and program stacks.

5.6.1 Interrupt Stack

The processor uses the interrupt stack to save and restore the program state during the exception handling. Hardware automatically pushes this data onto the interrupt stack before entering an exception handler. When the exception handler returns, hardware restores the processor state with data popped from the interrupt stack. The interrupt stack pointer is held in the ISP register.

5.6.2 Program Stack

The program stack is normally used by software to save and restore register values on subroutine entry and exit, hold local and temporary variables, and hold parameters passed between the calling routine and the subroutine. The only hardware mechanisms which operate on the program stack are the PUSH, POP, and POPRET instructions.

5.6.3 User and Supervisor Stack Pointers

To support multitasking operating systems, support is provided for two program stack pointers: a user stack pointer and a supervisor stack pointer. When the PSR.U bit is clear, the SP register is used for all program stack operations. This is the default mode when the user/supervisor protection mechanism is not used, and it is the supervisor mode when protection is used.

When the PSR.U bit is set, the processor is in user mode, and the USP register is used as the program stack pointer. User mode can only be entered using the JUSR instruction, which performs a jump and sets the PSR.U bit. User mode is exited when an exception is taken and re-entered when the exception handler returns. In user mode, the LPRD instruction cannot be used to change the state of processor registers (such as the PSR).

5.7 INSTRUCTION SET

Table 6 lists the operand specifiers for the instruction set, and Table 7 is a summary of all instructions. For each instruction, the table shows the mnemonic and a brief description of the operation performed.

In the mnemonic column, the lower-case letter “i” is used to indicate the type of integer that the instruction operates on, either “B” for byte or “W” for word. For example, the notation ADDi for the “add” instruction means that there are two forms of this instruction, ADDB and ADDW, which operate on bytes and words, respectively.

Similarly, the lower-case string “cond” is used to indicate the type of condition tested by the instruction. For example, the notation Jcond represents a class of conditional jump instructions: JEQ for Jump on Equal, JNE for Jump on Not Equal, etc. For detailed information on all instructions, see the *CompactRISC CR16C Programmer's Reference Manual*.

Table 6 Key to Operand Specifiers

Operand Specifier	Description
abs	Absolute address
disp	Displacement (numeric suffix indicates number of bits)
imm	Immediate operand (numeric suffix indicates number of bits)
Iposition	Bit position in memory
Rbase	Base register (relative mode)
Rdest	Destination register
Rindex	Index register
RPbase, RPbasex	Base register pair (relative mode)
RPdest	Destination register pair
RPlink	Link register pair
Rposition	Bit position in register
Rproc	16-bit processor register
Rprocd	32-bit processor register
RPsrc	Source register pair
RPtarget	Target register pair
Rsrc, Rsrc1, Rsrc2	Source register

Obsolete

Table 7 Instruction Set Summary

Mnemonic	Operands	Description
MOVi	Rsrc/imm, Rdest	Move
MOVXB	Rsrc, Rdest	Move with sign extension
MOVZB	Rsrc, Rdest	Move with zero extension
MOVXW	Rsrc, RPdest	Move with sign extension
MOVZW	Rsrc, RPdest	Move with zero extension
MOVD	imm, RPdest	Move immediate to register-pair
	RPsrc, RPdest	Move between register-pairs
ADD[U]i	Rsrc/imm, Rdest	Add
ADDCi	Rsrc/imm, Rdest	Add with carry
ADDD	RPsrc/imm, RPdest	Add with RP or immediate.
MACQWa	Rsrc1, Rsrc2, RPdest	Multiply signed Q15: RPdest := RPdest + (Rsrc1 × Rsrc2)
MACSWa	Rsrc1, Rsrc2, RPdest	Multiply signed and add result: RPdest := RPdest + (Rsrc1 × Rsrc2)
MACUWa	Rsrc1, Rsrc2, RPdest	Multiply unsigned and add result: RPdest := RPdest + (Rsrc1 × Rsrc2)
MULi	Rsrc/imm, Rdest	Multiply: Rdest(8) := Rdest(8) × Rsrc(8)/imm Rdest(16) := Rdest(16) × Rsrc(16)/imm
MULSB	Rsrc, Rdest	Multiply: Rdest(16) := Rdest(8) × Rsrc(8)
MULSW	Rsrc, RPdest	Multiply: RPdest := RPdest(16) × Rsrc(16)
MULUW	Rsrc, RPdest	Multiply: RPdest := RPdest(16) × Rsrc(16);
SUBi	Rsrc/imm, Rdest	Subtract: (Rdest := Rdest - Rsrc/imm)
SUBD	RPsrc/imm, RPdest	Subtract: (RPdest := RPdest - RPsrc/imm)
SUBCi	Rsrc/imm, Rdest	Subtract with carry: (Rdest := Rdest - Rsrc/imm)
CMPi	Rsrc/imm, Rdest	Compare Rdest - Rsrc/imm
CMPD	RPsrc/imm, RPdest	Compare RPdest - RPsrc/imm
BEQ0i	Rsrc, disp	Compare Rsrc to 0 and branch if EQUAL
BNE0i	Rsrc, disp	Compare Rsrc to 0 and branch if NOT EQUAL
ANDi	Rsrc/imm, Rdest	Logical AND: Rdest := Rdest & Rsrc/imm
ANDD	RPsrc/imm, RPdest	Logical AND: RPdest := RPsrc & RPsrc/imm
ORi	Rsrc/imm, Rdest	Logical OR: Rdest := Rdest | Rsrc/imm
ORD	RPsrc/imm, RPdest	Logical OR: Rdest := RPdest | RPsrc/imm
Scond	Rdest	Save condition code as boolean
XORi	Rsrc/imm, Rdest	Logical exclusive OR: Rdest := Rdest ^ Rsrc/imm
XORD	RPsrc/imm, RPdest	Logical exclusive OR: Rdest := RPdest ^ RPsrc/imm
ASHUi	Rsrc/imm, Rdest	Arithmetic left/right shift

Obsolete

Table 7 Instruction Set Summary

Mnemonic	Operands	Description
ASHUD	Rsrc/imm, RPdest	Arithmetic left/right shift
LSHi	Rsrc/imm, Rdest	Logical left/right shift
LSHD	Rsrc/imm, RPdest	Logical left/right shift
SBITi	Iposition, disp(Rbase)	Set a bit in memory (Because this instruction treats the destination as a read-modify-write operand, it not be used to set bits in write-only registers.)
	Iposition, disp(RPbase)	
	Iposition, (Rindex)disp(RPbasex)	
	Iposition, abs	
	Iposition, (Rindex)abs	
CBITi	Iposition, disp(Rbase)	Clear a bit in memory
	Iposition, disp(RPbase)	
	Iposition, (Rindex)disp(RPbasex)	
	Iposition, abs	
	Iposition, (Rindex)abs	
TBIT TBITi	Rposition/imm, Rsrc	Test a bit in a register Test a bit in memory
	Iposition, disp(Rbase)	
	Iposition, disp(RPbase)	
	Iposition, (Rindex)disp(RPbasex)	
	Iposition, abs	
	Iposition, (Rindex)abs	
LPR	Rsrc, Rproc	Load processor register
LPRD	RPsrc, Rprocd	Load double processor register
SPR	Rproc, Rdest	Store processor register
SPRD	Rprocd, RPdest	Store 32-bit processor register
Bcond	disp9	Conditional branch
	disp17	
	disp24	
BAL	RPlink, disp24	Branch and link
BR	disp9	Branch
	disp17	
	disp24	
EXCP	vector	Trap (vector)
Jcond	RPtarget	Conditional Jump to a large address
JAL	RA, RPtarget,	Jump and link to a large address
	RPlink, RPtarget	
JUMP	RPtarget	Jump
JUSR	RPtarget	Jump and set PSR.U

Obsolete

Table 7 Instruction Set Summary

Mnemonic	Operands	Description
RETX		Return from exception
PUSH	imm, Rsrc, RA	Push “imm” number of registers on user stack, starting with Rsrc and possibly including RA
POP	imm, Rdest, RA	Restore “imm” number of registers from user stack, starting with Rdest and possibly including RA
POPRET	imm, Rdest, RA	Restore registers (similar to POP) and JUMP RA
LOADi	disp(Rbase), Rdest	Load (register relative)
	abs, Rdest	Load (absolute)
	(Rindex)abs, Rdest	Load (absolute index relative)
	(Rindex)disp(RPbasex), Rdest	Load (register relative index)
	disp(RPbase), Rdest	Load (register pair relative)
LOADD	disp(Rbase), Rdest	Load (register relative)
	abs, Rdest	Load (absolute)
	(Rindex)abs, Rdest	Load (absolute index relative)
	(Rindex)disp(RPbasex), Rdest	Load (register pair relative index)
	disp(RPbase), Rdest	Load (register pair relative)
STORi	Rsrc, disp(Rbase)	Store (register relative)
	Rsrc, disp(RPbase)	Store (register pair relative)
	Rsrc, abs	Store (absolute)
	Rsrc, (Rindex)disp(RPbasex)	Store (register pair relative index)
	Rsrc, (Rindex)abs	Store (absolute index)
STORD	RPsrc, disp(Rbase)	Store (register relative)
	RPsrc, disp(RPbase)	Store (register pair relative)
	RPsrc, abs	Store (absolute)
	RPsrc, (Rindex)disp(RPbasex)	Store (register pair index relative)
	RPsrc, (Rindex)abs	Store (absolute index relative)
STOR IMM	imm4, disp(Rbase)	Store unsigned 4-bit immediate value extended to operand length in memory
	imm4, disp(RPbase)	
	imm4, (Rindex)disp(RPbasex)	
	imm4, abs	
	imm4, (Rindex)abs	
LOADM	imm3	Load 1 to 8 registers (R2-R5, R8-R11) from memory starting at (R0)
LOADMP	imm3	Load 1 to 8 registers (R2-R5, R8-R11) from memory starting at (R1, R0)
STORM	STORM imm3	Store 1 to 8 registers (R2-R5, R8-R11) to memory starting at (R2)

Obsolete

Table 7 Instruction Set Summary

Mnemonic	Operands	Description
STORMP	imm3	Store 1 to 8 registers (R2-R5, R8-R11) to memory starting at (R7,R6)
DI		Disable maskable interrupts
EI		Enable maskable interrupts
EIWAIT		Enable maskable interrupts and wait for interrupt
NOP		No operation
WAIT		Wait for interrupt

Obsolete

6.0 Memory

The CP3BT10 supports a uniform 16M-byte linear address space. Table 8 lists the types of memory and peripherals that occupy this memory space. Unlisted address ranges are reserved and must not be read or written. The BIU zones are regions of the address space that share the same control bits in the Bus Interface Unit (BIU).

Table 8 CP3BT10 Memory Map

Start Address	End Address	Size in Bytes	Description	BIU Zone
00 0000h	03 FFFFh	256K	On-chip Flash Program Memory, including Boot Memory	Static Zone 0 (mapped internally in IRE and ERE mode; mapped to the external bus in DEV mode)
04 0000h	0D FFFFh	640K	Reserved	
0E 0000h	0E 1FFFh	8K	On-chip Flash Data Memory	
0E 2000h	0E 7FFFh	24K	Reserved	
0E 8000h	0E 91FFh	4.5K	Bluetooth Data RAM	N/A
0E 9200h	0E BFFFh	11.5K	Reserved	
0E C000h	0E E7FFh	10K	System RAM	
0E E800h	0E EBFFh	1K	Bluetooth Lower Link Controller Sequencer RAM	
0E EC00h	0E EFFFh	1K	Reserved	
0E F000h	0E F0FFh	320	Reserved	
0E F140h	0E F17Fh	64	Reserved	
0E F180h	0E F1FFh	128	Bluetooth Lower Link Controller Registers	
0E F200h	0F FFFFh	67.5K	Reserved	
10 0000h	3F FFFFh	3072K	Reserved	
40 0000h	7F FFFFh	4096K	External Memory Zone 1	Static Zone 1
80 0000h	FE FFFFh	8128K	External Memory Zone 2	Static Zone 2
FF 0000h	FF FAFFh	64256	BIU Peripherals	
FF FB00h	FF FBFFh	256	I/O Expansion	I/O Zone
FF FC00h	FF FFFFh	1K	Peripherals and Other I/O Ports	N/A

6.1 OPERATING ENVIRONMENT

The operating environment controls whether external memory is supported and whether the reset vector jumps to a code space intended to support In-System Programming (ISP). Up to 12M of external memory space is available.

The operating mode of the device is controlled by the states on the ENV[2:0] pins at reset and the states of the EMPTY bits in the Protection Word, as shown in Table 9. Internal pullups on the ENV[2:0] pins select IRE mode or ISP mode if these pins are allowed to float.

When ENV[2:0] = 111b, IRE mode is selected unless the EMPTY bits in the Protection word indicate that the program flash memory is empty (unprogrammed), in which case ISP mode is selected. When ENV[2:0] = 011b, ERE mode is selected unless the EMPTY bits indicate that the program flash memory is empty, in which case ISP mode is selected. When ENV[2:0] = 110b, ISP mode is selected without regard to the states of the EMPTY bits. See Section 8.4.2 for more details.

In the DEV environment, the on-chip flash memory is disabled, and the corresponding region of the address space is mapped to external memory.

Table 9 Operating Environment Selection

ENV[2:0]	EMPTY	Operating Environment
111	No	Internal ROM enabled (IRE) mode
011	No	External ROM enabled (ERE) mode
000	N/A	Development (DEV) mode
110	N/A	In-System-Programming (ISP) mode
111	Yes	In-System-Programming (ISP) mode
011	Yes	In-System-Programming (ISP) mode

Obsolete

6.2 BUS INTERFACE UNIT (BIU)

The BIU controls the interface between the CPU core bus and those on-chip modules which are mapped into BIU zones. These on-chip modules are the flash program memory and the I/O zone. The BIU controls the configured parameters for bus access (such as the number of wait states for memory access) and issues the appropriate bus signals for the requested access.

6.3 BUS CYCLES

There are four types of data transfer bus cycles:

- Normal read
- Fast read
- Early write
- Late write

The type of data cycle used in a particular transaction depends on the type of CPU operation (a write or a read), the type of memory or I/O being accessed, and the access type programmed into the BIU control registers (early/late write or normal/fast read).

For read operations, a basic normal read takes two clock cycles, and a fast-read bus cycle takes one clock cycle. Normal read bus cycles are enabled by default after reset.

For write operations, a basic late-write bus cycle takes two clock cycles, and a basic early-write bus cycle takes three clock cycles. Early-write bus cycles are enabled by default after reset. However, late-write bus cycles are needed for ordinary write operations, so this configuration must be changed by software (see Section 6.4.1).

In certain cases, one or more additional clock cycles are added to a bus access cycle. There are two types of additional clock cycles for ordinary memory accesses, called internal wait cycles (TIW) and hold (T_{hold}) cycles.

A wait cycle is inserted in a bus cycle just after the memory address has been placed on the address bus. This gives the accessed memory more time to respond to the transaction request.

A hold cycle is inserted at the end of a bus cycle. This holds the data on the data bus for an extended number of clock cycles.

6.4 BIU CONTROL REGISTERS

The BIU has a set of control registers that determine how many wait cycles and hold cycles are to be used for accessing memory. During initialization of the system, these registers should be programmed with appropriate values so that the minimum allowable number of cycles is used. This number varies with the clock frequency.

There are five BIU control registers, as listed in Table 10. These registers control the bus cycle configuration used for accessing the various on-chip memory types.

Table 10 Bus Control Registers

Name	Address	Description
BCFG	FF F900h	BIU Configuration Register
IOCFG	FF F902h	I/O Zone Configuration Register
SZCFG0	FF F904h	Static Zone 0 Configuration Register
SZCFG1	FF F906h	Static Zone 1 Configuration Register
SZCFG2	FF F908h	Static Zone 2 Configuration Register

6.4.1 BIU Configuration Register (BCFG)

The BCFG register is a byte-wide, read/write register that selects early-write or late-write bus cycles. At reset, the register is initialized to 07h. The register format is shown below.

7 … 3	2	1	0
Reserved	1	1	EWR

EWR The Early Write bit controls write cycle timing.
0 – Late-write operation (2 clock cycles to write).
1 – Early-write operation.

At reset, the BCFG register is initialized to 07h, which selects early-write operation. However, late-write operation is required for normal device operation, so software must change the register value to 06h. Bits 1 and 2 of this register must always be set when writing to this register.

Obsolete

6.4.2 I/O Zone Configuration Register (IOCFG)

The IOCFG register is a word-wide, read/write register that controls the timing and bus characteristics of accesses to the 256-byte I/O Zone memory space (FF FB00h to FF FBFFh). The registers associated with Port B and Port C reside in the I/O memory array. At reset, the register is initialized to 069Fh. The register format is shown below.

7	6	5	4	3	2	0
BW	Reserved		HOLD		WAIT	

15	10	9	8
Reserved		IPST	Res.

WAIT — The Memory Wait Cycles field specifies the number of TIW (internal wait state) clock cycles added for each memory access, ranging from 000 binary for no additional TIW wait cycles to 111 binary for seven additional TIW wait cycles.

HOLD — The Memory Hold Cycles field specifies the number of T_{hold} clock cycles used for each memory access, ranging from 00b for no T_{hold} cycles to 11b for three T_{hold} clock cycles.

BW — The Bus Width bit defines the bus width of the IO Zone.
0 – 8-bit bus width.
1 – 16-bit bus width (default)

IPST — The Post Idle bit controls whether an idle cycle follows the current bus cycle, when the next bus cycle accesses a different zone. No idle cycles are required for on-chip accesses.
0 – No idle cycle (recommended).
1 – Idle cycle.

6.4.3 Static Zone 0 Configuration Register (SZCFG0)

The SZCFG0 register is a word-wide, read/write register that controls the timing and bus characteristics of Zone 0 memory accesses. Zone 0 is used for the on-chip flash memory (including the boot area, program memory, and data memory).

At reset, the register is initialized to 069Fh. The register format is shown below.

7	6	5	4	3	2	0
BW	WBR	RBE	HOLD		WAIT	

15	12	11	10	9	8
Reserved		FRE	IPRE	IPST	Res.

WAIT — The Memory Wait field specifies the number of TIW (internal wait state) clock cycles added for each memory access, ranging from 000b for no additional TIW wait cycles to 111b for seven additional TIW wait cycles. These bits are ignored if the SZCFG0.FRE bit is set.

HOLD — The Memory Hold field specifies the number of T_{hold} clock cycles used for each memory access, ranging from 00b for no T_{hold} cycles to 11b for three T_{hold} clock cycles. These bits are ignored if the SZCFG0.FRE bit is set.

RBE — The Read Burst Enable enables burst cycles on 16-bit reads from 8-bit bus width regions of the address space. Because the flash program memory is required to be 16-bit bus width, the RBE bit is a don't care bit. This bit is ignored when the SZCFG0.FRE bit is set.
0 – Burst read disabled.
1 – Burst read enabled.

WBR — The Wait on Burst Read bit controls if a wait state is added on burst read transaction. This bit is ignored, when SZCFG0.FRE bit is set or when SZCFG0.RBE is clear.
0 – No TBW on burst read cycles.
1 – One TBW on burst read cycles.

BW — The Bus Width bit controls the bus width of the zone. The flash program memory must be configured for 16-bit bus width.
0 – 8-bit bus width.
1 – 16-bit bus width (required).

FRE — The Fast Read Enable bit controls whether fast read bus cycles are used. A fast read operation takes one clock cycle. A normal read operation takes at least two clock cycles.
0 – Normal read cycles.
1 – Fast read cycles.

IPST — The Post Idle bit controls whether an idle cycle follows the current bus cycle, when the next bus cycle accesses a different zone. No idle cycles are required for on-chip accesses.
0 – No idle cycle (recommended).
1 – Idle cycle inserted.

Obsolete

IPRE — The Preliminary Idle bit controls whether an idle cycle is inserted prior to the current bus cycle, when the new bus cycle accesses a different zone. No idle cycles are required for on-chip accesses.
0 — No idle cycle (recommended).
1 — Idle cycle inserted.

6.4.4 Static Zone 1 Configuration Register (SZCFG1)

The SZCFG1 register is a word-wide, read/write register that controls the timing and bus characteristics for off-chip accesses selected with the $\overline{SEL1}$ output signal.

At reset, the register is initialized to 069Fh. The register format is shown below.

7	6	5	4	3	2	0
BW	WBR	RBE	HOLD		WAIT	

15	12	11	10	9	8
Reserved		FRE	IPRE	IPST	Res.

WAIT — The Memory Wait field specifies the number of TIW (internal wait state) clock cycles added for each memory access, ranging from 000b for no additional TIW wait cycles to 111b for seven additional TIW wait cycles. These bits are ignored if the SZCFG1.FRE bit is set.

HOLD — The Memory Hold field specifies the number of T_{hold} clock cycles used for each memory access, ranging from 00b for no T_{hold} cycles to 11b for three T_{hold} clock cycles. These bits are ignored if the SZCFG1.FRE bit is set.

RBE — The Read Burst Enable enables burst cycles on 16-bit reads from 8-bit bus width regions of the address space. This bit is ignored when the SZCFG1.FRE bit is set or the SZCFG1.BW is clear.
0 — Burst read disabled.
1 — Burst read enabled.

WBR — The Wait on Burst Read bit controls if a wait state is added on burst read transaction. This bit is ignored, when SZCFG1.FRE bit is set or when SZCFG1.RBE is clear.
0 — No TBW on burst read cycles.
1 — One TBW on burst read cycles.

BW — The Bus Width bit controls the bus width of the zone.
0 — 8-bit bus width.
1 — 16-bit bus width.

FRE — The Fast Read Enable bit controls whether fast read bus cycles are used. A fast read operation takes one clock cycle. A normal read operation takes at least two clock cycles.
0 — Normal read cycles.
1 — Fast read cycles.

IPST — The Post Idle bit controls whether an idle cycle follows the current bus cycle, when the next bus cycle accesses a different zone.
0 — No idle cycle.
1 — Idle cycle inserted.

IPRE — The Preliminary Idle bit controls whether an idle cycle is inserted prior to the current bus cycle, when the new bus cycle accesses a different zone.
0 — No idle cycle.
1 — Idle cycle inserted.

Obsolete

6.4.5 Static Zone 2 Configuration Register (SZCFG2)

The SZCFG2 register is a word-wide, read/write register that controls the timing and bus characteristics for off-chip accesses selected with the $\overline{SEL2}$ output signal.

At reset, the register is initialized to 069Fh. The register format is shown below.

7	6	5	4	3	2	0
BW	WBR	RBE	HOLD		WAIT	

15	12	11	10	9	8
Reserved		FRE	IPRE	IPST	Res.

WAIT — The Memory Wait field specifies the number of TIW (internal wait state) clock cycles added for each memory access, ranging from 000b for no additional TIW wait cycles to 111b for seven additional TIW wait cycles. These bits are ignored if the SZCFG2.FRE bit is set.

HOLD — The Memory Hold field specifies the number of T_{hold} clock cycles used for each memory access, ranging from 00b for no T_{hold} cycles to 11b for three T_{hold} clock cycles. These bits are ignored if the SZCFG2.FRE bit is set.

RBE — The Read Burst Enable enables burst cycles on 16-bit reads from 8-bit bus width regions of the address space. This bit is ignored when the SZCFG2.FRE bit is set or the SZCFG2.BW is clear.
0 – Burst read disabled.
1 – Burst read enabled.

WBR — The Wait on Burst Read bit controls if a wait state is added on burst read transaction. This bit is ignored, when SZCFG2.FRE bit is set or when SZCFG2.RBE is clear.
0 – No TBW on burst read cycles.
1 – One TBW on burst read cycles.

BW — The Bus Width bit controls the bus width of the zone.
0 – 8-bit bus width.
1 – 16-bit bus width.

FRE — The Fast Read Enable bit controls whether fast read bus cycles are used. A fast read operation takes one clock cycle. A normal read operation takes at least two clock cycles.
0 – Normal read cycles.
1 – Fast read cycles.

IPST — The Post Idle bit controls whether an idle cycle follows the current bus cycle, when the next bus cycle accesses a different zone.
0 – No idle cycle.
1 – Idle cycle inserted.

IPRE — The Preliminary Idle bit controls whether an idle cycle is inserted prior to the current bus cycle, when the new bus cycle accesses a different zone.
0 – No idle cycle.
1 – Idle cycle inserted.

6.5 WAIT AND HOLD STATES

The number of wait cycles and hold cycles inserted into a bus cycle depends on whether it is a read or write operation, the type of memory or I/O being accessed, and the control register settings.

6.5.1 Flash Program/Data Memory

When the CPU accesses the Flash program and data memory (address ranges 000000h–03FFFFh and 0E0000h–0E1FFFh), the number of added wait and hold cycles depends on the type of access and the BIU register settings.

In fast-read mode (SZCFG0.FRE=1), a read operation is a single cycle access. This limits the maximum CPU operating frequency to 24 MHz.

For a read operation in normal-read mode (SZCFG0.FRE=0), the number of inserted wait cycles is specified in the SZCFG0.WAIT field. The total number of wait cycles is the value in the WAIT field plus 1, so it can range from 1 to 8. The number of inserted hold cycles is specified in the SCCFG0.HOLD field, which can range from 0 to 3.

For a write operation in fast read mode (SZCFG0.FRE=1), the number of inserted wait cycles is 1. No hold cycles are used.

For a write operation normal read mode (SZCFG0.FRE=0), the number of wait cycles is equal to the value written to the SZCFG0.WAIT field plus 1 (in the late write mode) or 2 (in the early write mode). The number of inserted hold cycles is equal to the value written to the SCCFG0.HOLD field, which can range from 0 to 3.

6.5.2 RAM Memory

Read and write accesses to on-chip RAM is performed within a single cycle, without regard to the BIU settings. The RAM address is in the range of 0E 8000h–0E 91FFh and 0E C000h–0E EBFFh.

6.5.3 Access to Peripherals

When the CPU accesses on-chip peripherals in the range of 0E F000h–0E F1FFh and FF 0000h–FF FBFFh, one wait cycle and one preliminary idle cycle is used. No hold cycles are used. The IOCFG register determines the access timing for the address range FF FB00h–FF FBFFh.

Obsolete

7.0 System Configuration Registers

The system configuration registers control and provide status for certain aspects of device setup and operation, such as indicating the states sampled from the ENV[2:0] inputs. The system configuration registers are listed in Table 11.

Table 11 System Configuration Registers

Name	Address	Description
MCFG	FF F910h	Module Configuration Register
MSTAT	FF F914h	Module Status Register

7.1 MODULE CONFIGURATION REGISTER (MCFG)

The MCFG register is a byte-wide, read/write register that selects the clock output features of the device.

The register must be written in active mode only, not in power save, HALT, or IDLE mode. However, the register contents are preserved during all power modes.

The MCFG register format is shown below.

7	6	5	4	3	2	1	0
Res.	MEM_IO _SPEED	MISC_IO _SPEED	USB _ENABLE	SCLK OE	MCLK OE	PLLCLK OE	EXI OE

EXIOE — The EXIOE bit controls whether the external bus is enabled in the IRE environment for implementing the I/O Zone (FF FB00h–FF FBFFh).
0 – External bus disabled.
1 – External bus enabled.

PLLCLKOE — The PLLCLKOE bit controls whether the PLL clock is driven on the ENV0/PLLCLK pin.
0 – ENV0/PLLCLK pin is high impedance.
1 – PLL clock driven on ENV0/PLLCLK.

MCLKOE — The MCLKOE bit controls whether the Main Clock is driven on the ENV1/CPUCLK pin.
0 – ENV1/CPUCLK pin is high impedance.
1 – Main Clock is driven on ENV1/CPUCLK.

SCLKOE — The SCLKOE bit controls whether the Slow Clock is driven on the ENV2/SLOWCLK pin.
0 – ENV2/SLOWCLK pin is high impedance.
1 – Slow Clock driven on ENV2/SLOWCLK.

USB_ENABLE — The USB_ENABLE bit can be used to force an external USB transceiver into its low-power mode. The power mode is dependent on the USB controller status, the USB_ENABLE bit in the Function Word (see Section 8.4.1), and the USB_ENABLE bit in the MCFG register.
0 – External USB transceiver forced into low-power mode.
1 – Transceiver power mode dependent on USB controller status and programming of the Function Word. (This is the state of the USB_ENABLE bit after reset.)

MISC_IO_SPEED — The MISC_IO_SPEED bit controls the slew rate of the output drivers for the ENV[2:0], $\overline{\text{RDY}}$, RFDATA, and TDO pins. To minimize noise, the slow slew rate is recommended.
0 – Fast slew rate.
1 – Slow slew rate.

MEM_IO_SPEED — The MEM_IO_SPEED bit controls the slew rate of the output drivers for the A[21:0], $\overline{\text{RD}}$, $\overline{\text{SEL[2:1]}}$, and $\overline{\text{WR[1:0]}}$ pins. Memory speeds for the CP3BT10 are characterized with fast slew rate. Slow slew rate reduces the available memory access time by 5 ns.
0 – Fast slew rate.
1 – Slow slew rate.

7.2 MODULE STATUS REGISTER (MSTAT)

The MSTAT register is a byte-wide, read-only register that indicates the general status of the device. The MSTAT register format is shown below.

7 5	4	3	2	1	0
Reserved	DPGMBUSY	PGMBUSY	OENV2	OENV1	OENV0

OENV[2:0] — The Operating Environment bits hold the states sampled from the ENV[2:0] input pins at reset. These states are controlled by external hardware at reset and are held constant in the register until the next reset.

PGMBUSY — The Flash Programming Busy bit is automatically set when either the program memory or the data memory is being programmed or erased. It is clear when neither of the memories is busy. When this bit is set, software must not attempt to program or erase either of these two memories. This bit is a copy of the FMBUSY bit in the FMSTAT register.
0 – Flash memory is not busy.
1 – Flash memory is busy.

DPGMBUSY — The Data Flash Programming Busy indicates that the flash data memory is being erased or a pipelined programming sequence is currently ongoing. Software must not attempt to perform any write access to the flash program memory at this time, without also polling the FSMSTAT.FMFULL bit in the flash memory interface. The DPGMBUSY bit is a copy of the FMBUSY bit in the FSMSTAT register.
0 – Flash data memory is not busy.
1 – Flash data memory is busy.

Obsolete

8.0 Flash Memory

The flash memory consists of the flash program memory and the flash data memory. The flash program memory is further divided into the Boot Area and the Code Area.

A special protection scheme is applied to the lower portion of the flash program memory, called the Boot Area. The Boot Area always starts at address 0 and ranges up to a programmable end address. The maximum boot area address which can be selected is 00 1BFFh. The intended use of this area is to hold In-System-Programming (ISP) routines or essential application routines. The Boot Area is always protected against CPU write access, to avoid unintended modifications.

The Code Area is intended to hold the application code and constant data. The Code Area begins with the next byte after the Boot Area. Table 12 summarizes the properties of the regions of flash memory mapped into the CPU address space.

Table 12 Flash Memory Areas

Area	Address Range	Read Access	Write Access
Boot Area	0–BOOTAREA - 1	Yes	No
Code Area	BOOTAREA–03 FFFFh	Yes	Write access only if section write enable bit is set and global write protection is disabled.
Data Area	0E 0000h–0E 1FFFh	Yes	Write access only if section write enable bit is set and global write protection is disabled.

8.1 FLASH MEMORY PROTECTION

The memory protection mechanisms provide both global and section-level protection. Section-level protection against CPU writes is applied to individual 8K-byte sections of the flash program memory and 512-byte sections of the flash data memory. Section-level protection is controlled through read/write registers mapped into the CPU address space. Global write protection is applied at the device level, to disable flash memory writes by the CPU. Global write protection is controlled by the encoding of bits stored in the flash memory array.

8.1.1 Section-Level Protection

Each bit in the Flash Memory Write Enable (FM0WER and FM1WER) registers enables or disables write access to a corresponding section of flash program memory. Write access to the flash data memory is controlled by the bits in the Flash Slave Memory Write Enable (FSM0WER) register. By default (after reset) all bits in the FM0WER, FM1WER, and FSM0WER registers are cleared, which disables write access by the CPU to all sections. Write access to a section is enabled by setting the corresponding write enable bit. After completing a programming or erase operation, software should clear all write enable bits to protect the flash program memory against any unintended writes.

8.1.2 Global Protection

The WRPROT field in the Protection Word controls global write protection. The Protection Word is located in a special flash memory outside of the CPU address space. If a majority of the bits in the 3-bit WRPROT field are clear, write protection is enabled. Enabling this mode prevents the CPU from writing to flash memory.

The RDPROT field in the Protection Word controls global read protection. If a majority of the bits in the 3-bit RDPROT field are clear, read protection is enabled. Enabling this mode prevents reading by an external debugger through the serial debug interface or by an external flash programmer. CPU read access is not affected by the RDPROT bits.

8.2 FLASH MEMORY ORGANIZATION

Each of the flash memories are divided into main blocks and information blocks. The main blocks hold the code or data used by application software. The information blocks hold factory parameters, protection settings, and other device-specific data. The main blocks are mapped into the CPU address space. The information blocks are accessed indirectly through a register-based interface. Separate sets of registers are provided for accessing flash program memory (FM registers) and flash data memory (FSM registers). The flash program memory consists of two main blocks and two data blocks, as shown in Table 13. The flash data memory consists of one main block and one information block.

Table 13 Flash Memory Blocks

Name	Address Range	Function
Main Block 0	00 0000h–01 FFFFh (CPU address space)	Flash Program Memory
Information Block 0	000h–07Fh (address register)	Function Word, Factory Parameters
Main Block 1	02 0000h–03 FFFFh (CPU address space)	Flash Program Memory
Information Block 1	080h–0FFh (address register)	Protection Word, User Data
Main Block 2	0E 0000h–0E 1FFFh (CPU address space)	Flash Data Memory
Information Block 2	000h–07Fh (address register)	User Data

8.2.1 Main Block 0 and 1

Main Block 0 and Main Block 1 hold the 256K-byte program space, which consists of the Boot Area and Code Area.

Obsolete

Each block consists of sixteen 8K-byte sections. Write access by the CPU to Main Block 0 and Main Block 1 is controlled by the corresponding bits in the FM0WER and FM1WER registers, respectively. The least significant bit in each register controls the section at the lowest address.

8.2.2 Information Block 0

Information Block 0 contains 128 bytes, of which one 16-bit word has a dedicated function, called the Function Word. The Function Word resides at address 07Eh. It controls the power mode of an external USB transceiver. The remaining Information Block 0 locations are used to hold factory parameters.

Software only has read access to Information Block 0 through a register-based interface. The Function Word and the factory parameters are protected against CPU writes. Table 14 shows the structure of Information Block 0.

Table 14 Information Block 0

Name	Address Range	Read Access	Write Access
Function Word	07Eh–07Fh	Yes	No
Other (Used for Factory Parameters)	000h–07Dh		

8.2.3 Information Block 1

Information Block 1 contains 128 bytes, of which one 16-bit word has a dedicated function, called the Protection Word. The Protection Word resides at address 0FEh. It controls the global protection mechanisms and the size of the Boot Area. The Protection Word can be written by the CPU, however the changes only become valid after the next device reset. The remaining Information Block 1 locations can be used to store other user data. Erasing Information Block 1 also erases Main Block 1. Table 15 shows the structure of the Information Block 1.

Table 15 Information Block 1

Name	Address Range	Read Access	Write Access
Protection Word	0FEh–0FFh	Yes	Write access only if section write enable bit is set and global write protection is disabled.
Other (User Data)	080h–0FDh		

8.2.4 Main Block 2

Main Block 2 holds the 8K-byte data area, which consists of sixteen 512-byte sections. Write access by the CPU to Main Block 2 is controlled by the corresponding bits in the FSM0WER register. The least significant bit in the register controls the section at the lowest address.

3. Set the Page Erase (PER) bit. The PER bit is in the FM-

8.2.5 Information Block 2

Information Block 2 contains 128 bytes, which can be used to store user data. The CPU can always read Information Block 2. The CPU can write Information Block 2 only when global write protection is disabled. Erasing Information Block 2 also erases Main Block 2.

8.3 FLASH MEMORY OPERATIONS

Flash memory programming (erasing and writing) can be performed on the flash data memory while the CPU is executing out of flash program memory. Although the CPU can execute out of flash data memory, it cannot erase or write the flash program memory while executing from flash data memory. To erase or write the flash program memory, the CPU must be executing from the on-chip static RAM or off-chip memory.

An erase operation is required before programming. An erase operation sets all of the bits in the erased region. A programming operation clears selected bits.

The programming mechanism is pipelined, so that a new write request can be loaded while a previous request is in progress. When the FMFULL bit in the FMSTAT or FSMSTAT register is clear, the pipeline is ready to receive a new request. New requests may be loaded after checking only the FMFULL bit.

8.3.1 Main Block Read

Read accesses from flash program memory can only occur when the flash program memory is not busy from a previous write or erase operation. Read accesses from the flash data memory can only occur when both the flash program memory and the flash data memory are not busy. Both byte and word read operations are supported.

8.3.2 Information Block Read

Information block data is read through the register-based interface. Only word read operations are supported and the read address must be word-aligned (LSB = 0). The following steps are used to read from an information block:

1. Load the word address in the Flash Memory Information Block Address (FMIBAR) or Flash Slave Memory Information Block Address (FSMIBAR) register.
2. Read the data word by reading out the Flash Memory Information Block Data (FMIBDR) or Flash Slave Memory Information Block Data (FSMIBDR) register.

8.3.3 Main Block Page Erase

A flash erase operation sets all of the bits in the erased region. Pages of a main block can be individually erased if their write enable bits are set. This method cannot be used to erase the boot area, if defined. Each page in Main Block 0 and 1 consists of 1024 bytes (512 words). Each page in Main Block 2 consists of 512 bytes (256 words). To erase a page, the following steps are performed:

1. Verify that the Flash Memory Busy (FMBUSY) bit is clear. The FMBUSY bit is in the FMSTAT or FSMSTAT register.
2. Prevent accesses to the flash memory while erasing is in progress.
   CTRL or FSMCTRL register.

Obsolete

4. Write to an address within the desired page.
5. Wait until the FMBUSY bit becomes clear again.
6. Check the Erase Error (EERR) bit to confirm successful erase of the page. The EERR bit is in the FMSTAT or FSMSTAT register.
7. Repeat steps 4 through 6 to erase additional pages.
8. Clear the PER bit.

8.3.4 Main Block Module Erase

A module erase operation can be used to erase an entire main block. All sections within the block must be enabled for writing. If a boot area is defined in the block, it cannot be erased. The following steps are performed to erase a main block:

1. Verify that the Flash Memory Busy (FMBUSY) bit is clear. The FMBUSY bit is in the FMSTAT or FSMSTAT register.
2. Prevent accesses to the flash memory while erasing is in progress.
3. Set the Module Erase (MER) bit. The MER bit is in the FMCTRL or FSMCTRL register.
4. Write to any address within the desired main block.
5. Wait until the FMBUSY bit becomes clear again.
6. Check the Erase Error (EERR) bit to confirm successful erase of the block. The EERR bit is in the FMSTAT or FSMSTAT register.
7. Clear the MER bit.

8.3.5 Information Block Module Erase

Erasing an information block also erases the corresponding main block. If a boot area is defined in the main block, neither block can be erased. Page erase is not supported for information blocks. The following steps are performed to erase an information block:

1. Verify that the Flash Memory Busy (FMBUSY) bit is clear. The FMBUSY bit is in the FMSTAT or FSMSTAT register.
2. Prevent accesses to the flash memory while erasing is in progress.
3. Set the Module Erase (MER) bit. The MER bit is in the FMCTRL or FSMCTRL register.
4. Load the FMIBAR or FSMIBAR register with any address within the block, then write any data to the FMIBDR or FSMIBDR register.
5. Wait until the FMBUSY bit becomes clear again.
6. Check the Erase Error (EERR) bit to confirm successful erase of the block. The EERR bit is in the FMSTAT or FSMSTAT register.
7. Clear the MER bit.

8.3.6 Main Block Write

Writing is only allowed when global write protection is disabled. Writing by the CPU is only allowed when the write enable bit is set for the sector which contains the word to be written. The CPU cannot write the Boot Area. Only word-wide write access to word-aligned addresses is supported. The following steps are performed to write a word:

1. Verify that the Flash Memory Busy (FMBUSY) bit is clear. The FMBUSY bit is in the FMSTAT or FSMSTAT register.
2. Prevent accesses to the flash memory while the write is in progress.
3. Set the Program Enable (PE) bit. The PE bit is in the FMCTRL or FSMCTRL register.
4. Write a word to the desired word-aligned address. This starts a new pipelined programming sequence. The FMBUSY bit becomes set while the write operation is in progress. The FMFULL bit in the FMSTAT or FSMSTAT register becomes set if a previous write operation is still in progress.
5. Wait until the FMFULL bit becomes clear.
6. Repeat steps 4 and 5 for additional words.
7. Wait until the FMBUSY bit becomes clear again.
8. Check the programming error (PERR) bit to confirm successful programming. The PERR bit is in the FMSTAT or FSMSTAT register.
9. Clear the Program Enable (PE) bit.

8.3.7 Information Block Write

Writing is only allowed when global write protection is disabled. Writing by the CPU is only allowed when the write enable bit is set for the sector which contains the word to be written. The CPU cannot write Information Block 0. Only word-wide write access to word-aligned addresses is supported. The following steps are performed to write a word:

1. Verify that the Flash Memory Busy (FMBUSY) bit is clear. The FMBUSY bit is in the FMSTAT or FSMSTAT register.
2. Prevent accesses to the flash memory while the write is in progress.
3. Set the Program Enable (PE) bit. The PE bit is in the FMCTRL or FSMCTRL register.
4. Write the desired target address into the FMIBAR or FSMIBAR register.
5. Write the data word into the FMIBDR or FSMIBDR register. This starts a new pipelined programming sequence. The FMBUSY bit becomes set while the write operation is in progress. The FMFULL bit in the FMSTAT or FSMSTAT register becomes set if a previous write operation is still in progress.
6. Wait until the FMFULL bit becomes clear.
7. Repeat steps 4 through 6 for additional words.
8. Wait until the FMBUSY bit becomes clear again.
9. Check the programming error (PERR) bit to confirm successful programming. The PERR bit is in the FMSTAT or FSMSTAT register.
10. Clear the Program Enable (PE) bit.

8.4 INFORMATION BLOCK WORDS

Two words in the information blocks are dedicated to hold settings that affect the operation of the system: the Function Word in Information Block 0 and the Protection Word in Information Block 1.

8.4.1 Function Word

The Function Word resides in the Information Block 0 at address 07Eh. At reset, the Function Word is copied into the FMAR0 register.

15 … 1	0
Reserved	USB_ENABLE

Obsolete

USB_ENABLE The USB_ENABLE bit can be used to force an external USB transceiver into its low-power mode. The power mode is dependent on the USB controller status, the USB_ENABLE bit in the MCFG register (see Section 7.1), and the USB_ENABLE bit in the Function Word.

0 – External USB transceiver forced into low-power mode.

1 – Transceiver power mode dependent on USB controller status and programming of the Function Word.

8.4.2 Protection Word

The Protection Word resides in Information Block 1 at address 0FEh. At reset, the Protection Word is copied into the FMAR1 register.

15 13	12 10	9 7	6 4	3 1	0
WRPROT	RDPROT	ISPE	EMPTY	BOOTAREA	1

BOOTAREA The BOOTAREA field specifies the size of the Boot Area. The Boot Area starts at address 0 and ends at the address specified by this field. The inverted bits of the BOOTAREA field count the number of 1024-byte blocks to be reserved as the Boot Area. The maximum Boot Area size is 7K bytes (address range 0 to 1BFFh). The end of the Boot Area defines the start of the Code Area. If the device starts in ISP mode and there is no Boot Area defined (encoding 111b), the device is kept in reset. Table 16 lists all possible boot area encodings.

Table 16 Boot Area Encodings

BOOT AREA	Size of the Boot Area	Code Area Start Address
111	No Boot Area defined	00 0000h
110	1024 bytes	00 0400h
101	2048 bytes	00 0800h
100	3072 bytes	00 0C00h
011	4096 bytes	00 1000h
010	5120 bytes	00 1400h
001	6144 bytes	00 1800h
000	7168 bytes	00 1C00h

EMPTY The EMPTY field indicates whether the flash program memory has been programmed or should be treated as blank. If a majority of the three EMPTY bits are clear, the flash program memory is treated as programmed. If a majority of the EMPTY bits are set, the flash program memory is treated as empty. If the ENV[1:0] inputs (see Section 6.1) are sampled high at reset and the EMPTY bits indicate the flash program memory is empty, the device will begin execution in ISP mode. The device enters ISP mode without regard to the EMPTY status if ENV0 is driven low and ENV1 is driven high.

ISPE The ISPE field indicates whether the Boot Area is used to hold In-System-Programming routines or user application routines. If a majority of the three ISPE bits are set, the Boot Area holds ISP routines. If majority of the ISPE bits are clear, the Boot Area holds user application routines. Table 17 summarizes all possible EMPTY, ISPE, and Boot Area settings and the corresponding start-up operation for each combination. In DEV mode, the EMPTY bit settings are ignored and the CPU always starts executing from address 0.

Table 17 CPU Reset Behavior

EMPTY	ISPE	Boot Area	Start-Up Operation
Not Empty	ISP	Defined	Device starts in IRE/ ERE mode from Code Area start address
Not Empty	ISP	Not Defined	Device starts in IRE/ ERE mode from Code Area start address
Not Empty	No ISP	Don't Care	Device starts in IRE/ ERE mode from address 0
Empty	ISP	Defined	Device starts in ISP mode from Code Area start address
Empty	ISP	Not Defined	Device starts in ISP mode and is kept in its reset state
Empty	No ISP	Don't Care	

RDPROT The RDPROT field controls the global read protection mechanism for the on-chip flash program memory. If a majority of the three RDPROT bits are clear, the flash program memory is protected against read access from the serial debug interface or an external flash programmer. CPU read access is not affected by the RDPROT bits. If a majority of the RDPROT bits are set, read access is allowed.

WRPROT The WRPROT field controls the global write protection mechanism for the on-chip flash program memory. If a majority of the three WRPROT bits are clear, the flash program memory is protected against write access from any source and read access from the se-

Obsolete

rial debug interface. If a majority of the WR-PROT bits are set, write access is allowed.

8.5 FLASH MEMORY INTERFACE REGISTERS

There is a separate interface for the program flash and data flash memories. The same set of registers exist in both interfaces. In most cases they are independent of each other, but in some cases the program flash interface controls the interface for both memories, as indicated in the following sections. Table 18 lists the registers.

Table 18 Flash Memory Interface Registers

Program Memory	Data Memory	Description
FMIBAR FF F940h	FSMIBAR FF F740h	Flash Memory Information Block Address Register
FMIBDR FF F942h	FSMIBDR FF F742h	Flash Memory Information Block Address Register
FM0WER FF F944h	FSM0WER FF F744h	Flash Memory 0 Write Enable Register
FM1WER FF F946h	N/A	Flash Memory 1 Write Enable Register
FMCTRL FF F94Ch	FSMCTRL FF F74Ch	Flash Memory Control Register
FMSTAT FF F94Eh	FSMSTAT FF F74Eh	Flash Memory Status Register
FMPSR FF F950h	FSMPSR FF F750h	Flash Memory Prescaler Register
FMSTART FF F952h	FSMSTART FF F752h	Flash Memory Start Time Reload Register
FMTRAN FF F954h	FSMTRAN FF F754h	Flash Memory Transition Time Reload Register
FMPROG FF F956h	FSMPROG FF F756h	Flash Memory Programming Time Reload Register
FMPERASE FF F958h	FSMPERASE FF F758h	Flash Memory Page Erase Time Reload Register
FMMERASE0 FF F95Ah	FSMMERASE0 FF F75Ah	Flash Memory Module Erase Time Reload Register 0
FMEND FF F95Eh	FSMEND FF F75Eh	Flash Memory End Time Reload Register
FMMEND FF F960h	FSMMEND FF F760h	Flash Memory Module Erase End Time Reload Register
FMRCV FF F962h	FSMRCV FF F762h	Flash Memory Recovery Time Reload Register
FMAR0 FF F964h	FSMAR0 FF F764h	Flash Memory Auto-Read Register 0
FMAR1 FF F966h	FSMAR1 FF F766h	Flash Memory Auto-Read Register 1
FMAR2 FF F968h	FSMAR2 FF F768h	Flash Memory Auto-Read Register 2

8.5.1 Flash Memory Information Block Address Register (FMIBAR/FSMIBAR)

The FMIBAR register specifies the 8-bit address for read or write access to an information block. Because only word access to the information blocks is supported, the least significant bit (LSB) of the FMIBAR must be 0 (word-aligned). The hardware automatically clears the LSB, without regard to the value written to the bit. The FMIBAR register is cleared after device reset. The CPU bus master has read/write access to this register.

15 8	7 0
Reserved	IBA

IBA — The Information Block Address field holds the word-aligned address of an information block location accessed during a read or write transaction. The LSB of the IBA field is always clear.

Obsolete

8.5.2 Flash Memory Information Block Data Register (FMIBDR/FSMIBDR)

The FMIBDR register holds the 16-bit data for read or write access to an information block. The FMIBDR register is cleared after device reset. The CPU bus master has read/write access to this register.

15	0
IBD	

IBD — The Information Block Data field holds the data word for access to an information block. For write operations the IBD field holds the data word to be programmed into the information block location specified by the IBA address. During a read operation from an information block, the IBD field receives the data word read from the location specified by the IBA address.

8.5.3 Flash Memory 0 Write Enable Register (FM0WER/FSM0WER)

The FM0WER register controls section-level write protection for the first half of the flash program memory. The FMS0WER registers controls section-level write protection for the flash data memory. Each data block is divided into 16 8K-byte sections. Each bit in the FM0WER and FSM0WER registers controls write protection for one of these sections. The FM0WER and FSM0WER registers are cleared after device reset, so the flash memory is write protected after reset. The CPU bus master has read/write access to this registers.

15	0
FM0WE	

FM0WEn — The Flash Memory 0 Write Enable n bits control write protection for a section of a flash memory data block. The address mapping of the register bits is shown below.

Bit	Logical Address Range
0	00 0000h–00 1FFFh
1–14	. . .
15	01 E000h–01 FFFFh

8.5.4 Flash Memory 1 Write Enable Register (FM1WER)

The FM1WER register controls write protection for the second half of the program flash memory. The data block is divided into 16 8K-byte sections. Each bit in the FM1WER register controls write protection for one of these sections. The FM1WER register is cleared after device reset, so the flash memory is write protected after reset. The CPU bus master has read/write access to this registers.

15	0
FM1WE	

FM1WEn — The Flash Memory 1 Write Enable n bits control write protection for a section of a flash memory data block. The address mapping of the register bits is shown below.

Bit	Logical Address Range
0	02 0000h–02 1FFFh
1–14	. . .
15	03 E000h–03 FFFFh

8.5.5 Flash Data Memory 0 Write Enable Register (FSM0WER)

The FSM0WER register controls write protection for the flash data memory. The data block is divided into 16 512-byte sections. Each bit in the FSM0WER register controls write protection for one of these sections. The FSM0WER register is cleared after device reset, so the flash memory is write protected after reset. The CPU bus master has read/write access to this registers.

15	0
FSM0WE	

FSM0WEn — The Flash Data Memory 0 Write Enable n bits control write protection for a section of a flash memory data block. The address mapping of the register bits is shown below.

Bit	Logical Address Range
0	0E 0000h–0E 01FFh
1–14	. . .
15	0E 1E00h–0E 1FFFh

Obsolete

8.5.6 Flash Memory Control Register (FMCTRL/ FSMCTRL)

This register controls the basic functions of the Flash program memory. The register is clear after device reset. The CPU bus master has read/write access to this register.

7	6	5	4	3	2	1	0
MER	PER	PE	IENPROG	DISVRF	Res.	CWD	LOWPRW

LOWPRW The Low Power Mode controls whether flash program memory is operated in low-power mode, which draws less current when data is read. This is accomplished be only accessing the flash program memory during the first half of the clock period. The low-power mode must not be used at System Clock frequencies above 25 MHz, otherwise a read access may return undefined data. This bit must not be changed while the flash program memory is busy being programmed or erased.
0 – Normal mode.
1 – Low-power mode.

CWD The CPU Write Disable bit controls whether the CPU has write access to flash memory. This bit must not be changed while FMBUSY is set.
0 – The CPU has write access to the flash memory
1 – An external debugging tool is the current "owner" of the flash memory interface, so write accesses by the CPU are inhibited.

DISVRF The Disable Verify bit controls the automatic verification feature. This bit must not be changed while the flash program memory is busy being programmed or erased.
0 – New flash program memory contents are automatically verified after programming.
1 – Automatic verification is disabled.

IENPROG The Interrupt Enable for Program bit is clear after reset. The flash program and data memories share a single interrupt channel but have independent interrupt enable control bits.
0 – No interrupt request is asserted to the ICU when the FMFULL bit is cleared.
1 – An interrupt request is made when the FMFULL bit is cleared and new data can be written into the write buffer.

PE The Program Enable bit controls write access of the CPU to the flash program memory. This bit must not be altered while the flash program memory is busy being programmed or erased. The PER and MER bits must be clear when this bit is set.
0 – Programming the flash program memory by the CPU is disabled.
1 – Programming the flash program memory is enabled.

PER The Page Erase Enable bit controls whether a a valid write operation triggers an erase operation on a 1024-byte page of flash memory. Page erase operations are only supported for the main blocks, not the information blocks. A page erase operation on an information block is ignored and does not alter the information block. When the PER bit is set, the PE and MER bits must be clear. This bit must not be changed while the flash program memory is busy being programmed or erased.
0 – Page erase mode disabled. Write operations are performed normally.
1 – A valid write operation to a word location in program memory erases the page that contains the word.

MER The Module Erase Enable bit controls whether a valid write operation triggers an erase operation on an entire block of flash memory. If an information block is written in this mode, both the information block and its corresponding main block are erased. When the MER bit is set, the PE and PER bits must be clear. This bit must not be changed while the flash program memory is busy being programmed or erased.
0 – Module erase mode disabled. Write operations are performed normally.
1 – A valid write operation to a word location in a main block erases the block that contains the word. A valid write operation to a word location in an information block erases the block that contains the word and its associated main block.

8.5.7 Flash Memory Status Register (FMSTAT/ FSMSTAT)

This register reports the currents status of the on-chip Flash memory. The FLSR register is clear after device reset. The CPU bus master has read/write access to this register.

7 5	4	3	2	1	0
Reserved	DERR	FMFULL	FMBUSY	PERR	EERR

EERR The Erase Error bit indicates whether an error has occurred during a page erase or module (block) erase. After an erase error occurs, software can clear the EERR bit by writing a 1 to it. Writing a 0 to the EERR bit has no effect. Software must not change this bit while the flash program memory is busy being programmed or erased.
0 – The erase operation was successful.
1 – An erase error occurred.

Obsolete

PERR — The Program Error bit indicates whether an error has occurred during programming. After a programming error occurs, software can clear the PERR bit by writing a 1 to it. Writing a 0 to the PERR bit has no effect. Software must not change this bit while the flash program memory is busy being programmed or erased.
0 – The programming operation was successful.
1 – A programming error occurred.

FMBUSY — The Flash Memory Busy bit indicates whether the flash memory (either main block or information block) is busy being programmed or erased. During that time, software must not request any further flash memory operations. If such an attempt is made, the CPU is stopped as long as the FMBUSY bit is active. The CPU must not attempt to read from program memory (including instruction fetches) while it is busy.
0 – Flash memory is ready to receive a new erase or programming request.
1 – Flash memory busy with previous erase or programming operation.

FMFULL — The Flash Memory Buffer Full bit indicates whether the write buffer for programming is full or not. When the buffer is full, new erase and write requests may not be made. The IENPROG bit can be enabled to trigger an interrupt when the buffer is ready to receive a new request.
0 – Buffer is ready to receive new erase or write requests.
1 – Buffer is full. No new erase or write requests can be accepted.

DERR — The Data Loss Error bit indicates that a buffer overrun has occurred during a programming sequence. After a data loss error occurs, software can clear the DERR bit by writing a 1 to it. Writing a 0 to the DERR bit has no effect. Software must not change this bit while the flash program memory is busy being programmed or erased.
0 – No data loss error occurred.
1 – Data loss error occurred.

8.5.8 Flash Memory Prescaler Register (FMPSR/FSMPSR)

The FMPSR register is a byte-wide read/write register that selects the prescaler divider ratio. The CPU must not modify this register while an erase or programming operation is in progress (FMBUSY is set). At reset, this register is initialized to 04h if the flash memory is idle. The CPU bus master has read/write access to this register.

7 – 5	4 – 0
Reserved	FTDIV

FTDIV — The prescaler divisor scales the frequency of the System Clock by a factor of (FTDIV + 1).

8.5.9 Flash Memory Start Time Reload Register (FMSTART/FSMSTART)

The FMSTART/FSMSTART register is a byte-wide read/write register that controls the program/erase start delay time. Software must not modify this register while a program/erase operation is in progress (FMBUSY set). At reset, this register is initialized to 18h if the flash memory is idle. The CPU bus master has read/write access to this register.

7 – 0
FTSTART

FTSTART — The Flash Timing Start Delay Count field generates a delay of (FTSTART + 1) prescaler output clocks.

Obsolete

8.5.10 Flash Memory Transition Time Reload Register (FMTRAN/FSMTRAN)

The FMTRAN/FMSTRAN register is a byte-wide read/write register that controls some program/erase transition times. Software must not modify this register while program/erase operation is in progress (FMBUSY set). At reset, this register is initialized to 30h if the flash memory is idle. The CPU bus master has read/write access to this register.

7							0
FTTRAN							

FTTRAN The Flash TIming Transition Count field specifies a delay of (FTTRAN + 1) prescaler output clocks.

8.5.11 Flash Memory Programming Time Reload Register (FMPROG/FSMPROG)

The FMPROG/FSMPROG register is a byte-wide read/write register that controls the programming pulse width. Software must not modify this register while a program/erase operation is in progress (FMBUSY set). At reset, this register is initialized to 16h if the flash memory is idle. The CPU bus master has read/write access to this register.

7							0
FTPROG							

FTPROG The Flash Timing Programming Pulse Width field specifies a programming pulse width of 8 × (FTPROG + 1) prescaler output clocks.

8.5.12 Flash Memory Page Erase Time Reload Register (FMPERASE/FSMPERASE)

The FMPERASE/FSMPERASE register is a byte-wide read/write register that controls the page erase pulse width. Software must not modify this register while a program/erase operation is in progress (FMBUSY set). At reset, this register is initialized to 04h if the flash memory is idle. The CPU bus master has read/write access to this register.

7							0
FTPER							

FTPER The Flash Timing Page Erase Pulse Width field specifies a page erase pulse width of 4096 × (FTPER + 1) prescaler output clocks.

8.5.13 Flash Memory Module Erase Time Reload Register 0 (FMMERASE0/FSMMERASE0)

The FMMERASE0/FSMMERASE0 register is a byte-wide read/write register that controls the module erase pulse width. Software must not modify this register while a program/erase operation is in progress (FMBUSY set). At reset, this register is initialized to EAh if the flash memory is idle. The CPU bus master has read/write access to this register.

7							0
FTMER							

FTMER The Flash Timing Module Erase Pulse Width field specifies a module erase pulse width of 4096 × (FTMER + 1) prescaler output clocks.

8.5.14 Flash Memory End Time Reload Register (FMEND/FSMEND)

The FMEND/FSMEND register is a byte-wide read/write register that controls the delay time after a program/erase operation. Software must not modify this register while a program/erase operation is in progress (FMBUSY set). At reset, this register is initialized to 18h when the flash memory on the chip is idle. The CPU bus master has read/write access to this register.

7							0
FTEND							

FTEND The Flash Timing End Delay Count field specifies a delay of (FTEND + 1) prescaler output clocks.

8.5.15 Flash Memory Module Erase End Time Reload Register (FMMEND/FSMMEND)

The FMMEND/FSMMEND register is a byte-wide read/write register that controls the delay time after a module erase operation. Software must not modify this register while a program/erase operation is in progress (FMBUSY set). At reset, this register is initialized to 3Ch if the flash memory is idle. The CPU bus master has read/write access to this register.

7							0
FTMEND							

FTMEND The Flash Timing Module Erase End Delay Count field specifies a delay of 8 × (FTMEND + 1) prescaler output clocks.

Obsolete

8.5.16 Flash Memory Recovery Time Reload Register (FMRCV/FSMRCV)

The FMRCV/FSMRCV register is a byte-wide read/write register that controls the recovery delay time between two flash memory accesses. Software must not modify this register while a program/erase operation is in progress (FMBUSY set). At reset, this register is initialized to 04h if the flash memory is idle. The CPU bus master has read/write access to this register.

7	0
FTRCV	

FTRCV — The Flash Timing Recovery Delay Count field specifies a delay of (FTRCV + 1) prescaler output clocks.

8.5.17 Flash Memory Auto-Read Register 0 (FMAR0/FSMAR0)

The FMAR0/FSMAR0 register contains a copy of the Function Word from Information Block 0. The Function Word is sampled at reset. The contents of the FMAR0 register are used to enable or disable special device functions. The CPU bus master has read-only access to this register. The FSMAR0 register has the same value as the FMAR0 register

15	1	0
Reserved		USB_ENABLE

USB_ENABLE — The USB_ENABLE bit can be used to force an external USB transceiver into its low-power mode. The USB power mode is dependent on the USB controller status, the USB_ENABLE bit in the MCFG register (see Section 7.1), and the USB_ENABLE bit in the Function Word.

0 – External USB transceiver forced into low-power mode.

1 – Transceiver power mode dependent on USB controller status and programming of the Function Word.

8.5.18 Flash Memory Auto-Read Register 1 (FMAR1/FSMAR1)

The FMAR1 register contains a copy of the Protection Word from Information Block 1. The Protection Word is sampled at reset. The contents of the FMAR1 register define the current Flash memory protection settings. The CPU bus master has read-only access to this register. The FSMAR1 register has the same value as the FMAR1 register. The format is the same as the format of the Protection Word (see Section 8.4.2).

15 13	12 10	9 7	6 4	3 1	0
WRPROT	RDPROT	ISPE	EMPTY	BOOTAREA	1

8.5.19 Flash Memory Auto-Read Register 2 (FMAR2/FSMAR2)

The FMAR2 register is a word-wide read-only register, which is loaded during reset. It is used to build the Code Area start address. At reset, the CPU executes a branch, using the contents of the FMAR2 register as displacement. The CPU bus master has read-only access to this register.

The FSMAR2 register has the same value as the FMAR2 register.

7	0
CADR7:0	

15 13	12 9	8
CADR15:13	CADR12:8	CADR8

CADR8:0 — The Code Area Start Address (bits 8:0) contains the lower 9 bits of the Code Area start address. The CADR8:0 field has a fixed value of 0.

CADR12:9 — The Code Area Start Address (bits 12:9) are loaded during reset with the inverted value of BOOTAREA3:0.

CADR15:13 — The Code Area Start Address (bits 15:13) contains the upper 3 bits of the Code Area start address. The CADR15:13 field has a fixed value of 0.

Obsolete

9.0 DMA Controller

The DMA Controller (DMAC) has a register-based programming interface, as opposed to an interface based on I/O control blocks. After loading the registers with source and destination addresses, as well as block size and type of operation, a DMAC channel is ready to respond to DMA transfer requests. A request can only come from on-chip peripherals or software, not external peripherals. On receiving a DMA transfer request, if the channel is enabled, the DMAC performs the following operations:

1. Arbitrates to become master of the CPU bus.
2. Determines priority among the DMAC channels, one clock cycle before T1 of the DMAC transfer cycle. (T1 is the first clock cycle of the bus cycle.) Priority among the DMAC channels is fixed in descending order, with Channel 0 having the highest priority.
3. Executes data transfer bus cycle(s) selected by the values held in the control registers of the channel being serviced, and according to the accessed memory address. The DMAC acknowledges the request during the bus cycle that accesses the requesting device.
4. If the transfer of a block is terminated, the DMAC does the following:
   Updates the termination bits.
   Generates an interrupt (if enabled).
   Goes to step 6.
5. If $\overline{\text{DMRQ}}$n is still active, and the Bus Policy is “continuous”, returns to step 3.
6. Returns mastership of the CPU bus to the CPU.

Each DMAC channel can be programmed for direct (flyby) or indirect (memory-to-memory) data transfers. Once a DMAC transfer cycle is in progress, the next transfer request is sampled when the DMAC acknowledge is de-asserted, then on the rising edge of every clock cycle.

The configuration of either address freeze or address update (increment or decrement) is independent of the number of transferred bytes, transfer direction, or number of bytes in each DMAC transfer cycle. All these can be configured for each channel by programming the appropriate control registers.

Each DMAC channel has eight control registers. DMAC channels are described hereafter with the suffix n, where n = 0 to 3, representing the channel number in the registernames.

9.1 CHANNEL ASSIGNMENT

Table 19 shows the assignment of the DMA channels to different tasks. Four channels can be shared by a primary and an secondary function. However, only one source at a time can be enabled. If a channel is used for memory block transfers, other resources must be disabled.

Table 19 DMA Channel Assignment

Channel	Peripheral	Trans-action	Register
0 (Primary)	USB	R/W	RX/TX FIFO
0 (Secondary)	UART	R	RXBUF
1 (Primary)	UART	W	TXBUF
1 (Secondary)	unused	N/A	N/A
2 (Primary)	Audio Interface	R	ARDR0
2 (Secondary)	CVSD/PCM Transcoder	R	PCMOUT
3 (Primary)	Audio Interface	W	ATDR0
3 (Secondary)	CVSD/PCM Transcoder	W	PCMIN

9.2 TRANSFER TYPES

The DMAC uses two data transfer modes, Direct (Flyby) and Indirect (Memory-to-Memory). The choice of mode depends on the required bus performance and whether direct mode is available for the transfer. Indirect mode must be used when the source and destination have differing bus widths, when both the source and destination are in memory, and when the destination does not support direct mode.

9.2.1 Direct (Flyby) Transfers

In direct mode each data item is transferred using a single bus cycle, without reading the data into the DMAC. It provides the fastest transfer rate, but it requires identical source and destination bus widths. The DMAC cannot use Direct cycles between two memory devices. One of the devices must be an I/O device that supports the Direct (Flyby) mechanism, as shown in Figure 2.

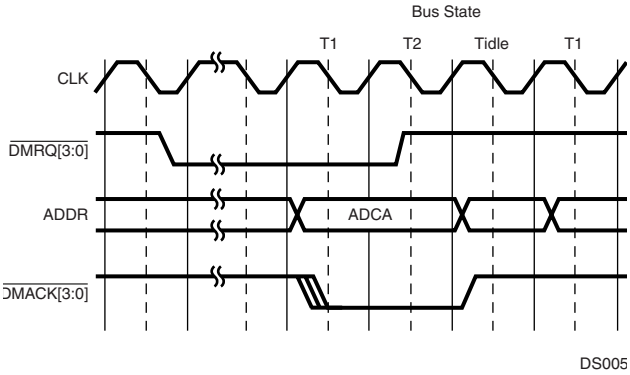

Figure 2. Direct DMA Cycle Followed by a CPU Cycle

Direct mode supports two bus policies: intermittent and continuous. In intermittent mode, the DMAC gives bus mastership back to the CPU after every cycle. In continuous mode, the DMAC remains bus master until the transfer is complet-

Obsolete

ed. The maximum bus throughput in intermittent mode is one transfer for every three System Clock cycles. The maximum bus throughput in continuous mode is one transfer for every clock cycle.

The I/O device which made the DMA request is called the implied I/O device. The other device can be either memory or another I/O device, and is called the addressed device.

Because only one address is required in direct mode, this address is taken from the corresponding ADCAn counter. The DMAC channel generates either a read or a write bus cycle, as controlled by the DMACNTLn.DIR bit.

When the DMACNTLn.DIR bit is clear, a read bus cycle from the addressed device is performed, and the data is written to the implied I/O device. When the DMACNTLn.DIR bit is set, a write bus cycle to the addressed device is performed, and the data is read from the implied I/O device.

The configuration of either address freeze or address update (increment or decrement) is independent of the number of transferred bytes, transfer direction, or number of bytes in each DMAC transfer cycle. All these can be configured for each channel by programming the appropriate control register.

Whether 8 or 16 bits are transferred in each cycle is selected by the DMACNTLn.TCS register bit. After the data item has been transferred, the BLTCn counter is decremented by one. The ADCAn counter is updated according to the INCA and ADA fields in the DMACNTLn register.

9.2.2 Indirect (Memory-To-Memory) Transfers

In indirect (memory-to-memory) mode, data transfers use two consecutive bus cycles. The data is first read into a temporary register, and then written to the destination in the following cycle. This mode is slower than the direct (flyby) mode, but it provides support for different source and destination bus widths. Indirect mode must be used for transfers between memory devices.

If an intermittent bus policy is used, the maximum throughput is one transfer for every five clock cycles. If a continuous bus policy is used, maximum throughput is one transfer for every two clock cycles.

When the DMACNTLn.DIR bit is 0, the first bus cycle reads data from the source using the ADCAn counter, while the second bus cycle writes the data into the destination using the ADCBn counter. When the DMACNTLn.DIR bit is set, the first bus cycle reads data from the source using the ADCBn counter, while the second bus cycle writes the data into the destination addressed by the ADCAn counter.

The number of bytes transferred in each cycle is taken from the DMACNTLn.TCS register bit. After the data item has been transferred, the BLTCn counter is decremented by one. The ADCAn and ADCBn counters are updated according to the INCA, INCB, ADA, and ADB fields in the DMACNTLn register.

9.3 OPERATION MODES

The DMAC operates in three different block transfer modes: single transfer, double buffer, and auto-initialize.

9.3.1 Single Transfer Operation

This mode provides the simplest way to accomplish a single block data transfer.

Initialization

1. Write the block transfer addresses and byte count into the corresponding ADCAn, ADCBn, and BLTCn counters.
2. Clear the DMACNTLn.OT bit to select non-auto-initialize mode. Clear the DMASTAT.VLD bit by writing a 1 to it.
3. Set the DMACNTLn.CHEN bit to activate the channel and enable it to respond to DMA transfer requests.

Termination

When the BLTCn counter reaches 0:

1. The transfer operation terminates.
2. The DMASTAT.TC and DMASTAT.OVR bits are set, and the DMASTAT.CHAC bit is cleared.
3. An interrupt is generated if enabled by the DMACNTLn.ETC or DMACNTLn.EOVR bits.

The DMACNTLn.CHEN bit must be cleared before loading the DMACNTLn register to avoid prematurely starting a new DMA transfer.

9.3.2 Double Buffer Operation

This mode allows software to set up the next block transfer while the current block transfer proceeds.

Initialization

1. Write the block transfer addresses and byte count into the ADCAn, ADCBn, and BLTCn counters.
2. Clear the DMACNTLn.OT bit to select non-auto-initialize mode. Clear the DMASTAT.VLD bit by writing a 1 to it.
3. Set the DMACNTLn.CHEN bit. This activates the channel and enables it to respond to DMA transfer requests.
4. While the current block transfer proceeds, write the addresses and byte count for the next block into the ADRAn, ADRBn, and BLTRn registers. The BLTRn register must be written last, because it sets the DMASTAT.VLD bit which indicates that all the parameters for the next transfer have been updated.

Continuation/Termination

When the BLTCn counter reaches 0:

1. The DMASTAT.TC bit is set.
2. An interrupt is generated if enabled by the DMACNTLn.ETC bit.
3. The DMAC channel checks the value of the VLD bit.

If the DMASTAT.VLD bit is set:

1. The channel copies the ADRAn, ADRBn, and BLTRn values into the ADCAn, ADCBn, and BLTCn registers.
2. The DMASTAT.VLD bit is cleared.
3. The next block transfer is started.

obsolete

If the DMASTAT.VLD bit is clear:

1. The transfer operation terminates.
2. The channel sets the DMASTAT.OVR bit.
3. The DMASTAT.CHAC bit is cleared.
4. An interrupt is generated if enabled by the DMACNTLn.EOVR bit.

The DMACNTLn.CHEN bit must be cleared before loading the DMACNTLn register to avoid prematurely starting a new DMA transfer.

Note: The ADCBn and ADRBn registers are used only in indirect (memory-to-memory) transfer. In direct (flyby) mode, the DMAC does not use them and therefore does not copy ADRBn into ADCBn.

9.3.3 Auto-Initialize Operation

This mode allows the DMAC to continuously fill the same memory area without software intervention.

Initialization

1. Write the block addresses and byte count into the ADCAn, ADCBn, and BLTCn counters, as well as the ADRAn, ADRBn, and BLTRn registers.
2. Set the DMACNTLn.OT bit to select auto-initialize mode.
3. Set the DMACNTLn.CHEN bit to activate the channel and enable it to respond to DMA transfer requests.

Continuation

When the BLTCn counter reaches 0:

1. The contents of the ADRAn, ADRBn, and BLTRn registers are copied to the ADCAn, ADCBn, and BLTCn counters.
2. The DMAC channel checks the value of the DMASTAT.TC bit.

If the DMASTAT.TC bit is set:

1. The DMASTAT.OVR bit is set.
2. A level interrupt is generated if enabled by the DMACNTLn.EOVR bit.
3. The operation is repeated.

If the DMASTAT.TC bit is clear:

1. The DMASTAT.TC bit is set.
2. A level interrupt is generated if enabled by the DMACNTLn.ETC bit.
3. The DMAC operation is repeated.

Termination

The DMA transfer is terminated when the DMACNTLn.CHEN bit is cleared.

9.4 SOFTWARE DMA REQUEST

In addition to the hardware requests from I/O devices, a DMA transfer request can also be initiated by software. A software DMA transfer request must be used for block copying between memory devices.

When the DMACNTLn.SWRQ bit is set, the corresponding DMA channel receives a DMA transfer request. When the DMACNTLn.SWRQ bit is clear, the software DMA transfer request of the corresponding channel is inactive.

For each channel, use the software DMA transfer request only when the corresponding hardware DMA request is inactive and no terminal count interrupt is pending. Software can poll the DMASTAT.CHAC bit to determine whether the DMA channel is already active. After verifying the DMASTATn.CHAC bit is clear (channel inactive), check the DMASTATn.TC (terminal count) bit. If the TC bit is clear, then no terminal count condition exists and therefore no terminal count interrupt is pending. If the channel is not active and no terminal count interrupt is pending, software may request a DMA transfer.

9.5 DEBUG MODE

When the FREEZE signal is active, all DMA operations are stopped. They will start again when the FREEZE signal goes inactive. This allows breakpoints to be used in debug systems.

9.6 DMA CONTROLLER REGISTER SET

There are four identical sets of DMA controller registers, as listed in Table 20.

Table 20 DMA Controller Registers

Name	Address	Description
ADCA0	FF F800h	Device A Address Counter Register
ADRA0	FF F804h	Device A Address Register
ADCB0	FF F808h	Device B Address Counter Register
ADRB0	FF F80Ch	Device B Address Register
BLTC0	FF F810h	Block Length Counter Register
BLTR0	FF F814h	Block Length Register
DMACNTL0	FF F81Ch	DMA Control Register
DMASTAT0	FF F81Eh	DMA Status Register
ADCA1	FF F820h	Device A Address Counter Register
ADRA1	FF F824h	Device A Address Register
ADCB1	FF F828h	Device B Address Counter Register
ADRB1	FF F82Ch	Device B Address Register
BLTC1	FF F830h	Block Length Counter Register
BLTR1	FF F834h	Block Length Register
DMACNTL1	FF F83Ch	DMA Control Register
DMASTAT1	FF F83Eh	DMA Status Register

Obsolete

Table 20 DMA Controller Registers

Name	Address	Description
ADCA2	FF F840h	Device A Address Counter Register
ADRA2	FF F844h	Device A Address Register
ADCB2	FF F848h	Device B Address Counter Register
ADRB2	FF F84Ch	Device B Address Register
BLTC2	FF F850h	Block Length Counter Register
BLTR2	FF F854h	Block Length Register
DMACNTL2	FF F85Ch	DMA Control Register
DMASTAT2	FF F85Eh	DMA Status Register
ADCA3	FF F860h	Device A Address Counter Register
ADRA3	FF F864h	Device A Address Register
ADCB3	FF F868h	Device B Address Counter Register
ADRB3	FF F86Ch	Device B Address Register
BLTC3	FF F870h	Block Length Counter Register
BLTR3	FF F874h	Block Length Register
DMACNTL3	FF F87Ch	DMA Control Register
DMASTAT3	FF F87Eh	DMA Status Register

9.6.1 Device A Address Counter Register (ADCAn)

The Device A Address Counter register is a 32-bit, read/write register. It holds the current 24-bit address of either the source data item or the destination location, depending on the state of the DIR bit in the CNTLn register. The ADA bit of DMACNTLn register controls whether to adjust the pointer in the ADCAn register by the step size specified in the INCA field of DMACNTLn register. The upper 8 bits of the ADCAn register are reserved and always clear.

31 24	23 0
Reserved	Device A Address Counter

9.6.2 Device A Address Register (ADRAn)

The Device A Address register is a 32-bit, read/write register. It holds the 24-bit starting address of either the next source data block, or the next destination data area, according to the DIR bit in the DMACNTLn register. The upper 8 bits of the ADRAn register are reserved and always clear.

31 24	23 0
Reserved	Device A Address

9.6.3 Device B Address Counter Register (ADCBn)

The Device B Address Counter register is a 32-bit, read/write register. It holds the current 24-bit address of either the source data item, or the destination location, according to the DIR bit in the CNTLn register. The ADCBn register is updated after each transfer cycle by INCB field of the DMACNTLn register according to ADB bit of the DMACNTLn register. In direct (flyby) mode, this register is not used. The upper 8 bits of the ADCBn register are reserved and always clear.

31 24	23 0
Reserved	Device B Address Counter

9.6.4 Device B Address Register (ADRBn)

The Device B Address register is a 32-bit, read/write register. It holds the 24-bit starting address of either the next source data block or the next destination data area, according to the DIR bit in the CNTLn register. In direct (flyby) mode, this register is not used. The upper 8 bits of the ADCRBn register are reserved and always clear.

31 24	23 0
Reserved	Device B Address

9.6.5 Block Length Counter Register (BLTCn)

The Block Length Counter register is a 16-bit, read/write register. It holds the current number of DMA transfers to be executed in the current block. BLTCn is decremented by one after each transfer cycle. A DMA transfer may consist of 1 or 2 bytes, as selected by the DMACNTLn.TCS bit.

15 0
Block Length Counter

Note: 0000h is interpreted as 2^{16}-1 transfer cycles.

obsolete

9.6.6 Block Length Register (BLTRn)

The Block Length register is a 16-bit, read/write register. It holds the number of DMA transfers to be performed for the next block. Writing this register automatically sets the DMASTAT.VLD bit.

15	0
Block Length	

Note: 0000h is interpreted as 2^{16}-1 transfer cycles.

9.6.7 DMA Control Register (DMACNTLn)

The DMA Control register n is a word-wide, read/write register that controls the operation of DMA channel n. This register is cleared at reset. Reserved bits must be written with 0.

7	6	5	4	3	2	1	0
BPC	OT	DIR	IND	TCS	EOVR	ETC	CHEN

15	14	13	12	11	10	9	8
Res.	INCB		ADB	INCA		ADA	SWRQ

CHEN — The Channel Enable bit must be set to enable any DMA operation on this channel. Writing a 1 to this bit starts a new DMA transfer even if it is currently a 1. If all DMACNTLn.CHEN bits are clear, the DMA clock is disabled to reduce power.
0 – Channel disabled.
1 – Channel enabled.

ETC — If the Enable Interrupt on Terminal Count bit is set, it enables an interrupt when the DMASTAT.TC bit is set.
0 – Interrupt disabled.
1 – Interrupt enabled.

EOVR — If the Enable Interrupt on OVR bit is set, it enables an interrupt when the DMASTAT.OVR bit is set.
0 – Interrupt disabled.
1 – Interrupt enabled.

TCS — The Transfer Cycle Size bit specifies the number of bytes transferred in each DMA transfer cycle. In direct (fly-by) mode, undefined results occur if the TCS bit is not equal to the addressed memory bus width.
0 – Byte transfers (8 bits per cycle).
1 – Word transfers (16 bits per cycle).

IND — The Direct/Indirect Transfer bit specifies the transfer type.
0 – Direct transfer (flyby).
1 – Indirect transfer (memory-to-memory).

DIR — The Transfer Direction bit specifies the direction of the transfer relative to Device A.
0 – Device A (pointed to by the ADCAn register) is the source. In Fly-By mode a read transaction is initialized.
1 – Device A (pointed to by the ADCAn register) is the destination. In Fly-By mode a write transaction is initialized.

OT — The Operation Type bit specifies the operation mode of the DMA controller.
0 – Single-buffer mode or double-buffer mode enabled.
1 – Auto-Initialize mode enabled.

BPC — The Bus Policy Control bit specifies the bus policy applied by the DMA controller. The operation mode can be either intermittent (cycle stealing) or continuous (burst).
0 – Intermittent operation. The DMAC channel relinquishes the bus after each transaction, even if the request is still asserted.
1 – Continuous operation. The DMAC channel n uses the bus continuously as long as the request is asserted. This mode can only be used for software DMA requests. For hardware DMA requests, the BPC bit must be clear.

SWRQ — The Software DMA Request bit is written with a 1 to initiate a software DMA request. Writing a 0 to this bit deactivates the software DMA request. The SWRQ bit must only be written when the DMRQ signal for this channel is inactive (DMASTAT.CHAC = 0).
0 – Software DMA request is inactive.
1 – Software DMA request is active.

ADA — If the Device A Address Control bit is set, it enables updating the Device A address.
0 – ADCAn address unchanged.
1 – ADCAn address incremented or decremented, according to INCA field of DMACNTLn register.

INCA — The Increment/Decrement ADCAn field specifies the step size for the Device A address increment/decrement.
00 – Increment ADCAn register by 1.
01 – Increment ADCAn register by 2.
10 – Decrement ADCAn register by 1.
11 – Decrement ADCAn register by 2.

ADB — If the Device B Address Control bit is set, it enables updating the Device B Address.
0 – ADCBn address unchanged.
1 – ADCBn address incremented or decremented, according to INCB field of DMACNTLn register.

INCB — The Increment/Decrement ADCBn field specifies the step size for the Device B address increment/decrement.
00 – Increment ADCBn register by 1.
01 – Increment ADCBn register by 2.
10 – Decrement ADCBn register by 1.
11 – Decrement ADCBn register by 2.

Obsolete

9.6.8 DMA Status Register (DMASTAT)

The DMA status register is a byte-wide, read register that holds the status information for the DMA channel n. This register is cleared at reset. The reserved bits always return zero when read. The VLD, OVR and TC bits are sticky (once set by the occurrence of the specific condition, they remain set until explicitly cleared by software). These bits can be individually cleared by writing 1 to the bit positions in the DMASTAT register to be cleared. Writing 0 to these bits has no effect

7 — 4	3	2	1	0
Reserved	VLD	CHAC	OVR	TC

TC — The Terminal Count bit indicates whether the transfer was completed by a terminal count condition (BLTCn Register reached 0).
0 – Terminal count condition did not occur.
1 – Terminal count condition occurred.

OVR — The behavior of the Channel Overrun bit depends on the operation mode (single buffer, double buffer, or auto-initialize) of the DMA channel.
In double-buffered mode (DMACNTLn.OT = 0):
The OVR bit is set when the present transfer is completed (BLTCn = 0), but the parameters for the next transfer (address and block length) are not valid (DMASTAT.VLD = 0).
In auto-initialize mode (DMACNTLn.OT = 1):
The OVR bit is set when the present transfer is completed (BLTCn = 0), and the DMASTAT.TC bit is still set.
In single-buffer mode:
Operates in the same way as double-buffer mode. In single-buffered mode, the DMASTAT.VLD bit should always be clear, so it will also be set when the DMASTAT.TC bit is set. Therefore, the OVR bit can be ignored in this mode.

CHAC — The Channel Active bit continuously indicates the active or inactive status of the channel, and therefore, it is read only. Data written to the CHAC bit is ignored.
0 – Channel inactive.
1 – Indicates that the channel is active (CHEN bit in the CNTLn register is 1 and BLTCn > 0)

VLD — The Transfer Parameters Valid bit specifies whether the transfer parameters for the next block to be transferred are valid. Writing the BLTRn register automatically sets this bit. The bit is cleared in the following cases:

- The present transfer is completed and the ADRAn, ADRBn (indirect mode only), and BLTR registers are copied to the ADCAn, ADCBn (indirect mode only), and BLTCn registers.
- Writing 1 to the VLD bit.

Obsolete

10.0 Interrupts

The Interrupt Control Unit (ICU) receives interrupt requests from internal and external sources and generates interrupts to the CPU. Interrupts from the timers, UARTs, Microwire/SPI interface, and Multi-Input Wake-Up are all maskable interrupts. The highest-priority interrupt is the Non-Maskable Interrupt (NMI), which is triggered by a falling edge received on the $\overline{\text{NMI}}$ input pin.

The priorities of the maskable interrupts are hardwired and therefore fixed. The interrupts are named IRQ0 through IRQ31, in which IRQ0 has the lowest priority and IRQ31 has the highest priority.

10.1 NON-MASKABLE INTERRUPTS

The Interrupt Control Unit (ICU) receives the external $\overline{\text{NMI}}$ input and generates the NMI signal driven to the CPU. The $\overline{\text{NMI}}$ input is an asynchronous input with Schmitt trigger characteristics and an internal synchronization circuit, therefore no external synchronizing circuit is needed. The $\overline{\text{NMI}}$ pin triggers an exception on its falling edge.

10.1.1 Non-Maskable Interrupt Processing

The CPU performs an interrupt acknowledge bus cycle when beginning to process a non-maskable interrupt. The address associated with this core bus cycle is within the internal core address space and may be monitored as a Core Bus Monitoring (CBM) clock cycle.

At reset, NMI interrupts are disabled and must remain disabled until software initializes the interrupt table, interrupt base register (INTBASE), and the interrupt mode. The external $\overline{\text{NMI}}$ interrupt is enabled by setting the EXNMI.ENLCK bit and will remain enabled until a reset occurs. Alternatively, the external $\overline{\text{NMI}}$ interrupt can be enabled by setting the EXNMI.EN bit and will remain enabled until an interrupt event or a reset occurs.

10.2 MASKABLE INTERRUPTS

The ICU receives level-triggered interrupt request signals from 31 internal sources and generates a vectored interrupt to the CPU when required. Priority among the interrupt sources (named IRQ1 through IRQ31) is fixed.

The maskable interrupts are globally enabled and disabled by the E bit in the PSR register. The EI and DI instructions are used to set (enable) and clear (disable) this bit. The global maskable interrupt enable bit (I bit in the PSR) must also be set before any maskable interrupts are taken.

Each interrupt source can be individually enabled or disabled under software control through the ICU interrupt enable registers and also through interrupt enable bits in the peripherals that request the interrupts. The CR16C core supports IRQ0, but in the CP3BT10 it is not connected to any interrupt source.

10.2.1 Maskable Interrupt Processing

Interrupt vector numbers are always positive, in the range 10h to 2Fh. The IVCT register contains the interrupt vector of the enabled and pending interrupt with the highest priority. The interrupt vector 10h corresponds to IRQ0 and the lowest priority, while the vector 2Fh corresponds to IRQ31 and the highest priority. The CPU performs an interrupt acknowledge bus cycle on receiving a maskable interrupt request from the ICU. During the interrupt acknowledge cycle, a byte is read from address FF FE00h (IVCT register). The byte is used as an index into the Dispatch Table to determine the address of the interrupt handler.

Because IRQ0 is not connected to any interrupt source, it would seem that the interrupt vector would never return the value 10h. If it does return a value of 10h, the entry in the dispatch table should point to a default interrupt handler that handles this error condition. One possible condition for this to occur is deassertion of the interrupt before the interrupt acknowledge cycle.

10.3 INTERRUPT CONTROLLER REGISTERS

Table 21 lists the ICU registers.

Table 21 Interrupt Controller Registers

Name	Address	Description
NMISTAT	FF FE02h	Non-Maskable Interrupt Status Register
EXNMI	FF FE04h	External NMI Trap Control and Status Register
IVCT	FF FE00h	Interrupt Vector Register
IENAM0	FF FE0Eh	Interrupt Enable and Mask Register 0
IENAM1	FF FE10h	Interrupt Enable and Mask Register 1
ISTAT0	FF FE0Ah	Interrupt Status Register 0
ISTAT1	FF FE0Ch	Interrupt Status Register 1

10.3.1 Non-Maskable Interrupt Status Register (NMISTAT)

The NMISTAT register is a byte-wide read-only register. It holds the status of the current pending Non-Maskable Interrupt (NMI) requests. On the CP3BT10, the external $\overline{\text{NMI}}$ input is the only source of NMI interrupts. The NMISTAT register is cleared on reset and each time its contents are read.

7 … 1	0
Reserved	EXT

EXT — The External NMI request bit indicates whether an external non-maskable interrupt request has occurred. Refer to the description of the EXNMI register below for additional details.
0 – No external NMI request.
1 – External NMI request has occurred.

Obsolete

10.3.2 External NMI Trap Control and Status Register (EXNMI)

The EXNMI register is a byte-wide read/write register. It indicates the current value of the $\overline{NMI}$ pin and controls the NMI interrupt trap generation based on a falling edge of the $\overline{NMI}$ pin. TST, EN and ENLCK are cleared on reset. When writing to this register, all reserved bits must be written with 0 for the device to function properly

7 – 3	2	1	0
Reserved	ENLCK	PIN	EN

EN — The EXNMI trap enable bit is one of two bits that can be used to enable NMI interrupts. The bit is cleared by hardware at reset and whenever the NMI interrupt occurs (EXNMI.EXT set). It is intended for applications where the $\overline{NMI}$ input toggles frequently but nested NMI traps are not desired. For these applications, the EN bit needs to be re-enabled before exiting the trap handler. When used this way, the ENLCK bit should never be set. The EN bit can be set and cleared by software (software can set this bit only if EXNMI.EXT is cleared), and should only be set after the interrupt base register and the interrupt stack pointer have been set up.
0 – NMI interrupts not enabled by this bit (but may be enabled by the ENLCK bit).
1 – NMI interrupts enabled.

PIN — The PIN bit indicates the state (non-inverted) on the $\overline{NMI}$ input pin. This bit is read-only, data written into it is ignored.
0 – $\overline{NMI}$ pin not asserted.
1 – $\overline{NMI}$ pin asserted.

ENLCK — The EXNMI trap enable lock bit is used to permanently enable NMI interrupts. Only a device reset can clear the ENLCK bit. This allows the external NMI feature to be enabled after the interrupt base register and the interrupt stack pointer have been set up. When the ENLCK bit is set, the EN bit is ignored.
0 – NMI interrupts not enabled by this bit (but may be enabled by the EN bit).
1 – NMI interrupts enabled.

10.3.3 Interrupt Vector Register (IVCT)

The IVCT register is a byte-wide read-only register which reports the encoded value of the highest priority maskable interrupt that is both asserted and enabled. The valid range is from 10h to 2Fh. The register is read by the CPU during an interrupt acknowledge bus cycle, and INTVECT is valid during that time. It may contain invalid data while INTVECT is updated.

7	6	5 – 0
0	0	INTVECT

INTVECT — The Interrupt Vector field indicates the highest priority interrupt which is both asserted and enabled.

10.3.4 Interrupt Enable and Mask Register 0 (IENAM0)

The IENAM0 register is a word-wide read/write register which holds bits that individually enable and disable the maskable interrupt sources IRQ1 through IRQ15. The register is initialized to FFFFh upon reset.

15 – 1	0
IENA	Res.

IENA — Each Interrupt Enable bit enables or disables the corresponding interrupt request IRQ1 through IRQ15, for example IENA15 controls IRQ15. Because IRQ0 is not used, IENA0 is ignored.
0 – Interrupt is disabled.
1 – Interrupt is enabled.

10.3.5 Interrupt Enable and Mask Register 1 (IENAM1)

The IENAM1 register is a word-wide read/write register which holds bits that individually enable and disable the maskable interrupt sources IRQ16 through IRQ31. The register is initialized to FFFFh at reset.

15 – 0
IENA

IENA — Each Interrupt Enable bit enables or disables the corresponding interrupt request IRQ16 through IRQ31, for example IENA15 controls IRQ31.
0 – Interrupt is disabled.
1 – Interrupt is enabled.

Obsolete

10.3.6 Interrupt Status Register 0 (ISTAT0)

The ISTAT0 register is a word-wide read-only register. It indicates which maskable interrupt inputs to the ICU are active. These bits are not affected by the state of the corresponding IENA bits.

15 … 1	0
IST	Res.

IST — The Interrupt Status bits indicate if a maskable interrupt source is signalling an interrupt request. IST[15:1] correspond to IRQ15 to IRQ1 respectively. Because the IRQ0 interrupt is not used, bit 0 always reads back 0.
0 – Interrupt is not active.
1 – Interrupt is active.

10.3.7 Interrupt Status Register 1 (ISTAT1)

The ISTAT1 register is a word-wide read-only register. It indicates which maskable interrupt inputs into the ICU are active. These bits are not affected by the state of the corresponding IENA bits.

15 … 0
IST

IST — The Interrupt Status bits indicate if a maskable interrupt source is signalling an interrupt request. IST[31:16] correspond to IRQ31 to IRQ16, respectively.
0 – Interrupt is not active.
1 – Interrupt is active.

10.4 MASKABLE INTERRUPT SOURCES

Table 22 shows the interrupts assigned to various on-chip maskable interrupts. The priority of simultaneous maskable interrupts is linear, with IRQ31 having the highest priority.

Table 22 Maskable Interrupts Assignment

IRQ Number	Details
IRQ31	TWM (Timer 0)
IRQ30	Bluetooth LLC 0
IRQ29	Bluetooth LLC 1
IRQ28	Bluetooth LLC 2
IRQ27	Bluetooth LLC 3
IRQ26	Bluetooth LLC 4
IRQ25	Bluetooth LLC 5
IRQ24	USB Interface
IRQ23	DMA Channel 0
IRQ22	DMA Channel 1
IRQ21	DMA Channel 2
IRQ20	DMA Channel 3
IRQ19	Reserved
IRQ18	Advanced Audio Interface
IRQ17	UART Rx
IRQ16	CVSD/PCM Converter
IRQ15	ACCESS.bus Interface
IRQ14	TA (Timer input A)
IRQ13	TB (Timer input B)
IRQ12	VTUA (VTU Interrupt Request 1)
IRQ11	VTUB (VTU Interrupt Request 2)
IRQ10	VTUC (VTU Interrupt Request 3)
IRQ9	VTUD (VTU Interrupt Request 4)
IRQ8	Microwire/SPI Rx/Tx
IRQ7	UART Tx
IRQ6	UART $\overline{CTS}$
IRQ5	MIWU Interrupt 0
IRQ4	MIWU Interrupt 1
IRQ3	MIWU Interrupt 2
IRQ2	MIWU Interrupt 3
IRQ1	Flash Program/Data Memory
IRQ0	Reserved

Obsolete

All reserved or unused interrupt vectors should point to a default or error interrupt handlers.

10.5 NESTED INTERRUPTS

Nested NMI interrupts are always enabled. Nested maskable interrupts are disabled by default, however an interrupt handler can allow nested maskable interrupts by setting the I bit in the PSR. The LPR instruction is used to set the I bit.

Nesting of specific maskable interrupts can be allowed by disabling interrupts from sources for which nesting is not allowed, before setting the I bit. Individual maskable interrupt sources can be disabled using the IENAM0 and IENAM1 registers.

Any number of levels of nested interrupts are allowed, limited only by the available memory for the interrupt stack.

Obsolete

11.0 Triple Clock and Reset

The Triple Clock and Reset module generates a 12 MHz Main Clock and a 32.768 kHz Slow Clock from external crystal networks or external clock sources. It provides various clock signals for the rest of the chip. It also provides the main system reset signal, a power-on reset function, Main Clock prescalers to generate two additional low-speed clocks, and a 32-kHz oscillator start-up delay.

Figure 3 is block diagram of the Triple Clock and Reset module.

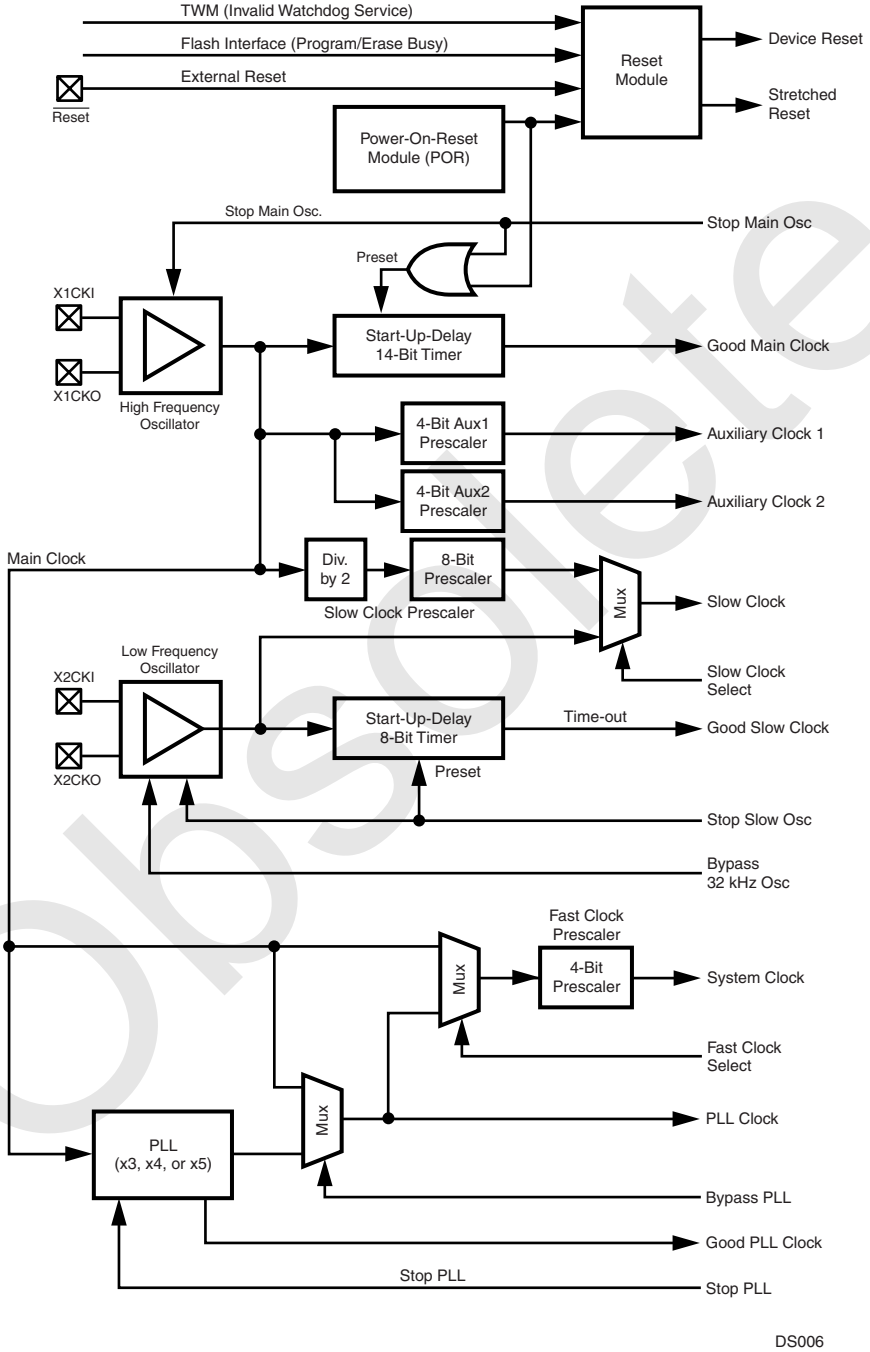

Figure 3. Triple Clock and Reset Module

Obsolete

11.1 EXTERNAL CRYSTAL NETWORK

An external crystal network is connected to the X1CKI and X1CKO pins to generate the Main Clock, unless an external clock signal is driven on the X1CKI pin. A similar external crystal network may be used at pins X2CKI and X2CKO for the Slow Clock. If an external crystal network is not used for the Slow Clock, the Slow Clock is generated by dividing the fast Main Clock.

The crystal network you choose may require external components different from the ones specified in this datasheet. In this case, consult with National's engineers for the component specifications

The crystals and other oscillator components must be placed close to the X1CKI/X1CKO and X2CKI/X2CKO device input pins to keep the printed trace lengths to an absolute minimum.

Figure 4 shows the required crystal network at X1CKI/X1CKO and optional crystal network at X2CKI/X2CKO. Table 23 shows the component specifications for the main crystal network and Table 24 shows the component specifications for the 32.768 kHz crystal network.

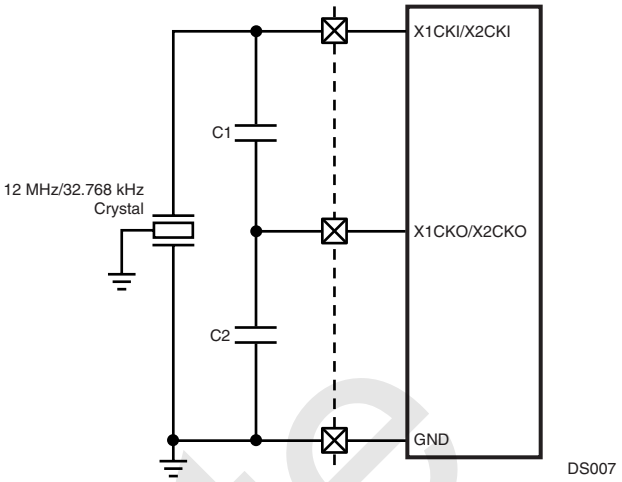

Figure 4. External Crystal Network

Table 23 Component Values of the High Frequency Crystal Circuit

Component	Parameters	Values	Tolerance
Crystal	Resonance Frequency Type Max. Serial Resistance Max. Shunt Capacitance Load Capacitance	12 MHz ± 20 ppm AT-Cut 50 Ω 7 pF 22 pF	N/A
Capacitor C1, C2	Capacitance	22 pF	20%

Table 24 Component Values of the Low Frequency Crystal Circuit

Component	Parameters	Values	Tolerance
Crystal	Resonance Frequency Type Maximum Serial Resistance Maximum Shunt Capacitance Load Capacitance Min. Q factor	32.768 kHz Parallel N-Cut or XY-bar 40 kΩ 2 pF 12.5 pF 40000	N/A
Capacitor C1, C2	Capacitance	25 pF	20%

Choose capacitor component values in the tables to obtain the specified load capacitance for the crystal when combined with the parasitic capacitance of the trace, socket, and package (which can vary from 0 to 8 pF). As a guideline, the load capacitance is:

$$CL = \frac{C1 \times C2}{C1 + C2} + Cparasitic$$

C2 > C1

C1 can be trimmed to obtain the desired load capacitance. The start-up time of the 32.768 kHz oscillator can vary from one to six seconds. The long start-up time is due to the high Q value and high serial resistance of the crystal necessary to minimize power consumption in Power Save mode.

11.2 MAIN CLOCK

The Main Clock is generated by the 12-MHz high-frequency oscillator or driven by an external signal (typically the LMX5252 RF chip). It can be stopped by the Power Management Module to reduce power consumption during periods of reduced activity. When the Main Clock is restarted, a 14-bit timer generates a Good Main Clock signal after a start-up delay of 32,768 clock cycles. This signal is an indicator that the high-frequency oscillator is stable.

Obsolete

The Stop Main Osc signal from the Power Management Module stops and starts the high-frequency oscillator. When this signal is asserted, it presets the 14-bit timer to 3FFFh and stops the high-frequency oscillator. When the signal goes inactive, the high-frequency oscillator starts and the 14-bit timer counts down from its preset value. When the timer reaches zero, it stops counting and asserts the Good Main Clock signal.

11.3 SLOW CLOCK

The Slow Clock is necessary for operating the device in reduced power modes and to provide a clock source for modules such as the Timing and Watchdog Module.

The Slow Clock operates in a manner similar to the Main Clock. The Stop Slow Osc signal from the Power Management Module stops and starts the low-frequency (32.768 kHz) oscillator. When this signal is asserted, it presets a 6-bit timer to 3Fh and disables the low-frequency oscillator. When the signal goes inactive, the low-frequency oscillator starts, and the 6-bit timer counts down from its preset value. When the timer reaches zero, it stops counting and asserts the Good Slow Clock signal, which indicates that the Slow Clock is stable.

For systems that do not require a reduced power consumption mode, the external crystal network may be omitted for the Slow Clock. In that case, the Slow Clock can be synthesized by dividing the Main Clock by a prescaler factor. The prescaler circuit consists of a fixed divide-by-2 counter and a programmable 8-bit prescaler register. This allows a choice of clock divisors ranging from 2 to 512. The resulting Slow Clock frequency must not exceed 100 kHz.

A software-programmable multiplexer selects either the prescaled Main Clock or the 32.768 kHz oscillator as the Slow Clock. At reset, the prescaled Main Clock is selected, ensuring that the Slow Clock is always present initially. Selection of the 32.768 kHz oscillator as the Slow Clock disables the clock prescaler, which allows the CLK1 oscillator to be turned off, which reduces power consumption and radiated emissions. This can be done only if the module detects a toggling low-speed oscillator. If the low-speed oscillator is not operating, the prescaler remains available as the Slow Clock source.

11.4 PLL CLOCK

The PLL Clock is generated by the PLL from the 12 MHz Main Clock by applying a multiplication factor of ×3, ×4, or ×5. The USB interface is clocked directly by the PLL Clock and requires a 48 MHz clock, so a ×4 scaling factor must be used if the USB interface is active.

To enable the PLL:

1. Set the PLL multiplication factor in PRFSC.MODE.
2. Clear the PLL power-down bit CRCTRL.PLLPWD.
3. Clear the high-frequency clock select bit CRCTRL.FCLK.
4. Read CRCTRL.FCLK, and go back to step 3 if not clear.

The CRCTRL.FCLK bit will be clear only after the PLL has stabilized, so software must repeat step 3 until the bit is clear. The clock source can be switched back to the Main Clock by setting the CRCTRL.FCLK bit.

The PRSFC register must not be modified while the System Clock is derived from the PLL Clock. The System Clock must be derived from the low-frequency oscillator clock while the MODE field is modified.

11.5 SYSTEM CLOCK

The System Clock drives most of the on-chip modules, including the CPU. Typically, it is driven by the Main Clock, but it can also be driven by the PLL. In either case, the clock signal is passed through a programmable divider (scale factors from ÷1 to ÷16).

11.6 AUXILIARY CLOCKS

Auxiliary Clock 1 and Auxiliary Clock 2 are generated from Main Clock for use by certain peripherals. Auxiliary Clock 1 is available for the Bluetooth controller and the Advanced Audio Interface. Auxiliary Clock 2 is available for the CVSD/PCM transcoder. The Auxiliary clocks may be configured to keep these peripherals running when the System Clock is slowed down or suspended during low-power modes.

11.7 POWER-ON RESET

The CP3BT10 has specific Power On Reset (POR) timing requirements that must be met to prevent corruption of the on-chip flash program and data memories. This timing sequence shown in Figure 5.

All reset circuits must ensure that this timing sequence is always maintained during power-up and power-down. The design of the power supply also affects how this sequence is implemented.

The power-up sequence is:

1. The $\overline{\text{RESET}}$ pin must be held low until *both* IOVCC and VCC have reached the minimum levels specified in the DC Characteristics section. IOVCC and VCC are allowed to reach their nominal levels at the same time which is the best-case scenario.
2. After both of these supply voltage rails have met this condition, then the $\overline{\text{RESET}}$ pin may be driven high. At power-up an internal 14-bit counter is set to 3FFFh and begins counting down to 0 after the crystal oscillator becomes stable. When this counter reaches 0, the on-chip $\overline{\text{RESET}}$ signal is driven high unless the external $\overline{\text{RESET}}$ pin is still being held low. This prevents the CP3BT10 from coming out of reset with an unstable clock source.

The power-down sequence is:

1. The $\overline{\text{RESET}}$ pin must be driven low as soon as *either* the IOVCC or VCC voltage rail reaches the minimum levels specified in the DC Characteristics.
2. The $\overline{\text{RESET}}$ pin must then be held low until the Main Clock is stopped. The Main Clock will decay with the same profile as IOVCC.

Meeting the power-down reset conditions ensures that software will not be executed at voltage levels that may cause incorrect program execution or corruption of the flash memories. This situation must be avoided because the Main Clock decays with the IOVCC supply rather than stopping immediately when IOVCC falls below the minimum specified level.

Obsolete

The external reset circuits presented in the following sections provide varying levels of additional fault tolerance and expandability and are presented as possible examples of solutions to be used with the CP3BT10. It is important to note, however, that any design for the reset circuit and power supply must meet the timing requirements shown in Figure 5.

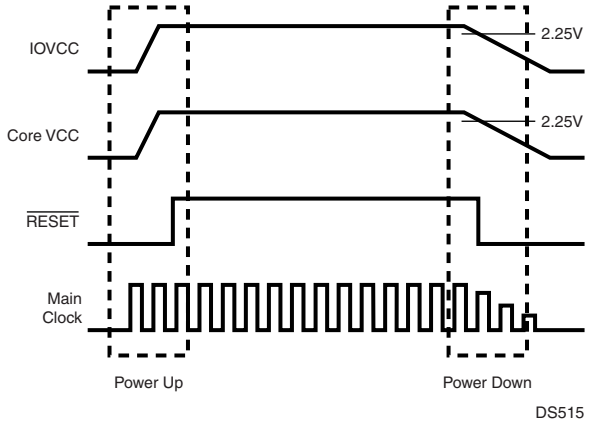

Figure 5. Power-On Reset Timing

11.7.1 Simple External Reset

A simple external reset circuit with brown-out and glitch protection based on the LM809 3-Pin Microprocessor Reset Circuit is shown in Figure 6. The LM809 produces a 240-ms logic low reset pulse when the power supply rises above a threshold voltage. Various reset thresholds are available for the LM809, however the options for 2.93V and 3.08V are most suitable for a CP3BT10 device operating from an IOVCC at 3.0V to 3.3V.

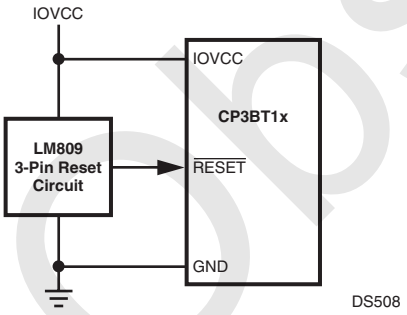

Figure 6. Simple External Reset

11.7.2 Manual and SDI External Reset

An external reset circuit based on the LM3724 5-Pin Microprocessor Reset Circuit is shown in Figure 7. The LM3724 produces a 190-ms logic low reset pulse when the power supply rises above a threshold voltage or a manual reset button is pressed. Various reset thresholds are available for the LM3724, however the option for 3.08V is most suitable for a CP3BT10 device operating from an IOVCC at 3.3V.

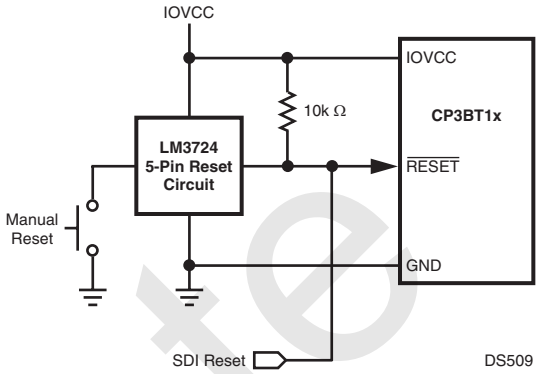

Figure 7. Manual and SDI External Reset

The LM3724 provides a debounced input for a manual pushbutton reset switch. It also has an open-drain output which can be used for implementing a wire-OR connection with a reset signal from a serial debug interface. This circuit is typical of a design to be used in a development or evaluation environment, however it is a good recommendation for all general CP3BT10 designs. If an SDI interface is not implemented, an LM3722 with active pullup may be used.

Obsolete

11.7.3 Fault-Tolerant External Reset

An external reset circuit based on the LM3710 Microprocessor Supervisory Circuit is shown in Figure 8. It provides a high level of fault tolerance in that it provides the ability to monitor both the VCC supply for the core logic and the IOVCC supply. It also provides a low-voltage indication for the IOVCC supply and an external watchdog timer.

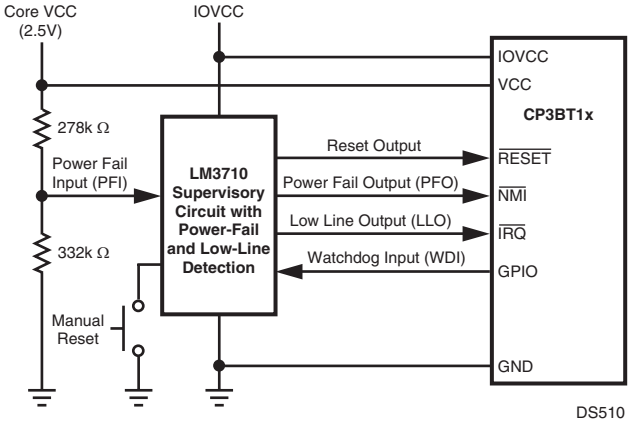

Figure 8. Fault-Tolerant External Reset

The signals shown in Figure 8 are:

- *Core VCC*—the 2.5V power supply rail for the core logic.
- *IOVCC*—the 2.5–3.3V power supply rail for the I/O logic.
- *Watchdog Input (WDI)*—this signal is asserted by the CP3BT10 at regular intervals to indicate normal operation. A general-purpose I/O (GPIO) port may be used to provide this signal. If the internal watchdog timer in the CP3BT10 is used, then the LM3704 Microprocessor Supervisory Circuit can provide the same features as the LM3710 but without the watchdog timer.
- *$\overline{RESET}$*—an active-low reset signal to the CP3BT10. The LM3710 is available in versions with active pullup or an open-drain RESET output.
- *Power-Fail Input (PFI)*—this is a voltage level derived from the Core VCC power supply rail through a simple resistor divider network.
- *Power-Fail Output (PFO)*—this signal is asserted when the voltage on PFI falls below 1.225V. PFO is connected to the non-maskable interrupt ($\overline{NMI}$) input on the CP3BT10. A system shutdown routine can then be invoked by the $\overline{NMI}$ handler.
- *Low Line Output (LLO)*—this signal is asserted when the main IOVCC level fails below a warning threshold voltage but remains above a reset detection threshold. This signal may be routed to the $\overline{NMI}$ input on the CP3BT10 or to a separate interrupt input.

These additional status and feedback mechanisms allow the CP3BT10 to recover from software hangs or perform system shutdown functions before being placed into reset.

The standard reset threshold for the LM3710 is 3.08V with other options for different watchdog timeout and reset timeouts. The selection of these values are much more application-specific. The combination of a watchdog timeout period of 1600 ms and a reset period of 200 ms is a reasonable starting point.

11.8 CLOCK AND RESET REGISTERS

Table 25 lists the clock and reset registers.

Table 25 Clock and Reset Registers

Name	Address	Description
CRCTRL	FF FC40h	Clock and Reset Control Register
PRSFC	FF FC42h	High Frequency Clock Prescaler Register
PRSSC	FF FC44h	Low Frequency Clock Prescaler Register
PRSAC	FF FC46h	Auxiliary Clock Prescaler Register

11.8.1 Clock and Reset Control Register (CRCTRL)

The CRCTRL register is a byte-wide read/write register that controls the clock selection and contains the power-on reset status bit. At reset, the CRCTRL register is initialized as described below:

7	6	5	4	3	2	1	0
Reserved		POR	ACE2	ACE1	PLLPWD	FCLK	SCLK

SCLK — The Slow Clock Select bit controls the clock source used for the Slow Clock.
0 – Slow Clock driven by prescaled Main Clock.
1 – Slow Clock driven by 32.768 kHz oscillator.

FCLK — The Fast Clock Select bit selects between the 12 MHz Main Clock and the PLL as the source used for the System Clock. After reset, the Main Clock is selected. Attempting to switch to the PLL while the PLLPWD bit is set (PLL is turned off) is ignored. Attempting to switch to the PLL also has no effect if the PLL output clock has not stabilized.
0 – The System Clock prescaler is driven by the output of the PLL.
1 – The System Clock prescaler is driven by the 12-MHz Main Clock. This is the default after reset.

PLLPWD — The PLL Power-Down bit controls whether the PLL is active or powered down (Stop PLL signal asserted). When this bit is set, the on-chip PLL stays powered-down. Otherwise it is powered-up or it can be controlled by the Power Management Module, respectively. Before software can power-down the PLL in Active mode by setting the PLLPWD bit, the FCLK bit must be set. Attempting to set the PLLPWD bit while the FCLK bit is clear is ignored. The FCLK bit cannot be cleared until the PLL clock has stabilized. After reset this bit is set.
0 – PLL is active.
1 – PLL is powered down.

Obsolete

ACE1 When the Auxiliary Clock Enable bit is set and a stable Main Clock is provided, the Auxiliary Clock 1 prescaler is enabled and generates the first Auxiliary Clock. When the ACE1 bit is clear or the Main Clock is not stable, Auxiliary Clock 1 is stopped. Auxiliary Clock 1 is used as the clock input for the Bluetooth LLC and the audio interface. After reset this bit is clear.
0 – Auxiliary Clock 1 is stopped.
1 – Auxiliary Clock 1 is active if the Main Clock is stable.

ACE2 When the Auxiliary Clock Enable 2 bit is set and a stable Main Clock is provided, the Auxiliary Clock 2 prescaler is enabled and generates Auxiliary Clock 2. When the ACE2 bit is clear or the Main Clock is not stable, the Auxiliary Clock 2 is stopped. Auxiliary Clock 2 is used as the clock input for the CVSD/PCM transcoder. After reset this bit is clear.
0 – Auxiliary Clock 2 is stopped.
1 – Auxiliary Clock 2 is active if the Main Clock is stable.

POR Power-On-Reset - The Power-On-Reset bit is set when a power-turn-on condition has been detected. This bit can only be cleared by software, not set. Writing a 1 to this bit will be ignored, and the previous value of the bit will be unchanged.
0 – Software cleared this bit.
1 – Software has not cleared his bit since the last reset.

11.8.2 High Frequency Clock Prescaler Register (PRSFC)

The PRSFC register is a byte-wide read/write register that holds the 4-bit clock divisor used to generate the high-frequency clock. In addition, the upper three bits are used to control the operation of the PLL. The register is initialized to 4Fh at reset (except in PROG mode.)

7	6 4	3 0
Res	MODE	FCDIV

FCDIV The Fast Clock Divisor specifies the divisor used to obtain the high-frequency System Clock from the PLL or Main Clock. The divisor is (FCDIV + 1).

MODE The PLL MODE field specifies the operation mode of the on-chip PLL. After reset the MODE bits are initialized to 100b, so the PLL is configured to generate a 48-MHz clock. This register must not be modified when the System Clock is derived from the PLL Clock. The System Clock must be derived from the low-frequency oscillator clock while the MODE field is modified.

MODE2:0	Output Frequency (from 12 MHz input clock)	Description
000	Reserved	Reserved
001	Reserved	Reserved
010	Reserved	Reserved
011	36 MHz	3× Mode
100	48 MHz	4× Mode
101	60 MHz	5× Mode
110	Reserved	Reserved
111	Reserved	Reserved

11.8.3 Low Frequency Clock Prescaler Register (PRSSC)

The PRSSC register is a byte-wide read/write register that holds the clock divisor used to generate the Slow Clock from the Main Clock. The register is initialized to B6h at reset.

7 0
SCDIV

SCDIV The Slow Clock Divisor field specifies a divisor to be used when generating the Slow Clock from the Main Clock. The Main Clock is divided by a value of (2 × (SCDIV + 1)) to obtain the Slow Clock. At reset, the SCDIV register is initialized to B6h, which generates a Slow Clock rate of 32786.89 Hz. This is about 0.5% faster than a Slow Clock generated from an external 32768 Hz crystal network.

11.8.4 Auxiliary Clock Prescaler Register (PRSAC)

The PRSAC register is a byte-wide read/write register that holds the clock divisor values for prescalers used to generate the two auxiliary clocks from the Main Clock. The register is initialized to FFh at reset.

7 4	3 0
ACDIV2	ACDIV2

ACDIV1 The Auxiliary Clock Divisor 1 field specifies the divisor to be used for generating Auxiliary Clock 1 from the Main Clock. The Main Clock is divided by a value of (ACDIV1 + 1).

ACDIV2 The Auxiliary Clock Divisor 2 field specifies the divisor to be used for generating Auxiliary Clock 2 from the Main Clock. The Main Clock is divided by a value of (ACDIV2 + 1).

Obsolete

12.0 Power Management

The Power Management Module (PMM) improves the efficiency of the CP3BT10 by changing the operating mode (and therefore the power consumption) according to the required level of device activity. The device implements four power modes:

- Active
- Power Save
- Idle
- Halt

Table 26 summarizes the differences between power modes: the state of the high-frequency oscillator (on or off), the System Clock source (clock used by most modules), and the clock source used by the Timing and Watchdog Module (TWM). The high-frequency oscillator generates the 12-MHz Main Clock, and the low-frequency oscillator generates a 32.768 kHz clock. The Slow Clock can be driven by the 32.768 kHz clock or a scaled version of the Main Clock.

Table 26 Power Mode Operating Summary

Mode	High-Frequency Oscillator	System Clock	TWM Clock
Active	On	Main Clock	Slow Clock
Power Save	On or Off	Slow Clock	Slow Clock
Idle	Off	None	Slow Clock
Halt	Off	None	None

The low-frequency oscillator continues to operate in all four modes and power must be provided continuously to the device power supply pins. In Halt mode, however, Slow Clock does not toggle, and as a result, the TWM timer and Watchdog Module do not operate. In Power Save mode, the high-frequency oscillator can be turned on or off under software control, as long as the low-frequency oscillator is used to drive Slow Clock.

12.1 ACTIVE MODE

In Active mode, the high-frequency oscillator is active and generates the 12-MHz Main Clock. The 32.768 kHz oscillator is active and may be used to generate the Slow Clock. The PLL can be active or inactive, as required. Most on-chip modules are driven by the System Clock. The System Clock can be the PLL Clock after a programmable divider or the 12-MHz Main Clock. The activity of peripheral modules is controlled by their enable bits.

Power consumption can be reduced in this mode by selectively disabling modules and by executing the WAIT instruction. When the WAIT instruction is executed, the CPU stops executing new instructions until it receives an interrupt signal. After reset, the CP3BT10 is in Active Mode.

12.2 POWER SAVE MODE

In Power Save mode, Slow Clock is used as the System Clock which drives the CPU and most on-chip modules. If Slow Clock is driven by the 32.768 kHz oscillator and no on-chip module currently requires the 12-MHz Main Clock, software can disable the high-frequency oscillator to further reduce power consumption. Auxiliary Clocks 1 and 2 can be turned off under software control before switching to a reduced power mode, or they may remain active as long as Main Clock is also active. If the system does not require the PLL output clock, the PLL can be disabled. Alternatively, the Main Clock and the PLL can also be controlled by the Hardware Clock Control function, if enabled. The clock architecture is described in Section 11.0.

The Bluetooth LLC can either be switched to the 32 kHz clock internally in the module, or it remains running off Auxiliary clock 1 as long as the Main Clock and Auxiliary Clock 1 are enabled.

In Power Save mode, some modules are disabled or their operation is restricted. Other modules, including the CPU, continue to function normally, but operate at a reduced clock rate. Details of each module's activity in Power Save mode are described in each module's descriptions.

It is recommended to keep CPU activity at a minimum by executing the WAIT instruction to guarantee low power consumption in the system.

12.3 IDLE MODE

In Idle mode, the System Clock is disabled and therefore the clock is stopped to most modules of the device. The DHC and DMC bits in the PMMCR register must be set before entering this mode to disable the PLL and the high-frequency oscillator. The low-frequency oscillator remains active. The Power Management Module (PMM) and the Timing and Watchdog Module (TWM) continue to operate off the Slow Clock. Idle mode can only be entered from Active mode.

12.4 HALT MODE

In Halt mode, all the device clocks, including the System Clock, Main Clock, and Slow Clock, are disabled. The DHC and DMC bits in the PMMCR register must be set before entering this mode. The high-frequency oscillator and PLL are off. The low-frequency oscillator continues to operate, however its circuitry is optimized to guarantee lowest possible power consumption. This mode allows the device to reach the absolute minimum power consumption without losing its state (memory, registers, etc.). Halt mode can only be entered from Active mode.

12.5 HARDWARE CLOCK CONTROL

The Hardware Clock Control (HCC) mechanism gives the Bluetooth Lower Link Controller (LLC) individual control over the high-frequency oscillator and the PLL. The Bluetooth LLC can enter a Sleep mode for a specified number of low-frequency clock cycles. While the Bluetooth LLC is in Sleep mode and the CP3BT10 is in Power Savemode, the HCC mechanism may be used to control whether the high-frequency oscillator, PLL, or both units are disabled.

obsolete

Altogether, three mechanisms control whether the high-frequency oscillator is active, and four mechanisms control whether the PLL is active:

- **HCC Bits:** The HCCM and HCCH bits in the PMMCR register may be used to disable the high-frequency oscillator and PLL, respectively, in Power Save mode when the Bluetooth LLC is in Sleep mode.
- **Disable Bits:** The DMC and DHC bits in the PMMCR register may be used to disable the high-frequency oscillator and PLL, respectively, in Power Save mode. These bits must be set in Idle and Halt mode. When used to disable the high-frequency oscillator or PLL, the DMC and DHC bits override the HCC mechanism.
- **Power Management Mode:** Halt mode disables the high-frequency oscillator and PLL. Active Mode enables them. The DMC and DHC bits and the HCC mechanism have no effect in Active or Halt mode.
- **PLL Power Down Bit:** The PLLPWD bit in the CRCTRL register can be used to disable the PLL in all modes. This bit does not affect the high-frequency oscillator.

12.6 POWER MANAGEMENT REGISTERS

Table 27 lists the power management registers.

Table 27 Power Management Registers

Name	Address	Description
PMMCR	FF FC60h	Power Management Control Register
PMMSR	FF FC62h	Power Management Status Register

12.6.1 Power Management Control Register (PMMCR)

The Power Management Control/Status Register (PMMCR) is a byte-wide, read/write register that controls the operating power mode (Active, Power Save, Idle, or Halt) and enables or disables the high-frequency oscillator and PLL in the Power Save mode. At reset, the non-reserved bits of this register are cleared. The format of the register is shown below.

7	6	5	4	3	2	1	0
HCCH	HCCM	DHC	DMC	WBPSM	HALT	IDLE	PSM

PSM — If the Power Save Mode bit is clear and the WBPSM bit is clear, writing 1 to the PSM bit causes the device to start the switch to Power Save mode. If the WBPSM bit is set when the PSM bit is written with 1, entry into Power Save mode is delayed until execution of a WAIT instruction. The PSM bit becomes set after the switch to Power Save mode is complete. The PSM bit can be cleared by software, and it can be cleared by hardware when a hardware wake-up event is detected.
0 – Device is not in Power Save mode.
1 – Device is in Power Save mode.

IDLE — The Idle Mode bit indicates whether the device has entered Idle mode. The WBPSM bit must be set to enter Idle mode. When the IDLE bit is written with 1, the device enters IDLE mode at the execution of the next WAIT instruction. The IDLE bit can be set and cleared by software. It is also cleared by the hardware when a hardware wake-up event is detected.
0 – Device is not in Idle mode.
1 – Device is in Idle mode.

HALT — The Halt Mode bit indicates whether the device is in Halt mode. Before entering Halt mode, the WBPSM bit must be set. When the HALT bit is written with 1, the device enters the Halt mode at the execution of the next WAIT instruction. When in HALT mode, the PMM stops the System Clock and then turns off the PLL and the high-frequency oscillator. The HALT bit can be set and cleared by software. The Halt mode is exited by a hardware wake-up event. When this signal is set high, the oscillator is started. After the oscillator has stabilized, the HALT bit is cleared by the hardware.
0 – Device is not in Halt mode.
1 – Device is in Halt mode.

WBPSM — When the Wait Before Power Save Mode bit is clear, a switch from Active mode to Power Save mode only requires setting the PSM bit. When the WBPSM bit is set, a switch from Active mode to Power Save, Idle, or Halt mode is performed by setting the PSM, IDLE, or HALT bit, respectively, and then executing a WAIT instruction. Also, if the DMC or DHC bits are set, the high-frequency oscillator and PLL may be disabled only after a WAIT instruction is executed and the Power Save, Idle, or Halt mode is entered.
0 – Mode transitions may occur immediately.
1 – Mode transitions are delayed until the next WAIT instruction is executed.

DMC — The Disable Main Clock bit may be used to disable the high-frequency oscillator in Power Save mode. In Active mode, the high-frequency oscillator is enabled without regard to the DMC value. The DMC bit is cleared by hardware when a hardware wake-up event is detected. This bit must be set in Idle and Halt modes.
0 – High-frequency oscillator is not disabled in Power Save mode, unless disabled by the HCC mechanism.
1 – High-frequency oscillator is disabled in Power Save mode.

DHC — The Disable High-Frequency (PLL) Clock bit and may be used to disable the PLL in Power Save modes. When the DHC bit is clear (and PLLPWD = 0), the PLL is enabled in Power Save mode. If the DHC bit is set, the PLL is disabled in Power Save mode. The DHC bit is cleared by hardware when a hardware wake-

Obsolete

up event is detected. This bit must be set in Idle and Halt modes.

0 — PLL is not disabled in Power Save mode, unless disabled by the HCC mechanism or the PLLPWD bit.

1 — PLL is disabled in Power Save mode.

HCCM The Hardware Clock Control for Main Clock bit may be used in Power Save and Idle modes to disable the high-frequency oscillator conditionally, depending on whether the Bluetooth LLC is in Sleep mode. The DMC bit must be clear for this mechanism to operate. The HCCM bit is automatically cleared when the device enters Active mode.

0 — High-frequency oscillator is disabled in Power Save or Idle mode only if the DMC bit is set.

1 — High-frequency oscillator is also disabled if the Bluetooth LLC is idle.

HCCH The Hardware Clock Control for High-Frequency (PLL) bit may be used in Power Save and Idle modes to disable the PLL conditionally, depending on whether the Bluetooth LLC is in Sleep mode. The DHC bit and the CRCTRL.PLLPWD bit must be clear for this mechanism to operate. The HCCH bit is automatically cleared when the device enters Active mode.

0 — PLL is disabled in Power Save or Idle mode only if the DMC bit or the CRCTRL.PLLPWD bit is set.

1 — PLL is also disabled if the Bluetooth LLC is idle.

12.6.2 Power Management Status Register (PMMSR)

The Management Status Register (PMMR) is a byte-wide, read/write register that provides status signals for the various clocks. The reset value of PMSR register bits 0 to 2 depend on the status of the clock sources monitored by the PMM. The upper 5 bits are clear after reset. The format of the register is shown below.

7 — 3	2	1	0
Reserved	OHC	OMC	OLC

OLC The Oscillating Low Frequency Clock bit indicates whether the low-frequency oscillator is producing a stable clock. When the low-frequency oscillator is unavailable, the PMM will not switch to Power Save, Idle, or Halt mode.

0 — Low-frequency oscillator is unstable, disabled, or not oscillating.

1 — Low-frequency oscillator is available.

OMC The Oscillating Main Clock bit indicates whether the high-frequency oscillator is producing a stable clock. When the high-frequency oscillator is unavailable, the PMM will not switch to Active mode.

0 — High-frequency oscillator is unstable, disabled, or not oscillating.

1 — High-frequency oscillator is available.

OHC The Oscillating High Frequency (PLL) Clock bit indicates whether the PLL is producing a stable clock. Because the PMM tests the stability of the PLL clock to qualify power mode state transitions, a stable clock is indicated when the PLL is disabled. This removes the stability of the PLL clock from the test when the PLL is disabled. When the PLL is enabled but unstable, the PMM will not switch to Active mode.

0 — PLL is enabled but unstable.

1 — PLL is stable or disabled (CRCTRL.PLLPWD = 0).

12.7 SWITCHING BETWEEN POWER MODES

Switching from a higher to a lower power consumption mode is performed by writing an appropriate value to the Power Management Control/Status Register (PMMCR). Switching from a lower power consumption mode to the Active mode is usually triggered by a hardware interrupt. Figure 9 shows the four power consumption modes and the events that trigger a transition from one mode to another.

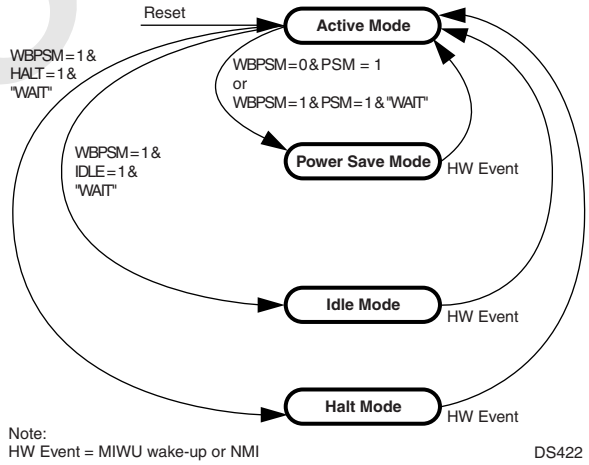

Figure 9. Power Mode State Diagram

Some of the power-up transitions are based on the occurrence of a wake-up event. An event of this type can be either a maskable interrupt or a non-maskable interrupt (NMI). All of the maskable hardware wake-up events are monitored by the Multi-Input Wake-Up (MIWU) Module, which is active in all modes. Once a wake-up event is detected, it is latched until an interrupt acknowledge cycle occurs or a reset is applied.

A wake-up event causes a transition to the Active mode and restores normal clock operation, but does not start execution of the program. It is the interrupt handler associated

Obsolete

with the wake-up source (MIWU or NMI) that causes program execution to resume.

12.7.1 Active Mode to Power Save Mode

A transition from Active mode to Power Save mode is performed by writing a 1 to the PMMCR.PSM bit. The transition to Power Save mode is either initiated immediately or at execution of the next WAIT instruction, depending on the state of the PMMCR.WBPSM bit.

For an immediate transition to Power Save mode (PMMCR.WBPSM = 0), the CPU continues to operate using the low-frequency clock. The PMMCR.PSM bit becomes set when the transition to the Power Save mode is completed.

For a transition at the next WAIT instruction (PMMCR.WBPSM = 1), the CPU continues to operate in Active mode until it executes a WAIT instruction. At execution of the WAIT instruction, the device enters the Power Save mode, and the CPU waits for the next interrupt event. In this case, the PMMCR.PSM bit becomes set when it is written, even before the WAIT instruction is executed.

12.7.2 Entering Idle Mode

Entry into Idle mode is performed by writing a 1 to the PMMCR.IDLE bit and then executing a WAIT instruction. The PMMCR.WBPSM bit must be set before the WAIT instruction is executed. Idle mode can be entered only from the Active mode. The DHC and DMC bits must be set when entering Idle mode.

12.7.3 Disabling the High-Frequency Clock

When the low-frequency oscillator is used to generate the Slow Clock, power consumption can be reduced further in the Power Save mode by disabling the high-frequency oscillator. This is accomplished by writing a 1 to the PMMCR.DHC bit before executing the WAIT instruction that puts the device in the Power Save mode. The high-frequency clock is turned off only after the device enters the Power Save mode.

The CPU operates on the low-frequency clock in Power Save mode. It can turn off the high-frequency clock at any time by writing a 1 to the PMMCR.DHC bit. The high-frequency oscillator is always enabled in Active mode and always disabled in Halt mode, without regard to the PMMCR.DHC bit setting.

Immediately after power-up and entry into Active mode, software must wait for the low-frequency clock to become stable before it can put the device in Power Save mode. It should monitor the PMMSR.OLC bit for this purpose. Once this bit is set, Slow Clock is stable and Power Save mode can be entered.

12.7.4 Entering Halt Mode

Entry into Halt mode is accomplished by writing a 1 to the PMMCR.HALT bit and then executing a WAIT instruction. The PMMCR.WBPSM bit must be set before the WAIT instruction is executed. Halt mode can be entered only from Active mode. The DHC and DMC bits must be set when entering Idle mode.

12.7.5 Software-Controlled Transition to Active Mode

A transition from Power Save mode to Active mode can be accomplished by either a software command or a hardware wake-up event. The software method is to write a 0 to the PMMCR.PSM bit. The value of the register bit changes only after the transition to the Active mode is completed.

If the high-frequency oscillator is disabled for Power Save operation, the oscillator must be enabled and allowed to stabilize before the transition to Active mode. To enable the high-frequency oscillator, software writes a 0 to the PMMCR.DMC bit. Before writing a 0 to the PMMCR.PSM bit, software must first monitor the PMMSR.OMC bit to determine when the oscillator has stabilized.

12.7.6 Wake-Up Transition to Active Mode

A hardware wake-up event switches the device directly from Power Save, Idle, or Halt mode to Active mode. Hardware wake-up events are:

- Non-Maskable Interrupt (NMI)
- Valid wake-up event on a Multi-Input Wake-Up channel

When a wake-up event occurs, the on-chip hardware performs the following steps:

1. Clears the PMMCR.DMC bit, which enables the high-frequency clock (if it was disabled).
2. Waits for the PMMSR.OMC bit to become set, which indicates that the high-frequency clock is operating and is stable.
3. Clears the PMMCR.DHC bit, which enables the PLL.
4. Waits for the PMMSR.OHC bit to become set.
5. Switches the device into Active mode.

12.7.7 Power Mode Switching Protection

The Power Management Module has several mechanisms to protect the device from malfunctions caused by missing or unstable clock signals.

The PMMSR.OHC, PMMSR.OMC, and PMMSR.OLC bits indicate the current status of the PLL, high-frequency oscillator, and low-frequency oscillator, respectively. Software can check the appropriate bit before switching to a power mode that requires the clock. A set status bit indicates an operating, stable clock. A clear status bit indicates a clock that is disabled, not available, or not yet stable. (Except in the case of the PLL, which has a set status bit when disabled.)

During a power mode transition, if there is a request to switch to a mode with a clear status bit, the switch is delayed until that bit is set by the hardware.

When the system is built without an external crystal network for the low-frequency clock, Main Clock is divided by a prescaler factor to produce the low-frequency clock. In this situation, Main Clock is disabled only in the Idle and Halt modes, and cannot be disabled for the Power Save mode.

Without an external crystal network for the low-frequency clock, the device comes out of Halt or Idle mode and enters Active mode with Main Clock driving Slow Clock.

Note: For correct operation in the absence of a low-frequency crystal, X2CKI must be tied low (not left floating) so that the hardware can detect the absence of the crystal.

Obsolete

13.0 Multi-Input Wake-Up

The Multi-Input Wake-Up Unit (MIWU) monitors its 16 input channels for a software-selectable trigger condition. On detection of a trigger condition, the module generates an interrupt request and if enabled, a wake-up request. A wake-up request can be used by the power management unit to exit the Halt, Idle, or Power Save mode and return to the active mode. An interrupt request generates an interrupt to the CPU (interrupt IRQ2–IRQ5), which allows an interrupt handler to respond to MIWU events.

The wake-up event only activates the clocks and CPU, but does not by itself initiate execution of any code. It is the interrupt request associated with the MIWU that gets the CPU to start executing code, by jumping to the corresponding interrupt handler. Therefore, setting up the MIWU interrupt handler is essential for any wake-up operation.

There are four interrupt requests that can be routed to the ICU as shown in Figure 10. Each of the 16 MIWU channels can be programmed to activate one of these four interrupt requests.

The MIWU channels are named WUI0 through WUI15, as shown in Table 28.

Table 28 MIWU Sources

MIWU Channel	Source
WUI0	TWM-T0OUT
WUI1	ACCESS.bus
WUI2	Reserved
WUI3	$\overline{\text{MWCS}}$
WUI4	$\overline{\text{CTS}}$
WUI5	RXD
WUI6	Bluetooth LLC
WUI7	AAI SFS
WUI8	USB Wake-Up
WUI9	PI6
WUI10	PG0
WUI11	PG1
WUI12	PG2
WUI13	PG3
WUI14	PG6
WUI15	PG7

Each channel can be configured to trigger on rising or falling edges, as determined by the setting in the WKEDG register. Each trigger event is latched into the WKPND register. If a trigger event is enabled by its respective bit in the WKENA register, an active wake-up/interrupt signal is generated. Software can determine which channel has generated the active signal by reading the WKPND register.

The MIWU is active at all times, including the Halt mode. All device clocks are stopped in this mode. Therefore, detecting an external trigger condition and the subsequent setting of the pending bit are not synchronous to the System Clock.

13.1 MULTI-INPUT WAKE-UP REGISTERS

Table 29 lists the MIWU unit registers.

Table 29 Multi-Input Wake-Up Registers

Name	Address	Description
WKEDG	FF FC80h	Wake-Up Edge Detection Register
WKENA	FF FC82h	Wake-Up Enable Register
WKIENA	FF FC8Ch	Wake-Up Interrupt Enable Register
WKICTL1	FF FC84h	Wake-Up Interrupt Control Register 1
WKICTL2	FF FC86h	Wake-Up Interrupt Control Register 2
WKPND	FF FC88h	Wake-Up Pending Register
WKPCL	FF FC8Ah	Wake-Up Pending Clear Register

13.1.1 Wake-Up Edge Detection Register (WKEDG)

The WKEDG register is a word-wide read/write register that controls the edge sensitivity of the MIWU channels. The WKEDG register is cleared upon reset, which configures all channels to be triggered on rising edges. The register format is shown below.

15	0
WKED	

WKED — The Wake-Up Edge Detection bits control the edge sensitivity for MIWU channels. The WKED15:0 bits correspond to the WUI[15:0] channels, respectively.
- 0 – Triggered on rising edge (low-to-high transition).
- 1 – Triggered on falling edge (high-to-low transition).

Obsolete

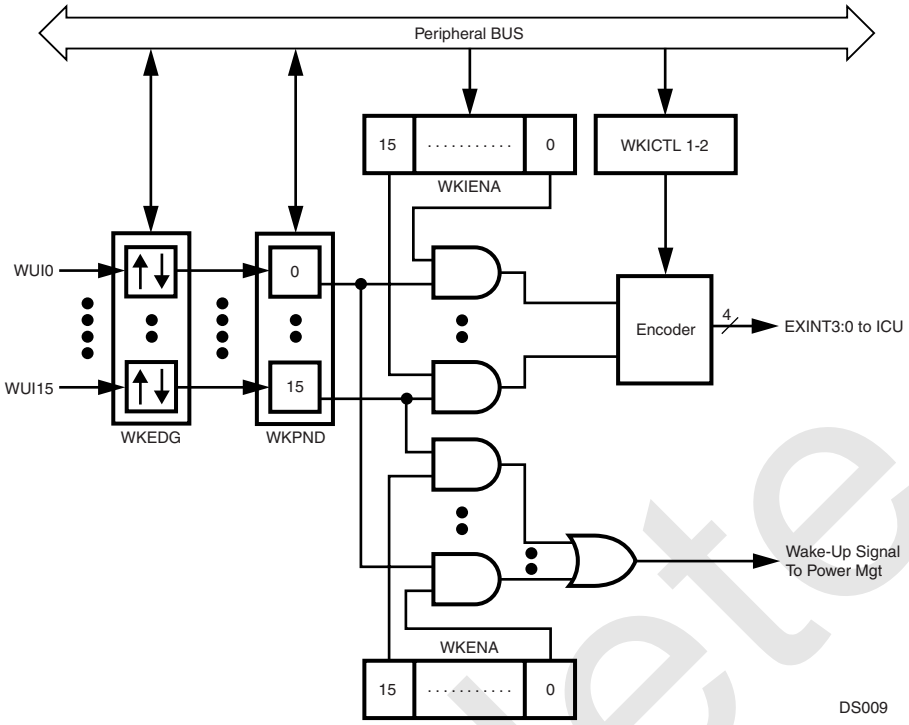

Figure 10. Multi-Input Wake-Up Module Block Diagram

13.1.2 Wake-Up Enable Register (WKENA)

The Wake-Up Enable (WKENA) register is a word-wide read/write register that individually enables or disables wake-up events from the MIWU channels. The WKENA register is cleared upon reset, which disables all wake-up/interrupt channels. The register format is shown below.

15	0
WKEN	

WKEN — The Wake-Up Enable bits enable and disable the MIWU channels. The WKEN15:0 bits correspond to the WUI15:0 channels, respectively.
0 – MIWU channel wake-up events disabled.
1 – MIWU channel wake-up events enabled.

13.1.3 Wake-Up Interrupt Enable Register (WKIENA)

The WKIENA register is a word-wide read/write register that enables and disables interrupts from the MIWU channels. The register format is shown below.

15	0
WKIEN	

WKIEN — The Wake-Up Interrupt Enable bits control whether MIWU channels generate interrupts.
0 – Interrupt disabled.
1 – Interrupt enabled.

13.1.4 Wake-Up Interrupt Control Register 1 (WKICTL1)

The WKICTL1 register is a word-wide read/write register that selects the interrupt request signal for the associated MIWU channels WUI7:0. At reset, the WKICTL1 register is cleared, which selects MIWU Interrupt Request 0 for all eight channels. The register format is shown below.

15	14	13	12	11	10	9	8	7	6	5	4	3	2	1	0
WKINTR7		WKINTR6		WKINTR5		WKINTR4		WKINTR3		WKINTR2		WKINTR1		WKINTR0	

WKINTR — The Wake-Up Interrupt Request Select fields select which of the four MIWU interrupt requests are activated for the corresponding channel.
00 – Selects MIWU interrupt request 0.
01 – Selects MIWU interrupt request 1.
10 – Selects MIWU interrupt request 2.
11 – Selects MIWU interrupt request 3.

Obsolete

13.1.5 Wake-Up Interrupt Control Register 2 (WKICTL2)

The WKICTL2 register is a word-wide read/write register that selects the interrupt request signal for the associated MIWU channels WUI15 to WUI8. At reset, the WKICTL2 register is cleared, which selects MIWU Interrupt Request 0 for all eight channels. The register format is shown below.

15	14	13	12	11	10	9	8	7	6	5	4	3	2	1	0
WKIN TR15		WKIN TR14		WKIN TR13		WKIN TR12		WKIN TR11		WKIN TR10		WKIN TR9		WKIN TR8	

WKINTR The Wake-Up Interrupt Request Select fields select which of the four MIWU interrupt requests are activated for the corresponding channel.
00 – Selects MIWU interrupt request 0.
01 – Selects MIWU interrupt request 1.
10 – Selects MIWU interrupt request 2.
11 – Selects MIWU interrupt request 3.

13.1.6 Wake-Up Pending Register (WKPND)

The WKPND register is a word-wide read/write register in which the Multi-Input Wake-Up module latches any detected trigger conditions. The CPU can only write a 1 to any bit position in this register. If the CPU attempts to write a 0, it has no effect on that bit. To clear a bit in this register, the CPU must use the WKPCL register. This implementation prevents a potential hardware-software conflict during a read-modify-write operation on the WKPND register.

This register is cleared upon reset. The register format is shown below.

15	0
WKPD	

WKPD The Wake-Up Pending bits indicate which MIWU channels have been triggered. The WKPD[15:0] bits correspond to the WUI[15:0] channels. Writing 1 to a bit sets it.
0 – Trigger condition did not occur.
1 – Trigger condition occurred.

13.1.7 Wake-Up Pending Clear Register (WKPCL)

The Wake-Up Pending Clear (WKPCL) register is a word-wide write-only register that lets the CPU clear bits in the WKPND register. Writing a 1 to a bit position in the WKPCL register clears the corresponding bit in the WKPND register. Writing a 0 has no effect. Do not modify this register with instructions that access the register as a read-modify-write operand, such as the bit manipulation instructions.

Reading this register location returns undefined data. Therefore, do not use a read-modify-write sequence (such as the SBIT instruction) to set individual bits. Do not attempt to read the register, then perform a logical OR on the register value. Instead, write the mask directly to the register address. The register format is shown below.

15	0
WKCL	

WKCL Writing 1 to a bit clears it.
0 – Writing 0 has no effect.
1 – Writing 1 clears the corresponding bit in the WKPD register.

13.2 PROGRAMMING PROCEDURES

To set up and use the Multi-Input Wake-Up function, use the following procedure. Performing the steps in the order shown will prevent false triggering of a wake-up condition. This same procedure should be used following a reset because the wake-up inputs are left floating, resulting in unknown data on the input pins.

1. Clear the WKENA register to disable the MIWU channels.
2. Write the WKEDG register to select the desired type of edge sensitivity (clear for rising edge, set for falling edge).
3. Set all bits in the WKPCL register to clear any pending bits in the WKPND register.
4. Set up the WKICTL1 and WKICTL2 registers to define the interrupt request signal used for each channel.
5. Set the bits in the WKENA register corresponding to the wake-up channels to be activated.

To change the edge sensitivity of a wake-up channel, use the following procedure. Performing the steps in the order shown will prevent false triggering of a wake-up/interrupt condition.

1. Clear the WKENA bit associated with the input to be reprogrammed.
2. Write the new value to the corresponding bit position in the WKEDG register to reprogram the edge sensitivity of the input.
3. Set the corresponding bit in the WKPCL register to clear the pending bit in the WKPND register.
4. Set the same WKENA bit to re-enable the wake-up function.

Obsolete

14.0 Input/Output Ports

Each device has up to 40 software-configurable I/O pins, organized into five 8-bit ports. The ports are named Port B, Port C, Port G, Port H, and Port I.

In addition to their general-purpose I/O capability, the I/O pins of Ports G, H, and I have alternate functions for use with on-chip peripheral modules such as the UART or the Multi-Input Wake-Up module. The alternate functions of all I/O pins are shown in Table 2.

Ports B and C are used as the 16-bit data bus when an external bus is enabled (100-pin devices only). This alternate function is selected by enabling the DEV or ERE operating environments, not by programming the port registers.

The I/O pin characteristics are fully programmable. Each pin can be configured to operate as a TRI-STATE output, push-pull output, weak pull-up input, or high-impedance input. Different pins within the same port can be individually configured to operate in different modes.

Figure 11 is a diagram showing the I/O port pin logic. The register bits, multiplexers, and buffers allow the port pin to be configured into the various operating modes.The output buffer is a TRI-STATE buffer with weak pull-up capability. The weak pull-up, if used, prevents the port pin from going to an undefined state when it operates as an input.

To reduce power consumption, input buffers configured for general-purpose I/O are only enabled when they are read. When configured for an alternate function, the input buffers are enabled continuously. To minimize power consumption, input signals to enabled buffers must be held within 0.2 volts of the VCC or GND voltage.

The electrical characteristics and drive capabilities of the input and output buffers are described in Section 27.0.

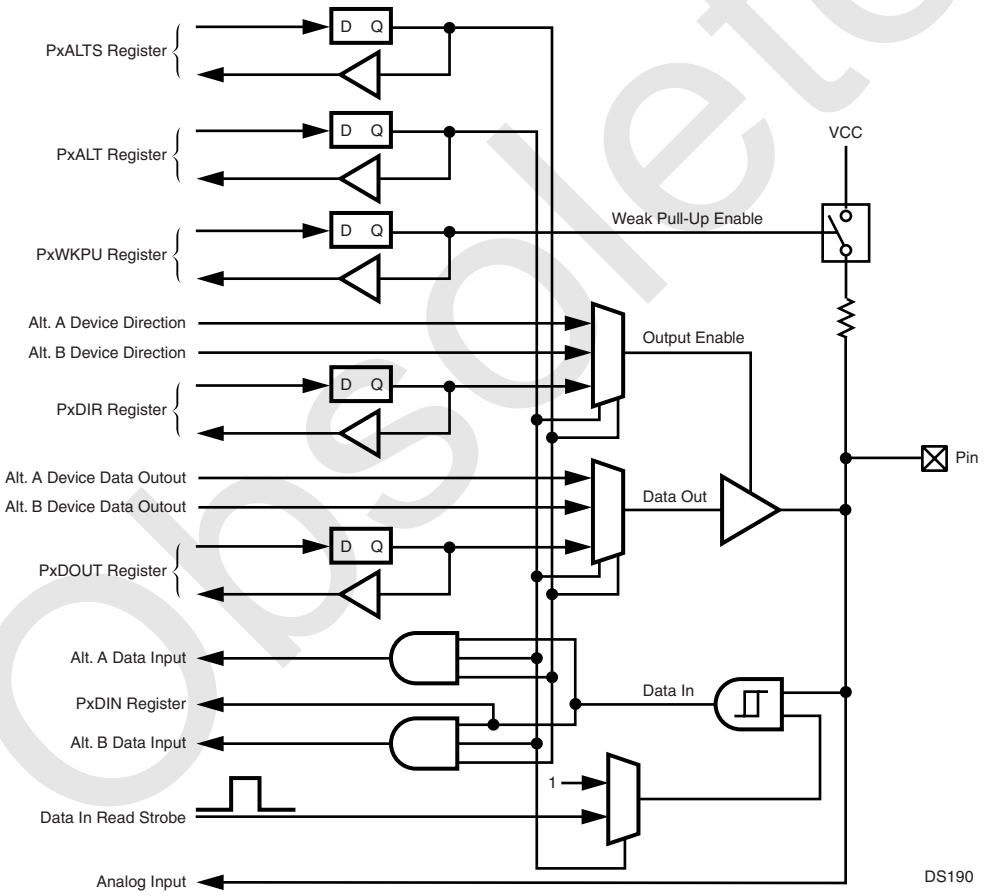

Figure 11. I/O Port Pin Logic

14.1 PORT REGISTERS

Each port has an associated set of memory-mapped registers used for controlling the port and for holding the port data:

- PxALT: Port alternate function register
- PxALTS: Port alternate function select register
- PxDIR: Port direction register
- PxDIN: Port data input register
- PxDOUT: Port data output register
- PxWPU: Port weak pull-up register
- PxHDRV: Port high drive strength register

Obsolete

Table 30 Port Registers

Name	Address	Description
PBALT	FF FB00h	Port B Alternate Function Register
PBDIR	FF FB02h	Port B Direction Register
PBDIN	FF FB04h	Port B Data Input Register
PBDOUT	FF FB06h	Port B Data Output Register
PBWPU	FF FB08h	Port B Weak Pull-Up Register
PBHDRV	FF FB0Ah	Port B High Drive Strength Register
PBALTS	FF FB0Ch	Port B Alternate Function Select Register
PCALT	FF FB10h	Port C Alternate Function Register
PCDIR	FF FB12h	Port C Direction Register
PCDIN	FF FB14h	Port C Data Input Register
PCDOUT	FF FB16h	Port C Data Output Register
PCWPU	FF FB18h	Port C Weak Pull-Up Register
PCHDRV	FF FB1Ah	Port C High Drive Strength Register
PCALTS	FF FB1Ch	Port C Alternate Function Select Register
PGALT	FF FCA0h	Port G Alternate Function Register
PGDIR	FF FCA2h	Port G Direction Register
PGDIN	FF FCA4h	Port G Data Input Register
PGDOUT	FF FCA6h	Port G Data Output Register
PGWPU	FF FCA8h	Port G Weak Pull-Up Register
PGHDRV	FF FCAAh	Port G High Drive Strength Register
PGALTS	FF FCACh	Port G Alternate Function Select Register

Table 30 Port Registers

Name	Address	Description
PHALT	FF FCC0h	Port H Alternate Function Register
PHDIR	FF FCC2h	Port H Direction Register
PHDIN	FF FCC4h	Port H Data Input Register
PHDOUT	FF FCC6h	Port H Data Output Register
PHWPU	FF FCC8h	Port H Weak Pull-Up Register
PHHDRV	FF FCCAh	Port H High Drive Strength Register
PHALTS	FF FCCCh	Port H Alternate Function Select Register
PIALT	FF FEE0h	Port I Alternate Function Register
PIDIR	FF FEE2h	Port I Direction Register
PIDIN	FF FEE4h	Port I Data Input Register
PIDOUT	FF FEE6h	Port I Data Output Register
PIWPU	FF FEE8h	Port I Weak Pull-Up Register
PIHDRV	FF FEEAh	Port I High Drive Strength Register
PIALTS	FF FEECh	Port I Alternate Function Select Register

In the descriptions of the ports and port registers, the lowercase letter “x” represents the port designation, either B, C, G, H, or I. For example, “PxDIR register” means any one of the port direction registers: PBDIR, PCDIR, PGDIR, PHDIR, or PIDIR.

All of the port registers are byte-wide read/write registers, except for the port data input registers, which are read-only registers. Each register bit controls the function of the corresponding port pin. For example, PGDIR.2 (bit 2 of the PGDIR register) controls the direction of port pin PG2.

Obsolete

14.1.1 Port Alternate Function Register (PxALT)

The PxALT registers control whether the port pins are used for general-purpose I/O or for their alternate function. Each port pin can be controlled independently.

A clear bit in the alternate function register causes the corresponding pin to be used for general-purpose I/O. In this configuration, the output buffer is controlled by the direction register (PxDIR) and the data output register (PxDOUT). The input buffer is visible to software as the data input register (PxDIN).

A set bit in the alternate function register (PxALT) causes the corresponding pin to be used for its peripheral I/O function. When the alternate function is selected, the output buffer data and TRI-STATE configuration are controlled by signals from the on-chip peripheral device.

A reset operation clears the port alternate function registers, which initializes the pins as general-purpose I/O ports. This register must be enabled before the corresponding alternate function is enabled.

7							0
PxALT							

PxALT — The PxALT bits control whether the corresponding port pins are general-purpose I/O ports or are used for their alternate function by an on-chip peripheral.
0 — General-purpose I/O selected.
1 — Alternate function selected.

14.1.2 Port Direction Register (PxDIR)

The port direction register (PxDIR) determines whether each port pin is used for input or for output. A clear bit in this register causes the corresponding pin to operate as an input, which puts the output buffer in the high-impedance state. A set bit causes the pin to operate as an output, which enables the output buffer.

A reset operation clears the port direction registers, which initializes the pins as inputs.

7							0
PxDIR							

PxDIR — The PxDIR bits select the direction of the corresponding port pin.
0 — Input.
1 — Output.

14.1.3 Port Data Input Register (PxDIN)

The data input register (PxDIN) is a read-only register that returns the current state on each port pin. The CPU can read this register at any time even when the pin is configured as an output.

7							0
PxDIN							

PxDIN — The PxDIN bits indicate the state on the corresponding port pin.
0 — Pin is low.
1 — Pin is high.

14.1.4 Port Data Output Register (PxDOUT)

The data output register (PxDOUT) holds the data to be driven on output port pins. In this configuration, writing to the register changes the output value. Reading the register returns the last value written to the register.

A reset operation leaves the register contents unchanged. At power-up, the PxDOUT registers contain unknown values.

7							0
PxDOUT							

PxDOUT — The PxDOUT bits hold the data to be driven on pins configured as outputs in general-purpose I/O mode.
0 — Drive the pin low.
1 — Drive the pin high.

14.1.5 Port Weak Pull-Up Register (PxWPU)

The weak pull-up register (PxWPU) determines whether the port pins have a weak pull-up on the output buffer. The pull-up device, if enabled by the register bit, operates in the general-purpose I/O mode whenever the port output buffer is disabled. In the alternate function mode, the pull-ups are always disabled.

A reset operation clears the port weak pull-up registers, which disables all pull-ups.

7							0
PxWPU							

PxWPU — The PxWPU bits control whether the weak pull-up is enabled.
0 — Weak pull-up disabled.
1 — Weak pull-up enabled.

Obsolete

14.1.6 Port High Drive Strength Register (PxHDRV)

The PxHDRV register is a byte-wide, read/write register that controls the slew rate of the corresponding pins. The high drive strength function is enabled when the corresponding bits of the PxHDRV register are set. In both GPIO and alternate function modes, the drive strength function is enabled by the PxHDRV registers. At reset, the PxHDRV registers are cleared, making the ports low speed.

7	0
PxHDRV	

PxHDRV — The PxHDRV bits control whether output pins are driven with slow or fast slew rate.
0 – Slow slew rate.
1 – Fast slew rate.

14.1.7 Port Alternate Function Select Register (PxALTS)

The PxALTS register selects which of two alternate functions are selected for the port pin. These bits are ignored unless the corresponding PxALT bits are set. Each port pin can be controlled independently.

7	0
PxALTS	

PxALTS — The PxALTS bits select among two alternate functions. Table 31 shows the mapping of the PxALTS bits to the alternate functions. Unused PxALTS bits must be clear.

Table 31 Alternate Function Select

Port Pin	PxALTS = 0	PxALTS = 1
PG0	RXD	WUI10
PG1	TXD	WUI11
PG2	$\overline{\text{RTS}}$	WUI12
PG3	$\overline{\text{CTS}}$	WUI13
PG4	Reserved	TB
PG5	SRFS	$\overline{\text{NMI}}$
PG6	Reserved	WUI14
PG7	Reserved	WUI15
PH0	MSK	TIO1
PH1	MDIDO	TIO2
PH2	MDODI	TIO3
PH3	$\overline{\text{MWCS}}$	TIO4
PH4	SCK	TIO5
PH5	SFS	TIO6
PH6	STD	TIO7
PH7	SRD	TIO8
PI0	RFSYNC	Reserved
PI1	RFCE	Reserved
PI2	BTSEQ1	SRCLK
PI3	SCLK	Reserved
PI4	SDAT	Reserved
PI5	$\overline{\text{SLE}}$	Reserved
PI6	WUI9	BTSEQ2
PI7	TA	BTSEQ3

14.2 OPEN-DRAIN OPERATION

A port pin can be configured to operate as an inverting open-drain output buffer. To do this, the CPU must clear the bit in the data output register (PxDOUT) and then use the port direction register (PxDIR) to set the value of the port pin. With the direction register bit set (direction = out), the value zero is forced on the pin. With the direction register bit clear (direction = in), the pin is placed in the TRI-STATE mode. If desired, the internal weak pull-up can be enabled to pull the signal high when the output buffer is in TRI-STATE mode.

Obsolete

15.0 Bluetooth Controller

The integrated hardware Bluetooth Lower Link Controller (LLC) complies to the Bluetooth Specification Version 1.1 and integrates the following functions:

- 4.5K-byte dedicated Bluetooth data RAM
- 1K-byte dedicated Bluetooth Sequencer RAM
- Support of all Bluetooth 1.1 packet types
- Support for fast frequency hopping of 1600 hops/s
- Access code correlation and slot timing recovery circuit
- Power Management Control Logic
- BlueRF-compatible interface to connect with National's LMX5252 and other RF transceiver chips

For a detailed description of the interface to the LMX5252, consult the LMX5252 data sheet which is available from the National Semiconductor wireless group. National provides software libraries for using the Bluetooth LLC. Documentation for the software libraries is also available from National Semiconductor.

15.1 RF INTERFACE

The CP3BT10 interfaces to the LMX5251 or LMX5252 radio chips though the RF interface.

Figure 12 shows the interface between the CP3BT10 and the LMX5251 radio chip.

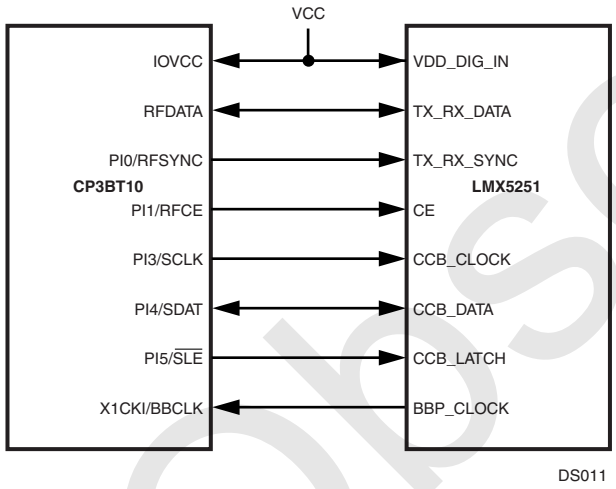

Figure 12. LMX5251 Interface

Figure 13 shows the interface between the CP3BT10 and the LMX5252 radio chip.

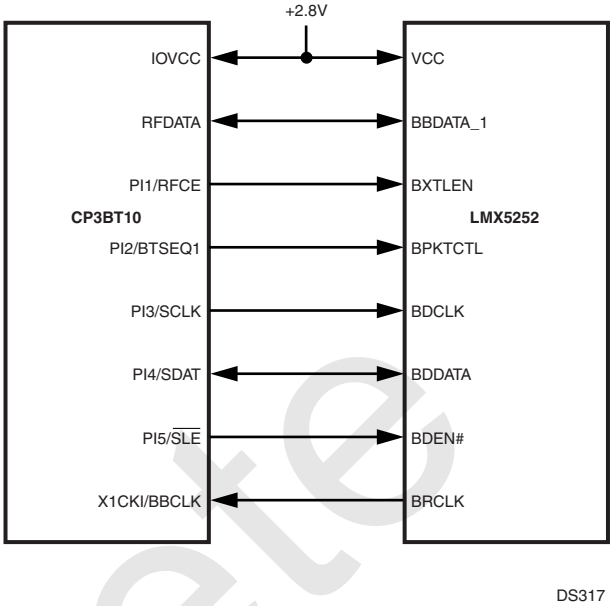

Figure 13. LMX5252 Interface

The CP3BT10 implements a BlueRF-compatible interface, which may be used with other RF transceiver chips.

15.1.1 RF Interface Signals

The RF interface signals are grouped as follows:

- Modem Signals (BBCLK, RFDATA, and RFSYNC)
- Control Signal (RFCE)
- Serial Interface Signals (SCLK, SDAT, and $\overline{SLE}$)
- Bluetooth Sequencer Status Signals (BTSEQ1, BTSEQ2, and BTSEQ2)

X1CKI/BBCLK

The X1CKI/BBCLK pin is the input signal for the 12-MHz clock signal. The radio chip uses this signal internally as the 12× oversampling clock and provides it externally to the CP3BT10 for use as the Main Clock.

RFDATA

The RFDATA signal is the multiplexed Bluetooth data receive and transmit signal. The data is provided at a bit rate of 1Mbit/s with 12× oversampling, synchronized to the 12 MHz BBCLK. The RFDATA signal is a dedicated RF interface pin. This signal is driven to a logic high level after reset.

RFSYNC

In receive mode (data direction from the radio chip to the CP3BT10), the RFSYNC signal acts as the frequency correction/DC compensation circuit control output to the radio chip. The RFSYNC signal is driven low throughout the correlation phase and driven high when synchronization to the received access code is achieved.

In transmit mode (data direction from the CP3BT10 to the radio chip), the RFSYNC signal enables the RF output of the radio chip. When the RFSYNC pin is driven high, the RF transmitter circuit of the radio chip is enabled, correspond-

Obsolete

ing to the settings of the power control register in the radio chip.

The RFSYNC signal is the alternate function of the general-purpose I/O pin PI0. At reset, this pin is in TRI-STATE mode. Software must enable the alternate function of the PI0 pin to give control over this signal to the RF interface.

RFCE

The RFCE signal is the chip enable output to the external RF chip. When the RFCE signal is driven high, the RF chip power is controlled by the settings of its power control registers. When the RFCE signal is driven low, the RF chip is powered-down. However, the serial interface is still operational and the CP3BT10 can still access the RF chip internal control registers.

The RFCE signal is the alternate function of the general-purpose I/O pin PI1. At reset, this pin is in TRI-STATE mode. Software must enable the alternate function of the PI1 pin to give control over this signal to the RF interface.

During Bluetooth power-down phases, the CP3BT10 provides a mechanism to reduce the power consumption of an external RF chip by driving the RFCE signal of the RF interface to a logic low level. This feature is available when the Power Management Module of the CP3BT10 has enabled the Hardware Clock Control mechanism.

SCLK

The SCLK signal is the serial interface shift clock output. The CP3BT10 always acts as the master of the serial interface and therefore always provides the shift clock. The SCLK signal is the alternate function of the general-purpose I/O pin PI3. At reset, this pin is in TRI-STATE mode. Software must enable the alternate function of the PI3 pin to give control over this signal to the RF interface.

SDAT

The SDAT signal is the multiplexed serial data receive and transmit path between the radio chip and the CP3BT10.

The SDAT signal is the alternate function of the general-purpose I/O pin PI4. At reset, this pin is in TRI-STATE mode. Software must enable the alternate function of the PI4 pin to give control over this signal to the RF interface.

$\overline{\text{SLE}}$

The $\overline{\text{SLE}}$ pin is the serial load enable output of the serial interface of the CP3BT10.

During write operations (to the radio chip registers), the data received by the shift register of the radio chip is copied into the address register on the next rising edge of SCLK after the $\overline{\text{SLE}}$ signal goes high.

During read operations (read from the registers), the radio chip releases the SDAT line on the next rising edge of SCLK after the $\overline{\text{SLE}}$ signal goes high.

$\overline{\text{SLE}}$ is the alternate function of the general-purpose I/O pin PI5. At reset, this pin is in TRI-STATE mode. Software must enable the alternate function of the PI5 pin to give control over this signal to the RF interface.

BTSEQ[3:1]

The BTSEQ[3:1] signals indicate internal states of the Bluetooth sequencer, which are used for interfacing to some external devices.

15.2 SERIAL INTERFACE

The radio chip register set can be accessed by the CP3BT10 through the serial interface. The serial interface uses three pins of the RF interface: SDAT, SCLK, and $\overline{\text{SLE}}$.

The serial interface of the CP3BT10 always operates as the master, providing the shift clock (SCLK) and load enable ($\overline{\text{SLE}}$) signal to the radio chip. The radio chip always acts as the slave.

A 25-bit shift protocol is used to perform read/write accesses to the radio chip internal registers. The complete protocol is comprised of the following sections:

- 3-bit Header Field
- Read/Write Bit
- 5-bit Address Field
- 16-bit Data Field

Header

The 3-bit header contains the fixed data 101b (except for Fast Write Operations).

Read/Write Bit

The header is followed by the read/write control bit (R/W). If the Read/Write bit is clear, a write operation is performed and the 16-bit data portion is copied into the addressed radio chip register.

Address

The address field is used to select one of the radio chip internal registers.

Data

The data field is used to transfer data to or from a radio chip register. The timing is modified for reads, to transfer control over the data signal from the CP3BT10 to the radio chip.

Figure 14 shows the serial interface protocol format.

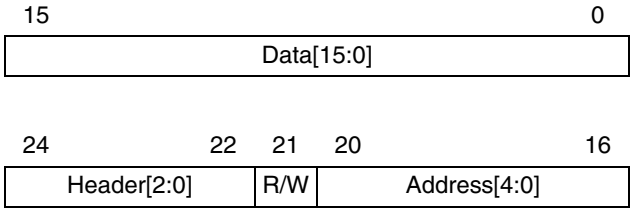

Figure 14. Serial Interface Protocol Format

Data is transferred on the serial interface with the most significant bit (MSB) first.

Obsolete

Write Operation

When the R/W bit is clear, the 16 bits of the data field are shifted out of the CP3BT10 on the falling edge of SCLK. Data is sampled by the radio chip on the rising edge of SCLK. When $\overline{SLE}$ is high, the 16-bit data are copied into the radio chip register on the next rising edge of SCLK. The data is loaded in the appropriate radio chip register depending on the state of the four address bits, Address[4:0]. Figure 15 shows the timing for the write operation.

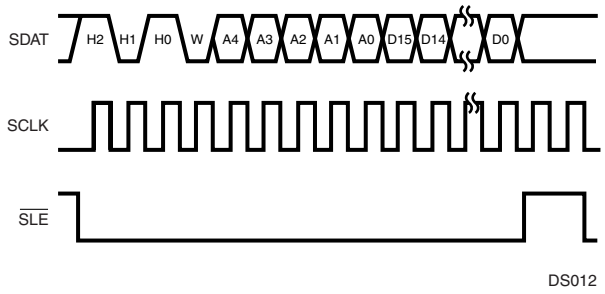

Figure 15. Serial Interface Write Timing

Read Operation

When the R/W bit is set, data is shifted out of the radio chip on the rising edge of SCLK. Data is sampled by the CP3BT10 on the falling edge of SCLK. On reception of the read command (R/W = 1), the radio chip takes control of the serial interface data line. The received 16-bit data is loaded by the CP3BT10 after the first falling edge of SCLK when $\overline{SLE}$ is high. When $\overline{SLE}$ is high, the radio chip releases the SDAT line again on the next rising edge of SCLK. The CP3BT10 takes control of the SDAT line again after the following rising edge of SCLK. Which radio chip register is read, depends on the state of the four address bits, Address[4:0]. The transfer is always 16 bits, without regard to the actual size of the register. Unimplemented bits contain undefined data. Figure 16 shows the timing for the read operation.

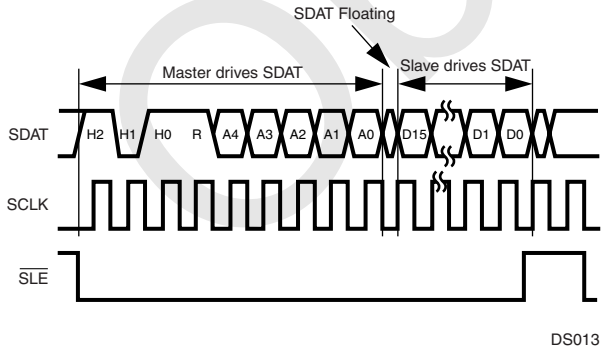

Figure 16. Serial Interface Read Timing

Fast-Write Operation

An enhanced serial interface mode including fast write capability is enabled when the FW bit in the radio chip is set. This bit activates a mode with decreased addressing and control overhead, which allows fast loading of time-critical registers during normal operation. When the FW bit is set, the 3-bit header may have a value other than 101b, and it is used to address the write-only registers of the radio chip . Fast writes load the same physical register as the corresponding normal write operation.

For the power control and CMOS output registers of the RF chip, it is only necessary to transmit a total of 8 bits (3 address bits and 5 data bits), because the remaining eight bits are unused.

While the FW bit is set, normal Read/Write operations are still valid and may be used to access non-time-critical control registers. Figure 17 shows the timing for a 16-bit Fast-Write transaction, and Figure 18 shows the timing for an 8-bit Fast-Write transaction.

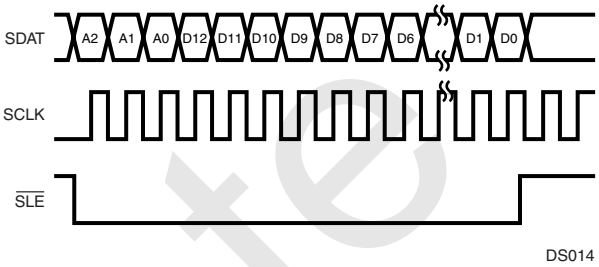

Figure 17. Serial Interface 16-bit Fast-Write Timing

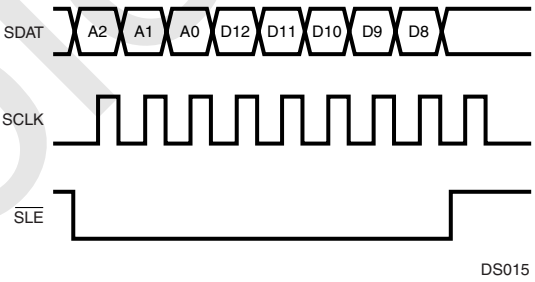

Figure 18. Serial Interface 8-bit Fast-Write Timing

32-Bit Write Operation

On the LMX5252, a 32-bit register is loaded by writing to the same register address twice. The first write loads the high word (bits 31:16), and the second write loads the low word (bits 15:0). The two writes must be separated by at least two clock cycles. For a 4-MHz clock, the minimum separation time is 500 ns.

The value read from a 32-bit register is a counter value, not the contents of the register. The counter value indicates which words have been written. If the high word has been written, the counter reads as 0000h. If both words have been written, the counter reads as 0001h. The value returned by reading a 32-bit register is independent of the contents of the register.

Figure 19 and Figure 20 show the timing for 32-bit register writing and reading.

The order for accessing the registers is from high to low: 17, 15, 14, 12, 11, 10, 9, 8, 7, 6, 5, 4, 2, and 1. These registers must be written during the initialization of the LMX5252.

Obsolete

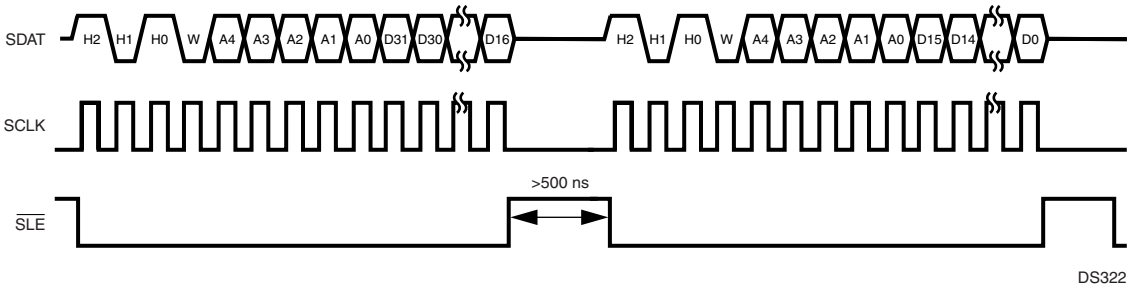

Figure 19. 32-Bit Write Timing

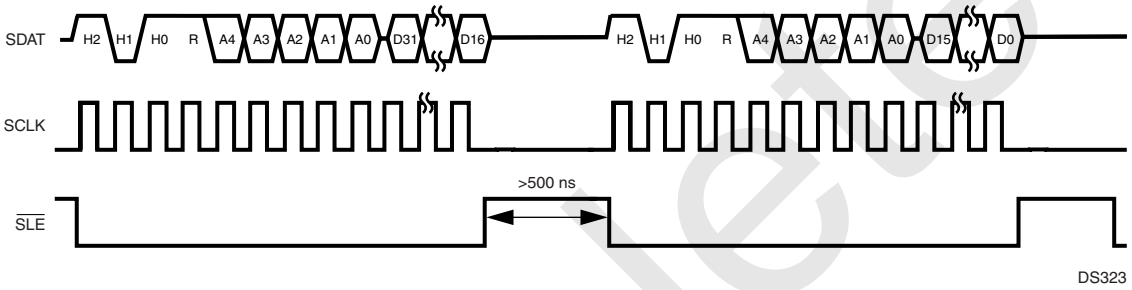

Figure 20. 32-Bit Read Timing

An example of a 32-bit write is shown in Table 32. In this example, the 32-bit value FFFF DC04h is written to register address 0Ah. In cycle 1, the high word (FFFFh) is written. In the first part of cycle 2, the CP3BT10 drives the header, R/W bit, and register address for a read cycle. In the second part of cycle 2, the LMX5252 drives the counter value. The counter value is 0, which indicates one word has been written. In cycle 3, the low word (DC04h) is written. In the first part of cycle 4, the CP3BT10 drives the header, R/W bit, and register address for a read cycle. In the second part of cycle 4, the LMX5252 drives the counter value. The counter value is 1, which indicates two words have been written.

Table 32 Example of 32-Bit Write with Interleaved Reads

Cycle	Serial Data on SDAT	Description
1	101 0 01010 1111111111111111	Write cycle driven by CP3BT10. Data is FFFFh. Address is 0Ah.
2	101 1 01010	First part of read cycle driven by CP3BT10. Address is 0Ah.
	0000000000000000	Second part of read cycle driven by LMX5252. Counter value is 0.
3	101 0 01010 1101110000000100	Write cycle driven by CP3BT10. Data is DC04h. Address is 0Ah.
4	101 1 01010	First part of read cycle driven by CP3BT10. Address is 0Ah.
	0000000000000001	Second part of read cycle driven by LMX5252. Counter value is 1.

Obsolete

15.3 LMX5251 POWER-UP SEQUENCE

To power-up a Bluetooth system based on the CP3BT10 and LMX5251 devices, the following sequence must be performed:

1. Apply VDD to the LMX5251.
2. Apply IOVCC and VCC to the CP3BT10.
3. Drive the RESET# pin of the LMX5251 high a minimum of 2 ms after the LMX5251 and CP3000 supply rails are powered up. This resets the LMX5251 and CP3BT10.
4. After internal Power-On Reset (POR) of the CP3BT10, the RFDATA pin is driven high. The RFCE, RFSYNC, and SDAT pins are in TRI-STATE mode. Internal pull-up/pull-down resistors on the CCB_CLOCK (SCLK), CCB_DATA (SDAT), CCB_LATCH ($\overline{SLE}$), and TX_RX_SYNC (RFSYNC) inputs of the LMX5251 pull these signals to states required during the power-up sequence.
5. When the RFDATA pin is driven high, the LMX5251 enables its oscillator. After an oscillator start-up delay, the LMX5251 drives a stable 12-MHz BBP_CLOCK (BBCLK) to the CP3BT10.
6. The Bluetooth baseband processor on the CP3BT10 now directly controls the RF interface pins and drives the logic levels required during the power-up phase. When the RFCE pin is driven high, the LMX5251 switches from “power-up” to “normal” mode and disables the internal pull-up/pull-down resistors on its RF interface inputs.
7. In “normal” mode, the oscillator of the LMX5251 is controlled by the RFCE signal. Driving RFCE high enables the oscillator, and the LMX5251 drives its BBP_CLOCK (BBCLK) output.

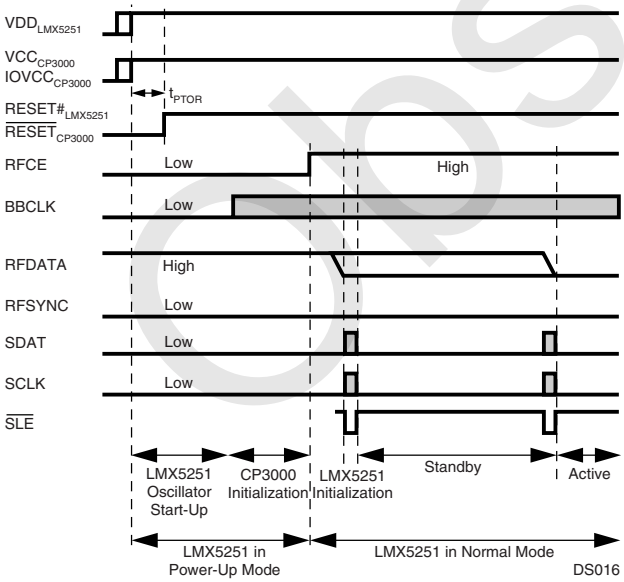

Figure 21. LMX5251 Power-Up Sequence

15.4 LMX5252 POWER-UP SEQUENCE

A Bluetooth system based on the CP3BT10 and LMX5252 devices has the following states:

- **Off**—When the LMX5252 enters Off mode, all configuration data is lost. In this state, the LMX5252 drives BPOR low.
- **Power-Up**—When the power supply is on and the LMX5252 RESET# input is high, the LMX5252 starts up its crystal oscillator and enters Power-Up mode. After the crystal oscillator is settled, the LMX5252 sends four clock cycles on BRCLK (BBCLK) before driving BPOR high.
- **RF Init**—The baseband controller on the CP3BT10 now drives RFCE high and takes control of the crystal oscillator. The baseband performs all the needed initialization (such as writing the registers in the LMX5252 and crystal oscillator trim).
- **Idle**—The baseband controller on the CP3BT10 drives RFDATA low when the initialization is ready. The LMX5252 is now ready to start transmitting, receiving, or enter Sleep mode.
- **Sleep**—The LMX5252 can be forced into Sleep mode at any time by driving RFCE low. All configuration settings are kept, only the Bluetooth low power clock is running (B3k2).
- **Wait XTL**—When RFCE goes high, the crystal oscillator becomes operational. When it is stable, the LMX5252 enters Idle mode and drives BRCLK (BBCLK).

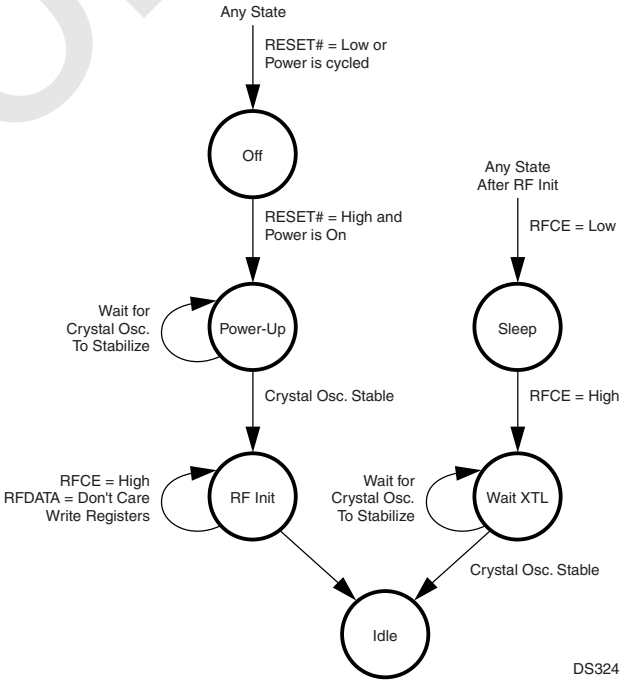

Figure 22. LMX5252 Power States

The power-up sequence for a Bluetooth system based on the CP3BT10 and LMX5252 devices is shown in Figure 23.

Obsolete

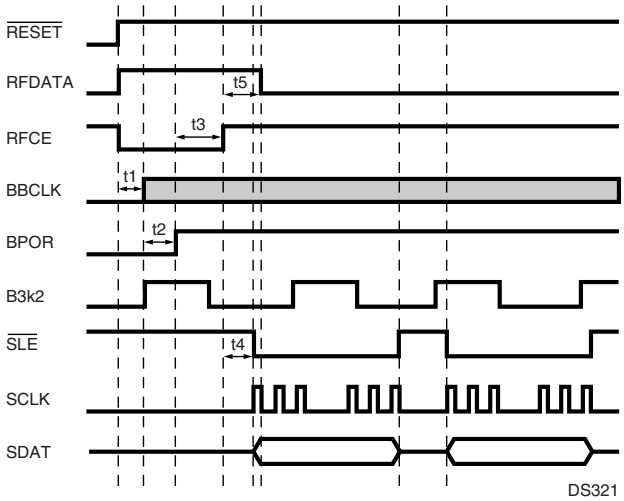

Figure 23. LMX5252 Power-Up Sequence

15.5 BLUETOOTH SLEEP MODE

The Bluetooth controller is capable of putting itself into a sleep mode for a specified number of Slow Clock cycles. In this mode, the controller clocks are stopped internally. The only circuitry which remains active are two counters (counter N and counter M) running at the Slow Clock rate. These counters determine the duration of the sleep mode.

The sequence of events when entering the LLC sleep mode is as follows:

1. The current Bluetooth counter contents are read by the CPU.
2. Software "estimates" the Bluetooth counter value after leaving the sleep mode.
3. The new Bluetooth counter value is written into the Bluetooth counter register.
4. The Bluetooth sequencer RAM is updated with the code required by the Bluetooth sequencer to enter/exit Sleep mode.
5. The Bluetooth sequencer RAM and the Bluetooth LLC registers are switched from the System Clock domain to the local 12 MHz Bluetooth clock domain. At this point, the Bluetooth sequencer RAM and Bluetooth LLC registers cannot be updated by the CPU, because the CPU no longer has access to the Bluetooth LLC.
6. Hardware Clock Control (HCC) is enabled, and the CP3BT10 enters a power-saving mode (Power Save or Idle mode). While in Power Save mode, the Slow Clock is used as the System Clock. While in Idle mode, the System Clock is turned off.
7. The Bluetooth sequencer checks if HCC is enabled. If HCC is enabled, the sequencer asserts HCC to the PMM. On the next rising edge of the low-frequency clock, the 1MHz clock and the 12 MHz clock are stopped locally within the Bluetooth LLC. At this point, the Bluetooth sequencer is stopped.
8. The M-counter starts counting. After M + 1 Slow Clock cycles, the HCC signal to the PMM is deasserted.
9. The PMM restarts the 12 MHz Main Clock (and the PLL, if required). The N-counter starts counting. After N + 1 Slow Clock cycles, the Bluetooth clocks (1 MHz and 12 MHz) are turned on again. The Bluetooth sequencer starts operating.
10. The Bluetooth sequencer waits for the completion of the sleep mode. When completed, the Bluetooth sequencer asserts a wake-up signal to the MIWU (see Section 13.0).
11. The PMM switches the System Clock to the high-frequency clock and the CP3BT10 enters Active mode again. HCC is disabled. The Bluetooth sequencer RAM and Bluetooth LLC registers are switched back from the local 12 MHz Bluetooth clock to the System Clock. At this point, the Bluetooth sequencer RAM and Bluetooth LLC registers are once again accessible by the CPU. If enabled, an interrupt is issued to the CPU.

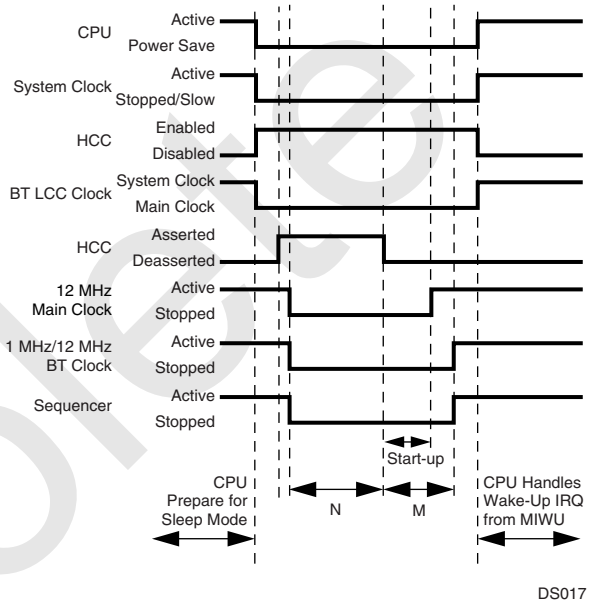

Figure 24. Bluetooth Sleep Mode Sequence

15.6 BLUETOOTH GLOBAL REGISTERS

Table 33 shows the memory map of the Bluetooth LLC global registers.

Table 33 Memory Map of Bluetooth Global Registers

Address (offset from 0E F180h)	Description
0000h–0048h	Global LLC Configuration
0049h–007Fh	Unused

15.7 BLUETOOTH SEQUENCER RAM

The sequencer RAM is a 1K memory-mapped section of RAM that contains the sequencer program. This RAM can be read and written by the CPU in the same way as the Static RAM space and can also be read by the sequencer in the Bluetooth LLC. Arbitration between these devices is performed in hardware.

Obsolete

15.8 BLUETOOTH SHARED DATA RAM

The shared data RAM is a 4.5K memory-mapped section of RAM that contains the link control data, RF programming look-up table, and the link payload. This RAM can be read and written in the same way as the Static RAM space and can also be read by the sequencer in the Bluetooth LLC. Arbitration between these devices is performed in hardware. Table 34 shows the memory map of the Bluetooth LLC shared Data RAM.

Table 34 Memory Map of Bluetooth Shared RAM

Address	Description
0000h–01D9h	RF Programming Look-up Table
01DAh–01FFh	Unused
0200h–023Fh	Link Control 0
0240h–027Fh	Link Control 1
0280h–02BFh	Link Control 2
02C0h–02FFh	Link Control 3
0300h–033Fh	Link Control 4
0340h–037Fh	Link Control 5
0380h–03BFh	Link Control 6
03C0h–03FFh	Link Control 7
0400h–11FFh	Link Payload 0–6

Obsolete

16.0 USB Controller

The USB node is an integrated USB node controller that features enhanced DMA support with many automatic data handling features. It is compatible with USB specification versions 1.0 and 1.1.

It integrates the required USB transceiver, a Serial Interface Engine (SIE), and USB endpoint (EP) FIFOs. Seven endpoint pipes are supported: one for the mandatory control endpoint and six to support interrupt, bulk, and isochronous endpoints. Each endpoint pipe has a dedicated FIFO, 8 bytes for the control endpoint and 64 bytes for the other endpoints.

16.1 FUNCTIONAL STATES

16.1.1 Line Condition Detection

At any given time, the USB node is in one of the following states

Table 35 State Descriptions

State	Descriptions
NodeOperational	Normal operation
NodeSuspend	Device operation suspend due to USB inactivity
NodeResume	Device wake-up from suspended state
NodeReset	Device reset

The NodeSuspend, NodeResume, or NodeReset line condition causes a transition from one operating state to another. These conditions are detected by specialized hardware and reported in the Alternate Event (ALTEV) register. If interrupts are enabled, an interrupt is generated on the occurrence of any of the specified conditions.

In addition to the dedicated input to the ICU for generating interrupts on these USB state changes, a wake-up signal is sent to the MIWU (see Section 13.0) when any activity is detected on the USB, if the bus was in the Idle state and the USB node is in the NodeSuspend state. The MIWU can be programmed to generate an edge-triggered interrupt when this occurs.

NodeOperational

This is the normal operating state of the node. In this state, the node is configured for operation on the USB.

NodeSuspend

A USB node is expected to enter NodeSuspend state when 3 ms have elapsed without any detectable bus activity. The USB node looks for this event and signals it by setting the SD3 bit in the ALTEV register, which causes an interrupt, to be generated (if enabled). Software should respond by putting the USB node in the NodeSuspend state.

The USB node can resume normal operation under software control in response to a local event in the device. It can wake up the USB bus via a NodeResume, or when detecting a resume command on the USB bus, which signals an interrupt to the CPU.

NodeResume

If the host has enabled remote wake-ups from the node, the USB node can initiate a remote wake-up.

Once software detects the event, which wakes up the bus, it releases the USB node from NodeSuspend state by initiating a NodeResume on the USB using the NFSR register. The node software must ensure at least 5 ms of Idle on the USB. While in NodeResume state, a constant “K” is signalled on the USB. This should last for at least 1 ms and no more than 5 ms, after which the USB host should continue sending the NodeResume signal for at least an additional 20 ms, and then completes the NodeResume operation by issuing the End Of Packet (EOP) sequence.

To successfully detect the EOP, software must enter the USB NodeOperational state by setting the NFSR register.

If no EOP is received from the host within 100 ms, software must re-initiate NodeResume.

NodeReset

When detecting a NodeResume or NodeReset signal while in NodeSuspend state, the USB node can signal this to the CPU by generating an interrupt.

USB specifications require that a device must be ready to respond to USB tokens within 10 ms after wake-up or reset.

Obsolete

16.2 ENDPOINT OPERATION

16.2.1 Address Detection

Packets are broadcast from the host controller to all nodes on the USB network. Address detection is implemented in hardware to allow selective reception of packets and to permit optimal use of CPU bandwidth. One function address with seven different endpoint combinations is decoded in parallel. If a match is found, then that particular packet is received into the FIFO; otherwise it is ignored.

The incoming USB Packet Address field and Endpoint field are extracted from the incoming bit stream. Then the address field is compared to the Function Address register (FADR). If a match is detected, the Endpoint field is compared to all of the Endpoint Control registers (EPCn) in parallel. A match then causes the payload data to be received or transmitted using the respective endpoint FIFO.

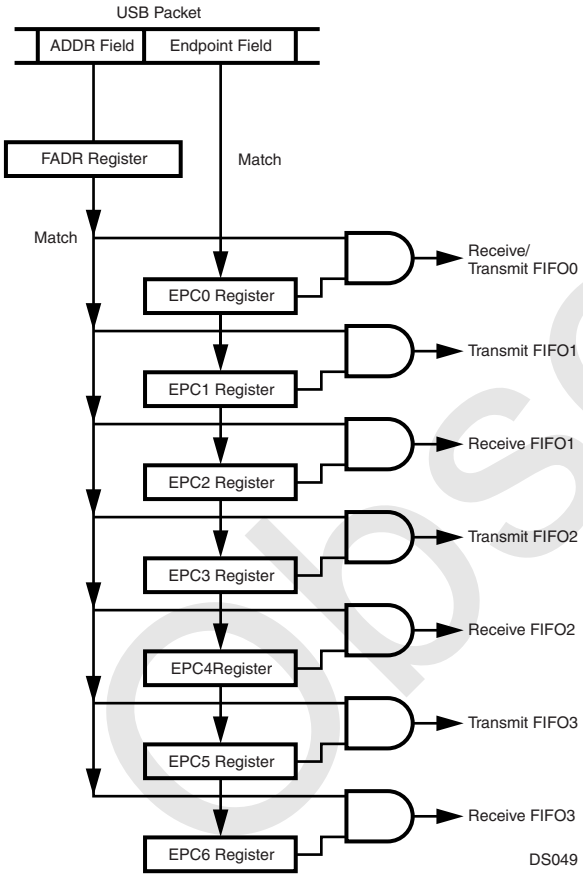

Figure 25. USB Function Address/Endpoint Decoding

16.2.2 Transmit and Receive Endpoint FIFOs

The USB node uses a total of seven transmit and receive FIFOs: one bidirectional transmit and receive FIFO for the mandatory control endpoint, three transmit FIFOs, and three receive FIFOs. As shown in Table 36, the bidirectional FIFO for the control endpoint is 8 bytes deep. The additional unidirectional FIFOs are 64 bytes each for both transmit and receive. Each FIFO can be programmed for one exclusive USB endpoint, used together with one globally decoded USB function address. Software must not enable both transmit and receive FIFOs for endpoint zero at any given time.

Table 36 Endpoint FIFO Sizes

Endpoint Number	TX FIFO		RX FIFO	
	Size (Bytes)	Name	Size (Bytes)	Name
0	FIFO0 (bidirectional, 8 bytes)			
1	64	TXFIFO1	-	-
2	-	-	64	RXFIFO1
3	64	TXFIFO2	-	-
4	-	-	64	RXFIFO2
5	64	TXFIFO3	-	-
6	-	-	64	RXFIFO3

If two endpoints in the same direction are programmed with the same endpoint number and both are enabled, data is received or transmitted to/from the endpoint with the lower number, until that endpoint is disabled for bulk or interrupt transfers, or becomes full or empty for ISO transfers. For example, if receive EP2 and receive EP4 both use endpoint 5 and are both isochronous, the first OUT packet is received into EP2 and the second OUT packet into EP4, assuming no software interaction in between. For ISO endpoints, this allows implementing a ping-pong buffer scheme together with the frame number match logic.

Endpoints in different directions programmed with the same endpoint number operate independently.

Obsolete

Bidirectional Control Endpoint FIFO0 Operation

FIFO0 should be used for the bidirectional control endpoint 0. It can be configured to receive data sent to the default address with the DEF bit in the EPC0 register. Isochronous transfers are not supported for the control endpoint.

The Endpoint 0 FIFO can hold a single receive or transmit packet with up to 8 bytes of data. Figure 26 shows the basic operation in both receive and transmit direction.

Note: The actual current operating state is not directly visible to software.

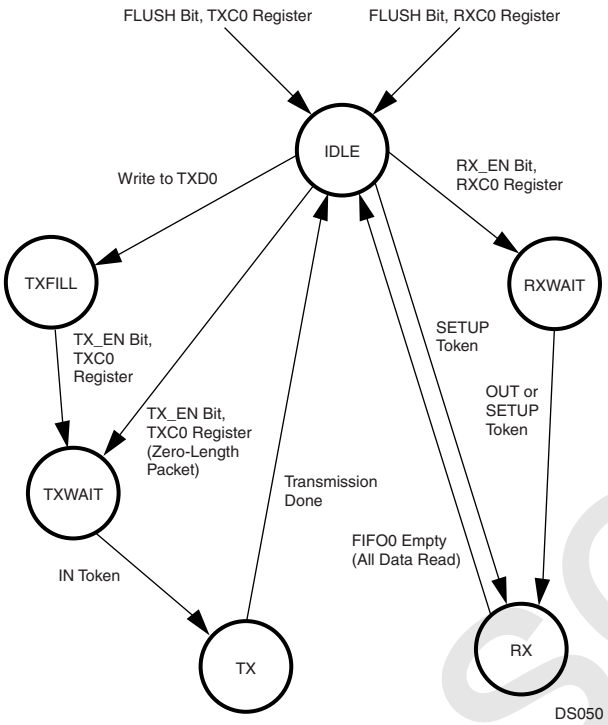

Figure 26. Endpoint 0 Operation

A packet written to the FIFO is transmitted if an IN token for the respective endpoint is received. If an error condition is detected, the packet data remains in the FIFO and transmission is retried with the next IN token.

The FIFO contents can be flushed to allow response to an OUT token or to write new data into the FIFO for the next IN token.

If an OUT token is received for the FIFO, software is informed that the FIFO has received data only if there was no error condition (CRC or STUFF error). Erroneous receptions are automatically discarded.

Transmit Endpoint FIFO Operation (TXFIFO1, TXFIFO2, TXFIFO3)

The Transmit FIFOs for endpoints 1, 3, and 5 support bulk, interrupt, and isochronous USB packet transfers larger than the actual FIFO size. Therefore, software must update the FIFO contents while the USB packet is transmitted on the bus. Figure 27 illustrates the operation of the transmit FIFOs.

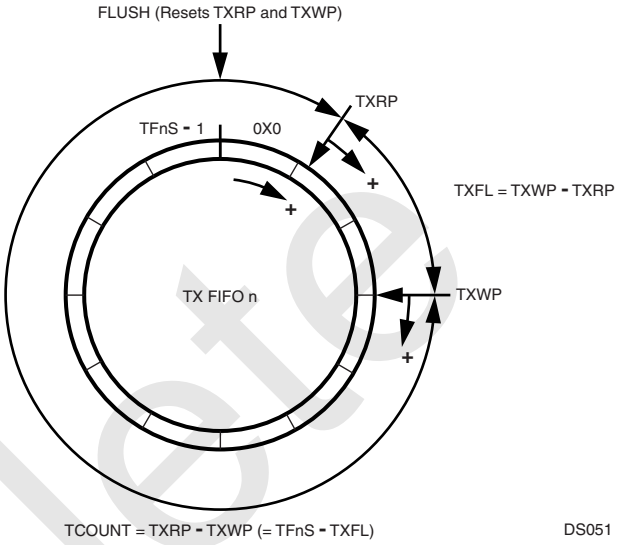

Figure 27. Transmit FIFO Operation

TFnS — The Transmit FIFO n Size is the total number of bytes available within the FIFO.

TXRP — The Transmit Read Pointer is incremented every time the Endpoint Controller reads from the transmit FIFO. This pointer wraps around to zero if TFnS is reached. TXRP is never incremented beyond the value of the write pointer TXWP. An underrun condition occurs if TXRP equals TXWP and an attempt is made to transmit more bytes when the LAST bit in the TXCMDx register is not set.

TXWP — The Transmit Write Pointer is incremented every time software writes to the transmit FIFO. This pointer wraps around to zero if TFnS is reached. If an attempt is made to write more bytes to the FIFO than actual space available (FIFO overrun), the write to the FIFO is ignored. If so, TCOUNT is checked for an indication of the number of empty bytes remaining.

TXFL — The Transmit FIFO Level indicates how many bytes are currently in the FIFO. A FIFO warning is issued if TXFL decreases to a specific value. The respective WARNn bit in the FWR register is set if TXFL is equal to or less than the number specified by the TFWL bit in the TXCn register.

TCOUNT — The Transmit FIFO Count indicates how many empty bytes can be filled within the transmit FIFO. This value is accessible by software in the TXSn register.

Obsolete

Receive Endpoint FIFO Operation (RXFIFO1, RXFIFO2, RXFIFO3)

The Receive FIFOs for endpoints 2, 4, and 6 support bulk, interrupt, and isochronous USB packet transfers larger than the actual FIFO size. If the packet length exceeds the FIFO size, software must read the FIFO contents while the USB packet is being received on the bus. Figure 28 shows the detailed behavior of receive FIFOs.

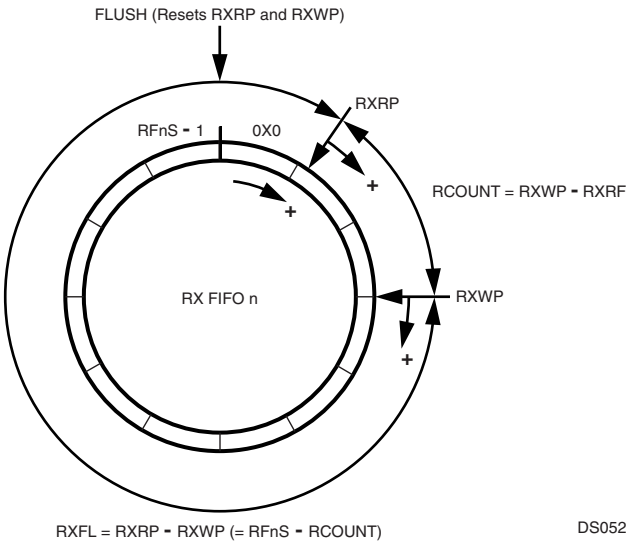

Figure 28. Receive FIFO Operation

RFnS — The Receive FIFO n Size is the total number of bytes available within the FIFO.

RXRP — The Receive Read Pointer is incremented with every read by software from the receive FIFO. This pointer wraps around to zero if RFnS is reached. RXRP is never incremented beyond the value of RXWP. If an attempt is made to read more bytes than are actually available (FIFO underrun), the last byte is read repeatedly.

RXWP — The Receive Write Pointer is incremented every time the Endpoint Controller writes to the receive FIFO. This pointer wraps around to zero if RFnS is reached. An overrun condition occurs if RXRP equals RXWP and an attempt is made to write an additional byte.

RXFL — The Receive FIFO Level indicates how many more bytes can be received until an overrun condition occurs with the next write to the FIFO. A FIFO warning is issued if RXFL decreases to a specific value. The respective WARNn bit in the FWR register is set if RXFL is equal to or less than the number specified by the RFWL bit in the RXCn register.

RCOUNT — The Receive FIFO Count indicates how many bytes can be read from the receive FIFO. This value is accessible by software from the RXSn register.

16.3 USB CONTROLLER REGISTERS

The USB node has a set of memory-mapped registers that can be read/written from the CPU bus to control the USB interface. Some register bits are reserved; reading from these bits returns undefined data. Reserved register bits must always be written with 0.

Table 37 USB Controller Registers

Name	Address	Description
MCNTRL	FF FD80h	Main Control Register
NFSR	FF FD8Ah	Node Functional State Register
MAEV	FF FD8Ch	Main Event Register
ALTEV	FF FD90h	Alternate Event Register
MAMSK	FF FD8Eh	Main Mask Register
ALTMSK	FF FD92h	Alternate Mask Register
TXEV	FF FD94h	Transmit Event Register
TXMSK	FF FD96h	Transmit Mask Register
RXEV	FF FD98h	Receive Event Register
RXMSK	FF FD9Ah	Receive Mask Register
NAKEV	FF FD9Ch	NAK Event Register
NAKMSK	FF FD9Eh	NAK Mask Register
FWEV	FF FDA0h	FIFO Warning Event Register
FWMSK	FF FDA2h	FIFO Warning Mask Register
FNH	FF FDA4h	Frame Number High Byte Register
FNL	FF FDA6h	Frame Number Low Byte Register
FAR	FF FD88h	Function Address Register
DMACNTRL	FF FDA8h	DMA Control Register
DMAEV	FF FDAAh	DMA Event Register
DMAMSK	FF FDACh	DMA Mask Register
MIR	FF FDAEh	Mirror Register
DMACNT	FF FDB0h	DMA Count Register
DMAERR	FF FDB2h	DMA Error Register

obsolete

Table 37 USB Controller Registers

Name	Address	Description
EPC0	FF FDC0h	Endpoint Control 0 Register
EPC1	FF FDD0h	Endpoint Control 1 Register
EPC2	FF FDD8h	Endpoint Control 2 Register
EPC3	FF FDE0h	Endpoint Control 3 Register
EPC4	FF FDDE8h	Endpoint Control 4 Register
EPC5	FF FDF0h	Endpoint Control 5 Register
EPC6	FF FDF8h	Endpoint Control 6 Register
TXS0	FF FDC4h	Transmit Status 0 Register
TXS1	FF FDD4h	Transmit Status 1 Register
TXS2	FF FDE4h	Transmit Status 2 Register
TXS3	FF FDF4h	Transmit Status 3 Register
TXC0	FF FDC6h	Transmit Command 0 Register
TXC1	FF FDD6	Transmit Command 1 Register
TXC2	FF FDE6h	Transmit Command 2 Register
TXC3	FF FDF6h	Transmit Command 3 Register
TXD0	FF FDC2h	Transmit Data 0 Register
TXD1	FF FDD2h	Transmit Data 1 Register
TXD2	FF FDE2h	Transmit Data 2 Register
TXD3	FF FDF2h	Transmit Data 3 Register
RXS0	FF FDCCh	Receive Status 0 Register
RXS1	FF FDDCh	Receive Status 1 Register
RXS2	FF FDECh	Receive Status 2 Register

Table 37 USB Controller Registers

Name	Address	Description
RXS3	FF FDFCh	Receive Status 3 Register
RXC0	FF FDCEh	Receive Command 0 Register
RXC1	FF FDDEh	Receive Command 1 Register
RXC2	FF FDEEh	Receive Command 2 Register
RXC3	FF FDFEh	Receive Command 3 Register
RXD0	FF FDCAh	Receive Data 0 Register
RXD1	FF FDDAh	Receive Data 2 Register
RXD2	FF FDEAh	Receive Data 2 Register
RXD3	FF FDFAh	Receive Data 3 Register

16.3.1 Main Control Register (MCNTRL)

The MCNTRL register controls the main functions of the USB node. The MCNTRL register provides read/write access from the CPU bus. Reserved bits must be written with 0, and they return 0 when read. It is clear after reset.

7 4	3	2 1	0
Reserved	NAT	Reserved	USBEN

USBEN The USB Enable controls whether the USB module is enabled. If the USB module is disabled, the 48 MHz clock within the USB node is stopped, all USB registers are initialized to their reset state, and the USB transceiver forces SE0 on the bus to prevent the hub from detected the USB node. The USBEN bit is clear after reset.
0 – The USB module is disabled.
1 – The USB module is enabled.

Obsolete

NAT — The Node Attached indicates that this node is ready to be detected as attached to USB. When clear, the transceiver forces SE0 on the USB node controller to prevent the hub (to which this node is connected) from detecting an attach event. After reset or when the USB node is disabled, this bit is cleared to give the device time before it must respond to commands. After this bit has been set, the device no longer drives the USB and should be ready to receive Reset signaling from the hub.

0 – Node not ready to be detected as attached.

1 – Node ready to be detected as attached.

16.3.2 Node Functional State Register (NFSR)

The NFSR register reports and controls the current functional state of the USB node. The NFSR register provides read/write access. It is clear after reset.

7 … 2	1 0
Reserved	NFS

NFS — The Node Functional State bits set the node state, as shown in Table 38. Software should initiate all required state transitions according to the respective status bits in the Alternate Event (ALTEV) register.

Table 38 USB Functional States

NFS	Node State	Description
00	NodeReset	This is the USB Reset state. This is entered upon a module reset or by software upon detection of a USB Reset. Upon entry, all endpoint pipes are disabled. DEF in the Endpoint Control 0 (EPC0) register and AD_EN in the Function Address (FAR) register should be cleared by software on entry to this state. On exit, DEF should be reset so the device responds to the default address.
01	NodeResume	In this state, resume “K” signalling is generated. This state should be entered by software to initiate a remote wake-up sequence by the device. The node must remain in this state for at least 1 ms and no more than 15 ms.
10	NodeOperational	This is the normal operational state for operation on the USB bus.
11	NodeSuspend	Suspend state should be entered by software on detection of a Suspend event while in Operational state. While in Suspend state, the transceivers operate in their low-power suspend mode. All endpoint controllers and the bits TX_EN, LAST, and RX_EN are reset, while all other internal states are frozen. On detection of bus activity, the RESUME bit in the ALTEV register is set. In response, software can cause entry to NodeOperational state.

Obsolete

16.3.3 Main Event Register (MAEV)

The Main Event Register summarizes and reports the main events of the USB transactions. This register provides read-only access. The MAEV register is clear after reset.

7	6	5	4	3	2	1	0
INTR	RX_EV	ULD	NAK	FRAME	TX_EV	ALT	WARN

WARN — The Warning Event bit indicates whether one of the unmasked bits in the FIFO Warning Event (FWEV) register has been set. This bit is cleared by reading the FWEV register.
0 – No warning event occurred.
1 – A warning event has occurred.

ALT — The Alternate Event bit indicates whether one of the unmasked ALTEV register bits has been set. This bit is cleared by reading the ALTEV register.
0 – No alternate event has occurred.
1 – An alternate event has occurred.

TX_EV — The Transmit Event bit indicates whether any of the unmasked bits in the Transmit Event (TXEV) register (TXFIFOn or TXUNDRNn) is set. Therefore, it indicates that an IN transaction has been completed. This bit is cleared when all the TX_DONE bits and the TXUNDRN bits in each Transmit Status (TXSn) register are cleared.
0 – No transmit event has occurred.
1 – A transmit event has occurred.

FRAME — The Frame Event bit indicates whether the frame counter has been updated with a new value, due to receipt of a valid SOF packet on the USB or to an artificial update if the frame counter was unlocked or a frame was missed. This bit is cleared when the register is read.
0 – The frame counter has not been updated.
1 – Frame counter has been updated.

NAK — The Negative Acknowledge Event indicates whether one of the unmasked NAK Event (NAKEV) register bits has been set. This bit is cleared when the NAKEV register is read.
0 – No unmasked NAK event has occurred.
1 – An unmasked NAK event has occurred.

UL — The Unlocked/Locked Detected bit is set when the frame timer has either entered unlocked condition from a locked condition, or has re-entered a locked condition from an unlocked condition as determined by the UL bit in the Frame Number (FNH or FNL) register. This bit is cleared when the register is read.
0 – Frame timer has not entered an unlocked condition from a locked condition or re-entered a locked condition from an unlocked condition.
1 – Frame timer has either entered an unlocked condition from a locked condition or re-entered a locked condition from an unlocked condition.

RX_EV — The Receive Event bit is set if any of the unmasked bits in the Receive Event (RXEV) register is set. It indicates that a SETUP or OUT transaction has been completed. This bit is cleared when all of the RX_LAST bits in each Receive Status (RXSn) register and all RX-OVRRN bits in the RXEV register are cleared.
0 – No receive event has occurred.
1 – A receive event has occurred.

INTR — The Master Interrupt Enable bit is hardwired to 0 in the Main Event (MAEV) register; bit 7 in the Main Mask (MAMSK) register is the Master Interrupt Enable.
0 – USB interrupts disabled.
1 – USB interrupts enabled.

16.3.4 Main Mask Register (MAMSK)

The MAMSK register masks out events reported in the MAEV registers. A set bit enables the interrupts for the respective event in the MAEV register. If the corresponding bit is clear, interrupt generation for this event is disabled. This register provides read/write access. The MAMSK register is clear after reset.

7	6	5	4	3	2	1	0
INTR	RX_EV	ULD	NAK	FRAME	TX_EV	ALT	WARN

16.3.5 Alternate Event Register (ALTEV)

The ALTEV register summarizes and reports the further events in the USB node. This register provides read-only access. The ALTEV register is clear after reset.

7	6	5	4	3	2	1	0
RESUME	RESET	SD5	SD3	EOP	DMA	Reserved	

DMA — The DMA Event bit indicates that one of the unmasked bits in the DMA Event (DMAEV) register has been set. The DMA bit is read-only and clear, when the DMAEV register is cleared.
0 – No DMA event has occurred.
1 – A DMA event has occurred.

EOP — The End of Packet bit indicates whether a valid EOP sequence has been detected on the USB. It is used when this device has initiated a Remote wake-up sequence to indicate that the Resume sequence has been acknowledged and completed by the host. This bit is cleared when the register is read.
0 – No EOP sequence detected.
1 – EOP sequence detected.

Obsolete

SD3 The Suspend Detect 3 ms bit is set after 3 ms of IDLE have been detected on the upstream port, indicating that the device should be suspended. The suspend occurs under software control by writing the suspend value to the Node Functional State (NFSR) register. This bit is cleared when the register is read.
0 – No 3 ms in IDLE has been detected.
1 – 3 ms in IDLE has been detected.

SD5 The Suspend Detect 5 ms bit is set after 5 ms of IDLE have been detected on the upstream port, indicating that this device is permitted to perform a remote wake-up operation. The resume may be initiated under software control by writing the resume value to the NFSR register. This bit is cleared when the register is read.
0 – No 5 ms in IDLE has been detected.
1 – 5 ms in IDLE has been detected.

RESET The Reset bit is set when 2.5 μs of SEO have been detected on the upstream port. In response, the functional state should be reset (NFS in the NFSR register is set to RESET), where it must remain for at least 100 μs. The functional state can then return to Operational state. This bit is cleared when the register is read.
0 – No 2.5 μs in SEO have been detected.
1 – 2.5 μs in SEO have been detected.

RESUME The Resume bit indicates whether resume signalling has been detected on the USB when the device is in Suspend state (NFS in the NFSR register is set to SUSPEND), and a non-IDLE signal is present on the USB, indicating that this device should begin its wake-up sequence and enter Operational state. Resume signalling can only be detected when the 48 MHz PLL clock is enabled to the USB controller. This bit is cleared when the register is read.
0 – No resume signalling detected.
1 – Resume signalling detected.

16.3.6 Alternate Mask Register (ALTMSK)

A set bit in the ALTMSK register enables automatic setting of the ALT bit in the MAEV register when the respective event in the ALTEV register occurs. Otherwise, setting MAEV.ALT bit is disabled. The ALTMSK register is clear after reset. It provides read/write access from the CPU bus.

7	6	5	4	3	2	1	0
RESUME	RESET	SD5	SD3	EOP	DMA	Reserved	

16.3.7 Transmit Event Register (TXEV)

The TXEV register reports the current status of the FIFOs, used by the three Transmit Endpoints. The TXEV register is clear after reset. It provides read-only access.

7 – 4	3 – 0
TXUDRRN	TXFIFO

TXFIFO The Transmit FIFO n bits are copies of the TX_DONE bits from the corresponding Transmit Status registers (TXSn). A bit is set when the IN transaction for the corresponding transmit endpoint n has been completed. These bits are cleared when the corresponding TXSn register is read.

TXUDRRN The Transmit Underrun n bits are copies of the respective TX_URUN bits from the corresponding Transmit Status registers (TXSn). Whenever any of the Transmit FIFOs underflows, the respective TXUDRRN bit is set. These bits are cleared when the corresponding Transmit Status register is read.
Note: Since Endpoint 0 implements a store and forward principle, an underrun condition for FIFO0 cannot occur. This results in the TXUDRRN0 bit always being read as 0.

16.3.8 Transmit Mask Register (TXMSK)

The TXMSK register is used to select the bits of the TXEV registers, which causes the TX_EV bit in the MAEV register to be set. When a bit is set and the corresponding bit in the TXEV register is set, the TX_EV bit in the MAEV register is set. When clear, the corresponding bit in the TXEV register does not cause TX_EV to be set. The TXMSK register provides read/write access. It is clear after reset.

7 – 4	3 – 0
TXUDRRN	TXFIFO

Obsolete

16.3.9 Receive Event Register (RXEV)

The RXEV register reports the current status of the FIFO, used by the three Receive Endpoints. The RXEV register is clear after reset. It provides read-only access from the CPU bus.

7 – 4	3 – 0
RXOVRRN	RXFIFO

RXFIFO — The Receive FIFO n are set whenever either RX_ERR or RX_LAST in the respective Receive Status registers (RXSn) are set. Reading the corresponding RXSn register automatically clears these bits. The USB node discards all packets for Endpoint 0 received with errors. This is necessary in case of retransmission due to media errors, ensuring that a good copy of a SETUP packet is captured. Otherwise, the FIFO may potentially be tied up, holding corrupted data and unable to receive a retransmission of the same packet (the RXFIFO0 bit only reflects the value of RX_LAST for Endpoint 0). If data streaming is used for the receive endpoints (EP2, EP4 and EP6), software must check the respective RX_ERR bits to ensure the packets received are not corrupted by errors.

RXOVRRN — The Receive Overrun n bits are set when an overrun condition is indicated in the corresponding receive FIFO n. They are cleared when the register is read. Software must check the respective RX_ERR bits that packets received for the other receive endpoints (EP2, EP4 and EP6) are not corrupted by errors, as these endpoints support data streaming (packets which are longer than the actual FIFO depth).

16.3.10 Receive Mask Register (RXMSK)

The RXMSK register is used to select the bits of the RXEV register, which cause the RX_EV bit in the MAEV register to be set. When set and the corresponding bit in the RXEV register is set, RX_EV bit in the MAEV register is set. When clear, the corresponding bit in the RXEV register does not cause the RX_EV bit to be set. The RXMSK register provides read/write access. This register is clear after reset.

7 – 4	3 – 0
RXOVRRN	RXFIFO

16.3.11 NAK Event Register (NAKEV)

A bit in the NAKEV register is set when a Negative Acknowledge (NAK) was generated by the corresponding endpoint. The NAKEV register provides read-only access from the CPU bus. It is clear after reset.

7 – 4	3 – 0
OUT	IN

IN — The IN n bits are set when a NAK handshake is generated for an enabled address/endpoint combination (AD_EN in the Function Address, FAR, register is set and EP_EN in the Endpoint Control, EPCx, register is set) in response to an IN token. These bits are cleared when the register is read.

OUT — The OUT n bits are set when a NAK handshake is generated for an enabled address/endpoint combination (AD_EN in the FAR register is set and EP_EN in the EPCx register is set) in response to an OUT token. These bits are not set if NAK is generated as result of an overrun condition. They are cleared when the register is read.

16.3.12 NAK Mask Register (NAKMSK)

The NAKMSK register is used to select the bits of the NAKEV register, which cause the NAK bit in the MAEV register to be set. When set and the corresponding bit in the NAKEV register is set, the NAK bit in the MAEV register is set. When cleared, the corresponding bit in the NAKEV register does not cause NAK to be set. The NAKMSK register provides read/write access. It is clear after reset.

7 – 4	3 – 0
OUT	IN

Obsolete

16.3.13 FIFO Warning Event Register (FWEV)

The FWEV register signals whether a receive or transmit FIFO has reached its warning limit. It reports the status for all FIFOs, except for the Endpoint 0 FIFO, as no warning limit can be specified for this FIFO. The FWEV register provides read-only access from the CPU bus. It is clear after reset.

7 5	4	3 1	0
RXWARN3:1	Res.	TXWARN3:1	Res.

TXWARN3:1 The Transmit Warning n bits are set when the respective transmit endpoint FIFO reaches the warning limit, as specified by the TFWL bits of the respective TXCn register, and transmission from the respective endpoint is enabled. These bits are cleared when the warning condition is cleared by either writing new data to the FIFO when the FIFO is flushed, or when transmission is done, as indicated by the TX_DONE bit in the TXSn register.

RXWARN3:1 The Receive Warning n bits are set when the respective receive endpoint FIFO reaches the warning limit, as specified by the RFWL bits of the respective EPCx register. These bits are cleared when the warning condition is cleared by either reading data from the FIFO or when the FIFO is flushed.

16.3.14 FIFO Warning Mask Register (FWMSK)

The FWMSK register selects which FWEV bits are reported in the MAEV register. A set FWMSK bit with the corresponding bit in the FWEV register set, causes the WARN bit in the MAEV register to be set. When clear, the corresponding bit in the FWEV register does not cause WARN to be set. The FWMSK register provides read/write access. This register is clear after reset.

7 5	4	3 1	0
RXWARN3:1	Res.	TXWARN3:1	Res.

16.3.15 Frame Number High Byte Register (FNH)

The FNH register contains the three most significant bits (MSB) of the current frame counter as well as status and control bits for the frame counter. This register is loaded with C0h after reset. It provides access from the CPU bus as described below.

7	6	5	4 3	2 0
MF	UL	RFC	Reserved	FN10:8

FN10:8 The Frame Number field holds the three most significant bits (MSB) of the current frame number, received in the last SOF packet. If a valid frame number is not received within 12060 bit times (Frame Length Maximum, FLMAX, with tolerance) of the previous change, the frame number is incremented artificially. If two successive frames are missed or are incorrect, the current FN is frozen and loaded with the next frame number from a valid SOF packet. If the frame number low byte was read by software before reading the FNH register, software actually reads the contents of a buffer register which holds the value of the three frame number bits of this register when the low byte was read. Therefore, the correct sequence to read the frame number is: FNL, FNH. Read operations to the FNH register, without first reading the Frame Number Low Byte (FNL) register directly, read the actual value of the three MSBs of the frame number. The FN bits provide read-only access. On reset, the FN bits are cleared.

RFC The Reset Frame Count bit is used to reset the frame number to 000h. This bit always reads as 0. Due to the synchronization elements the frame counter reset actually occurs a maximum of 3 USB clock cycles (12 MHz) plus 2.5 CPU clock cycles after the write to the RFC bit.

0 – Writing 0 has no effect.

1 – Writing 1 resets the frame counter.

UL The Unlock Flag bit indicates that at least two frames were received without an expected frame number, or that no valid SOF was received within 12060 bit times. If this bit is set, the frame number from the next valid SOF packet is loaded in FN. The UL bit provides read-only access. After reset, this bit is set. This bit is set by the hardware and is cleared by reading the FNH register.

0 – No condition indicated.

1 – At least two frames were received without an expected frame number, or no valid SOF was received within 12060 bit times.

Obsolete

MF — The Missed SOF bit is set when the frame number in a valid received SOF does not match the expected next value, or when an SOF is not received within 12060 bit times. The MF bit provides read-only access. On reset, this bit is set. This bit is set by the hardware and is cleared by reading the FNH register.
0 – No condition indicated.
1 – The frame number in a valid SOF does not match the expected next value, or no valid SOF was received within 12060 bit times.

16.3.16 Frame Number Low Byte Register (FNL)

The FNL register holds the low byte of the frame number, as described above. To ensure consistency, reading this low byte causes the three frame number bits in the FNH register to be locked until this register is read. The correct sequence to read the frame number is: FNL first, followed by FNH. This register provides read-only access. After reset, the FNL register is clear.

7							0
FN7:0							

Note: If the frame counter is updated due to a receipt of a valid SOF or an artificial update (i.e. missed frame or unlocked/locked detect), it will take the synchronization elements a maximum of 2.5 CPU clock cycles to update the FNH and FNL registers.

16.3.17 Function Address Register (FAR)

The Function Address Register specifies the device function address. The different endpoint numbers are set for each endpoint individually using the Endpoint Control registers. The FAR register provides read/write access. After reset, this register is clear. If the DEF bit in the Endpoint Control 0 register is set, Endpoint 0 responds to the default address.

7	6						0
AD_EN	AD						

AD — The Address field holds the 7-bit function address used to transmit and receive all tokens addressed to this device.

AD_EN — The Address Enable bit controls whether the AD field is used for address comparison. If not, the device does not respond to any token on the USB bus.
0 – The device does not respond to any token on the USB bus.
1 – The AD field is used for address comparison.

16.3.18 Control Register (DMACNTRL)

The DMACNTRL register controls the main DMA functions of the USB node. The DMACTRL register provides read/write access. This register is clear after reset.

7	6	5	4	3	2	0
DEN	IGNRXTGL	DTGL	ADMA	DMOD	DSRC	

DSRC — The DMA Source bit field holds the binary-encoded value that specifies which of the endpoints, 1 to 6, is enabled for DMA support. The DSRC bits are cleared on reset. Table 39 summarizes the DSRC bit settings.

Table 39 DSRC Bit Description

DSRC	Endpoint Number
000	1
001	2
010	3
011	4
100	5
101	6
11x	Reserved

DMOD — The DMA Mode bit specifies when a DMA request is issued. If clear, a DMA request is issued on transfer completion. For transmit endpoints EP1, EP3, and EP5, the data is completely transferred, as indicated by the TX_DONE bit (to fill the FIFO with new transmit data). For receive endpoints EP2, EP4, and EP6, this is indicated by the RX_LAST bit. When the DMOD bit is set, a DMA request is issued when the respective FIFO warning bit is set. The DMOD bit is cleared after reset.
0 – DMA request is issued on transfer completion.
1 – DMA request is issued when the respective FIFO warning bit is set.

ADMA — The Automatic DMA bit enables Automatic DMA (ADMA) and automatically enables the selected receive or transmit endpoint. Before ADMA mode can be enabled, the DEN bit in the DMA Control (DMACNTRL) register must be cleared. ADMA mode functions until any bit in the DMA Event (DMAEV) register is set, except for NTGL. To initiate ADMA mode, all bits in the DMAEV register must be cleared, except for NTGL.
0 – Automatic DMA disabled.
1 – Automatic DMA enabled.

Obsolete

DTGL — The DMA Toggle bit is used to determine the initial *state* of Automatic DMA (ADMA) operations. Software initially sets this bit if starting with a DATA1 operation, and clears this bit if starting with a DATA0 operation. Writes to this bit also update the NTGL bit in the DMAEV register.

IGNRXTGL — The Ignore RX Toggle controls whether the compare between the NTGL bit in the DMAEV register and the TOGGLE bit in the respective RXSn register is ignored during receive operations. If the compare is ignored, a mismatch of the bits during a receive operation does not stop ADMA operation. If the compare is not ignored, the ADMA stops in case of a mismatch of the two toggle bits. After reset, this bit is cleared.
0 – Compare toggle bits.
1 – Ignore toggle bits.

DEN — The DMA Enable bit enables DMA mode. If DMA mode is disabled and the current DMA cycle has been completed (or was not yet issued) the DMA transfer is terminated. This bit is cleared after reset.
0 – DMA mode disabled.
1 – DMA mode enabled.

16.3.19 DMA Event Register (DMAEV)

The DMAEV register bits are used in ADMA mode. Bits 0 to 3 may cause an interrupt if not cleared, even if the device is not set to ADMA mode. Until all of these bits are cleared, ADMA mode cannot be initiated. Conversely, ADMA mode is automatically terminated when any of these bits are set. The DMAEV register provides access from the CPU bus as described below. It is clear after reset.

7	6	5	4	3	2	1	0
Reserved		NTGL	ARDY	DSIZ	DCNT	DERR	DSHLT

DSHLT — The DMA Software Halt bit is set when ADMA operations have been halted by software. This bit is set by the hardware only after the DMA engine completes any necessary cleanup operations and returns to Idle state.
The DSHLST bits provide read access and can only be written with a 0 from the CPU bus. After reset these bits are cleared.
0 – No software ADMA halt.
1 – ADMA operations have been halted by software.

DERR — The DMA Error bit is set to indicate that a packet has not been received or transmitted correctly. It is also set, if the TOGGLE bit in the RXSx/TXSx register does not equal the NTGL bit in the DMAEV register after packet reception/transmission. (Note that this comparison is made before the NTGL bit changes state due to packet transfer). For receiving, the DERR bit is equivalent to the RX_ERR bit. For transmitting, the DERR bit is equivalent to the TX_DONE bit (set) and the ACK_STAT bit (not set). If the AEH bit in the DMA Error Count (DMAERR) register is set, the DERR bit is not set until DMAERRCNT in the DMAERR register is cleared, and another error is detected. Errors are handled as specified in the DMAERR register. The DERR bit provides read access and can only be written with a 0 from the CPU bus. After reset this bit is cleared.
0 – No DMA error occurred.
1 – DMA error occurred.

DCNT — The DMA Count bit is set when the DMA Count (DMACNT) register is 0 (see the DMACNT register for more information). The DCNT bit provides read access and can only be written with a 0 from the CPU bus. After reset this bit is cleared.
0 – DMACNT register is not 0.
1 – DMACNT register is 0.

DSIZ — The DMA Size bit is only significant for DMA receive operations. It indicates, by being set, that a packet has been received which is less than the full length of the FIFO. This normally indicates the end of a multi-packet transfer. The DSIZ bit provides read access and can only be written with a 0 from the CPU bus. After reset this bit is cleared.
0 – No condition indicated.
1 – A packet has been received which is less than the full length of the FIFO.

ARDY — The Automatic DMA Ready bit is set when the ADMA mode is ready and active. After setting the DMACNTRL.ADMA bit and the active USB transaction (if any) is finished and the specified endpoint (DMACNTRL.DSRC) is flushed, the USB node enters ADMA mode. This bit is automatically cleared when the ADMA mode is finished and the current DMA operation is completed. After reset the ARDY bit is cleared.
0 – ADMA mode not ready.
1 – ADMA mode ready and active.

NTGL — The Next Toggle bit determines the toggle state of the next data packet sent (if transmitting), or the expected toggle state of the next data packet (if receiving). This bit is initialized by writing to the DTGL bit of the DMACNTRL register. It then changes state with every packet sent or received on the endpoint presently selected by DSRC[2:0]. If DTGL write operation occurs simultaneously with the bit update operation, the write takes precedence. If transmitting, whenever ADMA operations are in progress the DTGL bit overrides the corresponding TOGGLE bit in the TXCx register. In this way, the alternating data toggle occurs correctly on the USB. Note that there is no corresponding mask bit for this event because it is not used to generate interrupts. The NTGL bit provides read-only access from the CPU bus and is cleared after reset.

obsolete

16.3.20 DMA Mask Register (DMAMSK)

Any set bit in the DMAMSK register enables automatic setting of the DMA bit in the ALTEV register when the respective event in the DMAEV register occurs. Otherwise, setting the DMA bit is disabled. For a description of bits 0 to 3, see the DMAEV register. The DMAMSK register provides read/write access. After reset it is clear. Reading reserved bits returns undefined data.

7 – 4	3	2	1	0
Reserved	DSIZ	DCNT	DERR	DSHLT

16.3.21 Mirror Register (MIR)

The MIR register is a read-only register. Because reading it does not alter the state of the TXSn or RXSn register to which it points, software can freely check the status of the channel. At reset it is initialized to 1Fh.

7 – 0
STAT

STAT — The Status field mirrors the status bits of the transmitter or receiver n selected by the DSRC[2:0] field in the DMACNTRL register (DMA need not be active or enabled). It corresponds to TXSn or RXSn, respectively.

16.3.22 DMA Count Register (DMACNT)

The DMACNT register specifies a maximum count for ADMA operations. The DMACNT register provides read/write access. After reset this register is clear.

7 – 0
DCOUNT

DCOUNT — The DMA Count field is decremented on completion of a DMA operation until it reaches 0. Then the DCNT bit in the DMA Event register is set, only when the next successful DMA operation is completed. This register does not underflow. For receive operations, this count decrements when the packet is received successfully, and then transferred to memory using DMA. For transmit operations, this count decrements when the packet is transferred from memory using DMA, and then transmitted successfully. Software loads DCOUNT with (number of packets to transfer) - 1. If a DMACNT write operation occurs simultaneously with the decrement operation, the write takes precedence.

16.3.23 DMA Error Register (DMAERR)

The DMAERR register holds the 7-bit DMA error counter and a control bit to specify DMA error handling. The DMAERR register provides read/write access. It is clear after reset.

7	6 – 0
AEH	DMAERRCNT

DMAERRCNT — The DMA Error Counter, together with the automatic error handling feature, defines the maximum number of consecutive bus errors before ADMA mode is stopped. Software can set the 7-bit counter to a preset value. Once ADMA is started, the counter decrements from the preset value by 1 every time a bus error is detected. Every successful transaction resets the counter back to the preset value. When ADMA mode is stopped, the counter is also set back to the preset value. If the counter reaches 0 and another erroneous packet is detected, the DERR bit in the DMA Event register is set. This register cannot underrun. Software loads DMAERRCNT with 3D (maximum number of allowable transfer attempts) - 1. A write access to this register is only possible when ADMA is inactive. Otherwise, it is ignored. Reading from this register while ADMA is active returns the current counter value. Reading from it while ADMA is inactive returns the preset value. The counter decrements only if the AEH bit is set (automatic error handling activated).

AEH — The Automatic Error Handling bit has two different meanings, depending on the current mode:

- *Non-Isochronous mode*—This mode is used for bulk, interrupt and control transfers. Setting AEH in this mode enables automatic handling of packets containing CRC or bit-stuffing errors. If this bit is set during transmit operations, the USB node automatically reloads the FIFO and reschedules the packet to which the host did not return an ACK. If this bit is clear, automatic error handling ceases. If this bit is set during receive operations, a packet received with an error (as specified in the DERR bit description in the DMAEV register) is automatically flushed from the FIFO being used so that the packet can be received again. If this bit is cleared, automatic error handling ceases.
- *Isochronous mode*—Setting this bit allows the USB node to ignore packets received with errors (as specified in the DERR bit description in the DMAMSK register). If this bit is set during receive operations, the USB node is automatically flushed and the receive FIFO is reset to

Obsolete

receive the next packet. The erroneous packet is ignored and not transferred via DMA. If this bit is cleared, automatic error handling ceases.

16.3.24 Endpoint Control 0 Register (EPC0)

The EPC0 register controls the mandatory Endpoint 0. It is clear after reset. Reserved bits read undefined data.

7	6	5 4	3 0
STALL	DEF	Reserved	EP

EP — The Endpoint Address field holds the 4-bit endpoint address. For Endpoint 0, these bits are hardwired to 0000b. Writing a 1 to any of the EP bits is ignored.

DEF — The Default Address aids in the transition from the default address to the assigned address. When set, the device responds to the default address without regard to the contents of FAR6-0/EP03-0 fields. When an IN packet is transmitted for the endpoint, the DEF bit is automatically cleared. This bit provides read/write access from the CPU bus. After reset, this bit is clear. The transition from the default address 00000000000b to an address assigned during bus enumeration may not occur in the middle of the SET_ADDRESS control sequence. This is necessary to complete the control sequence. However, the address must change immediately after this sequence finishes in order to avoid errors when another control sequence immediately follows the SET_ADDRESS command. On USB reset, software has 10 ms for set-up, and should write 80h to the FAR register and 00h to the EPC0 register. On receipt of a SET_ADDRESS command, software must write 40h to the EPC0 register and 80h to the FAR register. It must then queue a zero length IN packet to complete the status phase of the SET_ADDRESS control sequence.
0 – Do not respond to the default address.
1 – Respond to default address.

STALL — The Stall bit can be used to enable STALL handshakes under the following conditions:
- The transmit FIFO is enabled and an IN token is received.
- The receive FIFO is enabled and an OUT token is received.

A SETUP token does not cause a STALL handshake to be generated when this bit is set. After transmitting the STALL handshake, the RX_LAST and the TX_DONE bits in the respective Receive/Transmit Status registers are set. This bit allows read/write access from the CPU bus. After reset this bit is cleared.
0 – Disable STALL handshakes.
1 – Enable STALL handshakes.

16.3.25 Transmit Status 0 Register (TXS0)

The TXS0 register reports the transmit status of the mandatory Endpoint 0. It is loaded with 08h after reset. This register allows read-only access from the CPU bus.

7	6	5	4	3 0
Res.	ACK_STAT	TX_DONE	Res.	TCOUNT

TCOUNT — The Transmission Count field indicates the number of empty bytes available in the FIFO. This field is never larger than 8 for Endpoint 0.

TX_DONE — The Transmission Done bit indicates whether a packet has completed transmission. The TX_DONE bit is cleared when this register is read.
0 – No completion of packet transmission has occurred.
1 – A packet has completed transmission.

ACK_STAT — The Acknowledge Status bit indicates the status, as received from the host, of the ACK for the packet previously sent. This bit is to be interpreted when TX_DONE is set. It is set when an ACK is received; otherwise, it remains cleared. This bit is cleared when this register is read.
0 – No ACK received.
1 – ACK received.

16.3.26 Transmit Command 0 Register (TXC0)

The TXC0 register controls the mandatory Endpoint 0 when used in transmit direction. This register allows read/write access from the CPU bus. It is clear after reset. Reading reserved bits returns undefined data.

7 5	4	3	2	1	0
Reserved	IGN_IN	FLUSH	TOGGLE	Res.	TX_EN

TX_EN — The Transmission Enable bit enables data transmission from the FIFO. It is cleared by hardware after transmitting a single packet, or a STALL handshake, in response to an IN token. It must be set by software to start packet transmission. The RX_EN bit in the Receive Command 0 (RXC0) register takes precedence over this bit; i.e. if the RX_EN bit is set, the TX_EN bit is ignored until RX_EN is reset. Zero length packets are indicated by setting this bit without writing any data to the FIFO.
0 – Transmission from the FIFO disabled.
1 – Transmission from the FIFO enabled.

TOGGLE — The Toggle bit specifies the PID used when transmitting the packet. A value of 0 causes a DATA0 PID to be generated, while a value of 1 causes a DATA1 PID to be generated. This bit is not altered by the hardware.
0 – DATA0 PID is used.
1 – DATA1 PID is used.

Obsolete

FLUSH — Writing a 1 to the Flush FIFO bit flushes all data from the control endpoint FIFOs, resets the endpoint to Idle state, clears the FIFO read and write pointer, and then clears itself. If the endpoint is currently using the FIFO0 to transfer data on USB, flushing is delayed until after the transfer is complete. The FLUSH bit is cleared on reset. It is equivalent to the FLUSH bit in the RXC0 register.
0 – Writing 0 has no effect.
1 – Writing 1 flushed the FIFOs.

IGN_IN — When the Ignore IN Tokens bit is set, the endpoint will ignore any IN tokens directed to its configured address.
0 – Do not ignore IN tokens.
1 – Ignore IN tokens.

16.3.27 Transmit Data 0 Register (TXD0)

Data written to the TXD0 register is copied into the FIFO of Endpoint 0 at the current location of the transmit write pointer. The register allows write-only access from the CPU bus.

7	0
TXFD	

TXFD — The Transmit FIFO Data Byte is used to load the transmit FIFO. Software is expected to write only the packet payload data. The PID and CRC16 are created automatically.

16.3.28 Receive Status 0 Register (RXS0)

The RXS0 register indicates status conditions for the bidirectional Control Endpoint 0. To receive a SETUP packet after receiving a zero length OUT/SETUP packet, there are two copies of this register in hardware. One holds the receive status of a zero length packet, and another holds the status of the next SETUP packet with data. If a zero length packet is followed by a SETUP packet, the first read of this register indicates the status of the zero length packet (with RX_LAST set and RCOUNT clear), and the second read indicates the status of the SETUP packet. This register provides read-only access from the CPU bus. After reset it is clear.

7	6	5	4	3	0
Res.	SETUP	TOGGLE	RX_LAST	RCOUNT	

RCOUNT — The Receive Count field reports the number of bytes presently in the RX FIFO. This number is never larger than 8 for Endpoint 0.

RX_LAST — The Receive Last Bytes bit indicates that an ACK was sent on completion of a successful receive operation. This bit is unchanged for zero-length packets. It is cleared when this register is read.
0 – No ACK was sent.
1 – An ACK was sent.

TOGGLE — The Toggle bit reports the PID used when receiving the packet. When clear, this bit indicates that the last successfully received packet had a DATA0 PID. When set, this bit indicates that the packet had a DATA1 PID. This bit is unchanged for zero-length packets. It is cleared when this register is read.
0 – DATA0 PID was used.
1 – DATA1 PID was used.

SETUP — The Setup bit indicates that the setup packet has been received. This bit is unchanged for zero-length packets. It is cleared when this register is read.
0 – Setup packet has not been received.
1 – Setup packet has been received.

16.3.29 Receive Command 0 Register (RXC0)

The RXC0 register controls the mandatory Endpoint 0 when used in receive direction. This register provides read/write access from the CPU bus. It is clear after reset.

7	4	3	2	1	0
Reserved		FLUSH	IGN_SETUP	IGN_OUT	RX_EN

RX_EN — The Receive Enable bit enables receiving packets. OUT packet reception is disabled after every data packet is received, or when a STALL handshake is returned in response to an OUT token. The RX_EN bit must be set to re-enable data reception. Reception of SETUP packets is always enabled. In the case of back-to-back SETUP packets (for a given endpoint) where a valid SETUP packet is received with no other intervening non-SETUP tokens, the Endpoint Controller discards the new SETUP packet and returns an ACK handshake. If any other reasons prevent the Endpoint Controller from accepting the SETUP packet, it must not generate a handshake. This allows recovery from a condition where the ACK of the first SETUP token was lost by the host.
0 – Receive disabled.
1 – Receive enabled.

IGN_OUT — The Ignore OUT Tokens bit controls whether OUT tokens are ignored. When this bit is set, the endpoint ignores any OUT tokens directed to its configured address.
0 – Do not ignore OUT tokens.
1 – Ignore OUT tokens.

IGN_SETUP — The Ignore SETUP Tokens bit controls whether SETUP tokens are ignored. When this bit is set, the endpoint ignores any SETUP tokens directed to its configured address.
0 – Do not ignore SETUP tokens.
1 – Ignore SETUP tokens.

Obsolete

FLUSH — Writing 1 to the Flush bit flushes all data from the control endpoint FIFOs, resets the endpoint to Idle state, clears the FIFO read and write pointer, and then clears itself. If the endpoint is currently using FIFO0 to transfer data on USB, flushing is delayed until after the transfer is done. This bit is cleared on reset. This bit is equivalent to FLUSH in the TXC0 register.
0 – Writing 0 has no effect.
1 – Writing 1 flushes the FIFOs.

16.3.30 Receive Data 0 Register (RXD0)

Reading the RXD0 register returns the data located at the current position of the receive read pointer of the Endpoint 0 FIFO. The register allows read-only access from the CPU bus. After reset, reading this register returns undefined data.

7	0
RXFD7:0	

RXFD — The Receive FIFO Data Byte is used to unload the FIFO. Software should expect to read only the packet payload data. The PID and CRC16 are removed from the incoming data stream automatically.

16.3.31 Endpoint Control Register n (EPCn)

Each unidirectional endpoint has an EPCn register. The format of the EPCn registers is defined below. These registers provide read/write access from the CPU bus. After reset, the EPCn registers are clear.

7	6	5	4	3	0
STALL	Res.	ISO	EP_EN	EP	

EP — The Endpoint Address field holds the endpoint address.

EP_EN — When the Endpoint Enable bit is set, the EP[3:0] field is used in address comparison, together with the AD[6:0] field in the FAR register. When clear, the endpoint does not respond to any token on the USB bus. (The AD_EN bit in the FAR register is the global address compare enable for the USB node. If it is clear, the device does not respond to any address, without regard to the EP_EN state.)
0 – Address comparison is disabled.
1 – If the AD_EN bit is also set, address comparison is enabled.

ISO — When the Isochronous bit is set, the endpoint is isochronous. This implies that no NAK is sent if the endpoint is not ready but enabled; i.e. if an IN token is received and no data is available in the FIFO to transmit, or if an OUT token is received and the FIFO is full since there is no USB handshake for isochronous transfers.
0 – Isochronous mode disabled.
1 – Isochronous mode enabled.

STALL — The Stall bit can be used to enable STALL handshakes under the following conditions:
- The transmit FIFO is enabled and an IN token is received.
- The receive FIFO is enabled and an OUT token is received.

A SETUP token does not cause a STALL handshake to be generated when this bit is set.
0 – Disable STALL handshakes.
1 – Enable STALL handshakes.

16.3.32 Transmit Status Register n (TXSn)

Each of the three transmit endpoints has a TXSn register. The format of the TXSn registers is given below. The registers provide read-only access from the CPU bus. They are loaded with 1Fh at reset.

7	6	5	4	0
TX_URUN	ACK_STAT	TX_DONE	TCOUNT	

TCOUNT — The Transmission Count field reports the number of empty bytes available in the FIFO. If this number is greater than 31, a value of 31 is reported.

TX_DONE — When set, the Transmission Done bit indicates that the endpoint responded to a USB packet. Three conditions can cause this bit to be set:
- A data packet completed transmission in response to an IN token with non-ISO operation.
- The endpoint sent a STALL handshake in response to an IN token.
- A scheduled ISO frame was transmitted or discarded.

This bit is cleared when this register is read.

Obsolete

ACK_STAT The Acknowledge Status bit is valid when the TX_DONE bit is set. The meaning of the ACK_STAT bit differs depending on whether ISO or non-ISO operation is used (as selected by the ISO bit in the EPCn register).

- *Non-Isochronous mode*—This bit indicates the acknowledge status (from the host) about the ACK for the previously sent packet. This bit itself is set when an ACK is received; otherwise, it is clear.
- *Isochronous mode*—This bit is set if a frame number LSB match occurs (see Section 16.3.33), and data was sent in response to an IN token. Otherwise, this bit is cleared, the FIFO is flushed, and TX_DONE is set.

The ACK_STAT bit is cleared when this register is read.

TX_URUN The Transmit FIFO Underrun indicates whether the transmit FIFO became empty during a transmission, and no new data was written to the FIFO. If so, the Media Access Controller (MAC) forces a bit stuff error followed by an EOP. This bit is cleared when this register is read.

0 – No transmit FIFO underrun event occurred.
1 – Transmit FIFO underrun event occurred.

16.3.33 Transmit Command Register n (TXCn)

Each of the transmit endpoints (1, 3, and 5) has a Transmit Command Register, TXCn. These registers provide read/write access from the CPU bus. After reset the registers are clear.

7	6	5	4	3	2	1	0
IGN_ISOMSK	TFWL		RFF	FLUSH	TOGGLE	LAST	TX_EN

TX_EN The Transmission Enable bit enables data transmission from the FIFO. It is cleared by hardware after transmitting a single packet or after a STALL handshake in response to an IN token. It must be set by software to start packet transmission.

0 – Transmission disabled.
1 – Transmission enabled.

LAST The Last Byte bit indicates whether the entire packet has been written into the FIFO. This is used especially for streaming data to the FIFO while the actual transmission occurs. If the LAST bit is not set and the transmit FIFO becomes empty during a transmission, a stuff error followed by an EOP is forced on the bus. Zero length packets are indicated by setting this bit without writing any data to the FIFO. The transmit state machine transmits the payload data, CRC16, and the EOP signal before clearing this bit.

0 – Last byte of the packet has not been written to the FIFO.
1 – Last byte of the packet has been written to the FIFO.

TOGGLE The function of the Toggle bit differs depending on whether ISO or non-ISO operation is used (as selected by the ISO bit in the EPCn register).

- *Non-Isochronous mode*—The TOGGLE bit specifies the PID used when transmitting the packet. A value of 0 causes a DATA0 PID to be generated, while a value of 1 causes a DATA1 PID to be generated.
- *Isochronous mode*—The TOGGLE bit and the LSB of the frame counter (FNL0) act as a mask for the TX_EN bit to allow pre-queueing of packets to specific frame numbers. (I.e. transmission is enabled only if bit 0 in the FNL register is set to TOGGLE.) If an IN token is not received while this condition is true, the contents of the FIFO are flushed with the next SOF. If the endpoint is set to ISO, data is always transferred with a DATA0 PID.

This bit is not altered by hardware.

FLUSH Writing 1 to the Flush bit flushes all data from the corresponding transmit FIFO, resets the endpoint to Idle state, and clears both the FIFO read and write pointers. If the MAC is currently using the FIFO to transmit, data is flushed after the transmission is complete. After data flushing, this bit is cleared by hardware.

0 – Writing 0 has no effect.
1 – Writing 1 flushes the FIFO.

RFF The Refill FIFO bit is used to repeat a transmission for which no ACK was received. Setting the LAST bit to 1 automatically saves the Transmit Read Pointer (TXRP) to a buffer. When the RFF bit is set, the buffered TXRP is reloaded into the TXRP. This allows software to repeat the last transaction if no ACK was received from the host. If the MAC is currently using the FIFO to transmit, TXRP is reloaded only after the transmission is complete. After reload, this bit is cleared by hardware.

0 – No action.
1 – Reload the saved TXRP.

Obsolete

TFWL — The Transmit FIFO Warning Limit bits specify how many more bytes can be transmitted from the respective FIFO before an underrun condition occurs. If the number of bytes remaining in the FIFO is equal to or less than the selected warning limit, the TXWARN bit in the FWEV register is set. To avoid interrupts caused by setting this bit while the FIFO is being filled before a transmission begins, TXWARN is only set when transmission from the endpoint is enabled (TX_ENn in the TXCn register is set). See Table 40.

Table 40 Transmit FIFO Warning Limit

TFWL	Bytes Remaining in FIFO
00	TFWL disabled
01	≤ 4
10	≤ 8
11	≤ 16

IGN_ISOMSK — The Ignore ISO Mask bit has an effect only if the endpoint is set to be isochronous. If set, this bit disables locking of specific frame numbers with the alternate function of the TOGGLE bit. Therefore, data is transmitted upon reception of the next IN token. If clear, data is only transmitted when FNL0 matches TOGGLE. This bit is cleared after reset.

0 – Data transmitted only when FNL0 matches TOGGLE.
1 – Locking of frame numbers disabled.

16.3.34 Transmit Data Register n (TXDn)

Each transmit FIFO has one TXDn register. Data written to the TXDn register is loaded into the transmit FIFO n at the current location of the transmit write pointer. The TXDn registers provide write-only access from the CPU bus.

7							0
TXFD							

TXFD — The Transmit FIFO Data Byte is used to load the transmit FIFO. Software is expected to write only the packet payload data. The PID and CRC16 are inserted automatically in the transmit data stream.

16.3.35 Receive Status Register n (RXSn)

Each receive endpoint pipe (2, 4, and 6) has one RXSn register with the bits defined below. To allow a SETUP packet to be received after a zero length OUT packet is received, hardware contains two copies of this register. One holds the receive status of a zero length packet, and another holds the status of the next SETUP packet with data. If a zero length packet is followed by a SETUP packet, the first read of this register indicates the zero-length packet status, and the second read, the SETUP packet status. This register provides read-only access from the CPU bus. After reset it is clear.

7	6	5	4	3			0
RX_ERR	SETUP	TOGGLE	RX_LAST	RCOUNT			

RCOUNT — The Receive Counter holds the number of bytes presently in the endpoint receive FIFO. If this number is greater than 15, a value of 15 is actually reported.

RX_LAST — The Receive Last Bytes bit indicates that an ACK was sent on completion of a successful receive operation. This bit is cleared when this register is read.

0 – No ACK was sent.
1 – An ACK was sent.

TOGGLE — The function of the Toggle bit differs depending on whether ISO or non-ISO operation is used (as controlled by the ISO bit in the EPCn register).

- *Non-Isochronous mode*—A value of 0 indicates that the last successfully received packet had a DATA0 PID, while a value of 1 indicates that this packet had a DATA1 PID.
- *Non-Isochronous mode*—This bit reflects the LSB of the frame number (FNL0) after a packet was successfully received for this endpoint.

This bit is cleared by reading the RXSn register.

SETUP — The Setup bit indicates that the setup packet has been received. This bit is cleared when this register is read.

0 – Setup packet has not been received.
1 – Setup packet has been received.

RX_ERR — The Receive Error indicates a media error, such as bit-stuffing or CRC. If this bit is set, software must flush the respective FIFO.

0 – No receive error occurred.
1 – Receive error occurred.

Obsolete

16.3.36 Receive Command Register n (RXCn)

Each of the receive endpoints (2, 4, and 6) has one RXCn register. The registers provide read/write access from the CPU bus. Reading reserved bits returns undefined data. After reset, it is clear.

7	6	5	4	3	2	1	0
Res.	RFWL		Res.	FLUSH	IGN_SETUP	Res.	RX_EN

RX_EN — The Receive Enable bit enables receiving packets. OUT packet reception is disabled after every data packet is received, or when a STALL handshake is returned in response to an OUT token. The RX_EN bit must be set to re-enable data reception. Reception of SETUP packets is always enabled. In the case of back-to-back SETUP packets (for a given endpoint) where a valid SETUP packet is received with no other intervening non-SETUP tokens, the Endpoint Controller discards the new SETUP packet and returns an ACK handshake. If any other reasons prevent the Endpoint Controller from accepting the SETUP packet, it must not generate a handshake.
0 – Receive disabled.
1 – Receive enabled.

IGN_SETUP — The Ignore SETUP Tokens bit controls whether SETUP tokens are ignored. When this bit is set, the endpoint ignores any SETUP tokens directed to its configured address.
0 – Do not ignore SETUP tokens.
1 – Ignore SETUP tokens.

FLUSH — Writing 1 to the Flush bit flushes all data from the corresponding receive FIFO, resets the endpoint to Idle state, and clears the FIFO read and write pointers. If the endpoint is currently using FIFO to receive data, flushing is delayed until after the transfer is complete.
0 – Writing 0 has no effect.
1 – Writing 1 flushes the FIFOs.

RFWL — The Receive FIFO Warning Limit field specifies how many more bytes can be received to the respective FIFO before an overrun condition occurs. If the number of empty bytes remaining in the FIFO is equal to or less than the selected warning limit, the RXWARN bit in the FWEV register is set.

Table 41 Receive FIFO Warning Limit

RFWL	Bytes Remaining in FIFO
00	RFWL disabled
01	≤ 4
10	≤ 8
11	≤ 16

16.3.37 Receive Data Register n (RXD)

Each of the three Receive Endpoint FIFOs has one RXD register. Reading the Receive Data register n returns the data located in the receive FIFO n at the current position of the receive read pointer. These registers provide read-only access from the CPU bus.

7							0
RXFD							

RXFD — The Receive FIFO Data Byte is used to read the receive FIFO. Software should expect to read only the packet payload data. The PID and CRC16 are terminated by the receive state machine.

16.4 TRANSCEIVER INTERFACE

Separate UVCC and UGND pins are provided for the USB transceiver, so it can be powered at the standard USB voltage of 3.3V while the other parts of the device run at other voltages. The USB transceiver is powered by the system, not the USB cable, so these pins must be connected to a power supply and the system ground.

The on-chip USB transceiver does not have enough impedance to meet the USB specification requirement, so external 22-ohm resistors are required in series with the D+ and D- pins, as shown in Figure 29.

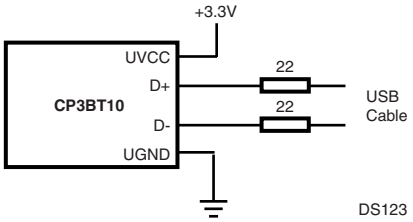

Figure 29. USB Transceiver Interface

Obsolete

17.0 Advanced Audio Interface

The Advanced Audio Interface (AAI) provides a serial synchronous, full duplex interface to codecs and similar serial devices. The transmit and receive paths may operate asynchronously with respect to each other. Each path uses a 3-wire interface consisting of a bit clock, a frame synchronization signal, and a data signal.

The CPU interface can be either interrupt-driven or DMA. If the interface is configured for interrupt-driven I/O, data is buffered in the receive and transmit FIFOs. If the interface is configured for DMA, the data is buffered in registers.

The AAI is functionally similar to a Motorola™ Synchronous Serial Interface (SSI). Compared to a standard SSI implementation, the AAI interface does not support the so-called "On-demand Mode". It also does not allow gating of the shift clocks, so the receive and transmit shift clocks are always active while the AAI is enabled. The AAI also does not support 12- and 24-bit data word length or more than 4 slots (words) per frame. The reduction of supported modes is acceptable, because the main purpose of the AAI is to connect to audio codecs, rather than to other processors (DSPs).

The implementation of a FIFO as a 16-word receive and transmit buffer is an additional feature, which simplifies communication and reduces interrupt load. Independent DMA is provided for each of the four supported audio channels (slots). The AAI also provides special features and operating modes to simplify gain control in an external codec and to connect to an ISDN controller through an IOM-2 compatible interface.

17.1 AUDIO INTERFACE SIGNALS

17.1.1 Serial Transmit Data (STD)

The STD pin is used to transmit data from the serial transmit shift register (ATSR). The STD pin is an output when data is being transmitted and is in high-impedance mode when no data is being transmitted. The data on the STD pin changes on the positive edge of the transmit shift clock (SCK). The STD pin goes into high-impedance mode on the negative edge of SCK of the last bit of the data word to be transmitted, assuming no other data word follows immediately. If another data word follows immediately, the STD pin will not change to the high-impedance mode, instead remaining active. The data is shifted out with the most significant bit (MSB) first.

17.1.2 Serial Transmit Clock (SCK)

The SCK pin is a bidirectional signal that provides the serial shift clock. In asynchronous mode, this clock is used only by the transmitter to shift out data on the positive edge. The serial shift clock may be generated internally or it may be provided by an external clock source. In synchronous mode, the SCK pin is used by both the transmitter and the receiver. Data is shifted out from the STD pin on the positive edge, and data is sampled on the SRD pin on the negative edge of SCK.

17.1.3 Serial Transmit Frame Sync (SFS)

The SFS pin is a bidirectional signal which provides frame synchronization. In asynchronous mode, this signal is used as frame sync only by the transmitter. In synchronous mode, this signal is used as frame sync by both the transmitter and receiver. The frame sync signal may be generated internally, or it may be provided by an external source.

17.1.4 Serial Receive Data (SRD)

The SRD pin is used as an input when data is shifted into the Audio Receive Shift Register (ARSR). In asynchronous mode, data on the SRD pin is sampled on the negative edge of the serial receive shift clock (SRCLK). In synchronous mode, data on the SRD pin is sampled on the negative edge of the serial shift clock (SCK). The data is shifted into ARSR with the most significant bit (MSB) first.

17.1.5 Serial Receive Clock (SRCLK)

The SRCLK pin is a bidirectional signal that provides the receive serial shift clock in asynchronous mode. In this mode, data is sampled on the negative edge of SRCLK. The SRCLK signal may be generated internally or it may be provided by an external clock source. In synchronous mode, the SCK pin is used as shift clock for both the receiver and transmitter, so the SRCLK pin is available for use as a general-purpose port pin or an auxiliary frame sync signal to access multiple slave devices (e.g. codecs) within a network (see Network mode).

17.1.6 Serial Receive Frame Sync (SRFS)

The SRFS pin is a bidirectional signal that provides frame synchronization for the receiver in asynchronous mode. The frame sync signal may be generated internally, or it may be provided by an external source. In synchronous mode, the SFS signal is used as the frame sync signal for both the transmitter and receiver, so the SRFS pin is available for use as a general-purpose port pin or an auxiliary frame sync signal to access multiple slave devices (e.g. codecs) within a network (see Network mode).

17.2 AUDIO INTERFACE MODES

There are two clocking modes: asynchronous mode and synchronous mode. These modes differ in the source and timing of the clock signals used to transfer data. When the AAI is generating the bit shift clock and frame sync signals internally, synchronous mode must be used. In asynchronous mode, an external frame sync signal must be used.

There are two framing modes: normal mode and network mode. In normal mode, one word is transferred per frame. In network mode, up to four words are transferred per frame. A word may be 8 or 16 bits. The part of the frame which carries a word is called a slot. Network mode supports multiple external devices sharing the interface, in which each device is assigned its own slot. Separate frame sync signals are provided, so that each device is triggered to send or receive its data during its assigned slot.

Obsolete

17.2.1 Asynchronous Mode

In asynchronous mode, the receive and transmit paths of the audio interface operate independently, with each path using its own bit clock and frame sync signal. Independent clocks for receive and transmit are only used when the bit clock and frame sync signal are supplied externally. If the bit clock and frame sync signals are generated internally, both paths derive their clocks from the same set of clock prescalers.

17.2.2 Synchronous Mode

In synchronous mode, the receive and transmit paths of the audio interface use the same shift clock and frame sync signal. The bit shift clock and frame sync signal for both paths are derived from the same set of clock prescalers.

17.2.3 Normal Mode

In normal mode, each rising edge on the frame sync signal marks the beginning of a new frame and also the beginning of a new slot. A slot does not necessarily occupy the entire frame. (A frame can be longer than the data word transmitted after the frame sync pulse.) Typically, a codec starts transmitting a fixed length data word (e.g. 8-bit log PCM data) with the frame sync signal, then the codec's transmit pin returns to the high-impedance state for the remainder of the frame.

The Audio Receive Shift Register (ARSR) de-serializes received on the SRD pin (serial receiver data). Only the data sampled after the frame sync signal are treated as valid. If the interface is interrupt-driven, valid data bits are transferred from the ARSR to the receive FIFO. If the interface is configured for DMA, the data is transferred to the receive DMA register 0 (ARDR0).

The serial transmit data (STD) pin is only an active output while data is shifted out. After the defined number of data bits have been shifted out, the STD pin returns to the high-impedance state.

For operation in normal mode, the Slot Count Select bits (SCS[1:0]) in the Global Configuration register (AGCR) must be loaded with 00b (one slot per frame). In addition, the Slot Assignment bits for receive and transmit must be programmed to select slot 0.

If the interface is configured for DMA, the DMA slot assignment bits must also be programmed to select slot 0. In this case, the audio data is transferred to or from the receive or transmit DMA register 0 (ARDR0/ATDR0).

Figure 30 shows the frame timing while operating in normal mode with a long frame sync interval.

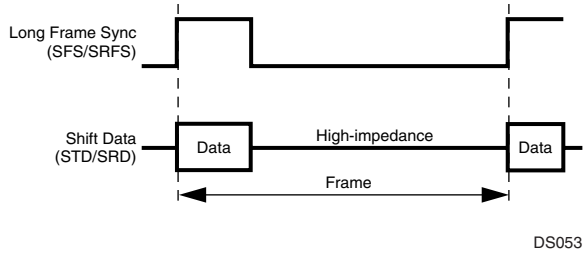

Figure 30. Normal Mode Frame

IRQ Support

If the receiver interface is configured for interrupt-driven I/O (RXDSA0 = 0), all received data are loaded into the receive FIFO. An IRQ is asserted as soon as the number of data bytes or words in the receive FIFO is greater than a programmable warning limit.

If the transmitter interface is configured for interrupt-driven I/O (TXDSA0 = 0), all data to be transmitted is read from the transmit FIFO. An IRQ is asserted as soon as the number data bytes or words available in the transmit FIFO is equal or less than a programmable warning limit.

DMA Support

If the receiver interface is configured for DMA (RXDSA0 = 1), received data is transferred from the ARSR into the DMA receive buffer 0 (ARDR0). A DMA request is asserted when the ARDR0 register is full. If the transmitter interface is configured for DMA (TXDSA0 = 1), data to be transmitted are read from the DMA transmit buffer 0 (ATDR0). A DMA request is asserted to the DMA controller when the ATDR0 register is empty.

Figure 31 shows the data flow for IRQ and DMA mode in normal Mode.

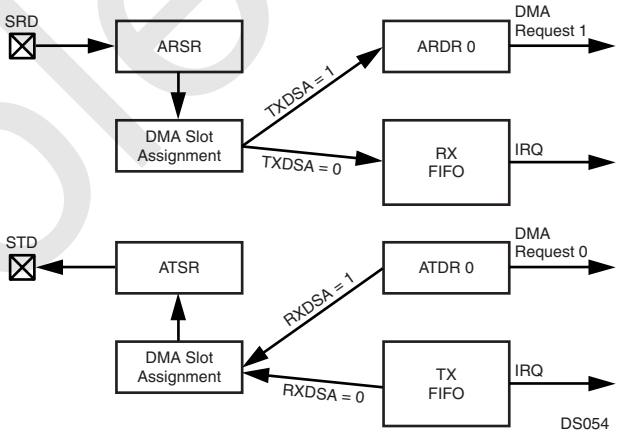

Figure 31. IRQ/DMA Support in Normal Mode

Network Mode

In network mode, each frame is composed of multiple slots. Each slot may transfer 8 or 16 bits. All of the slots in a frame must have the same length. In network mode, the sync signal marks the beginning of a new frame. Only frames with up to four slots are supported by this audio interface.

More than two devices can communicate within a network using the same clock and data lines. The devices connected to the same bus use a time-multiplexed approach to share access to the bus. Each device has certain slots assigned to it, in which only that device is allowed to transfer data. One master device provides the bit clock and the frame sync signal(s). On all other (slave) devices, the bit clock and frame sync pins are inputs.

Up to four slots can be assigned to the interface, as it supports up to four slots per frame. Any other slots within the frame are reserved for other devices.

obsolete

The transmitter only drives data on the STD pin during slots which have been assigned to this interface. During all other slots, the STD output is in high-impedance mode, and data can be driven by other devices. The assignment of slots to the transmitter is specified by the Transmit Slot Assignment bits (TXSA) in the ATCR register. It can also be specified whether the data to be transmitted is transferred from the transmit FIFO or the corresponding DMA transmit register. There is one DMA transmit register (ATDRn) for each of the maximum four data slots. Each slot can be configured independently.

On the receiver side, only the valid data bits which were received during the slots assigned to this interface are copied into the receive FIFO or DMA registers. The assignment of slots to the receiver is specified by the Receive Slot Assignment bits (RXSA) in the ATCR register. It can also be specified whether the received data is copied into the receive FIFO or into the corresponding DMA receive register. There is one DMA receive register (ARDRn) for each of the maximum four data slots. Each slot may be configured individually.

Figure 32 shows the frame timing while operating in network mode with four slots per frame, slot 1 assigned to the interface, and a long frame sync interval.

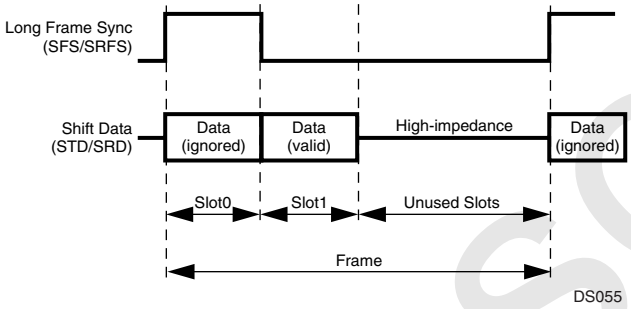

Figure 32. Network Mode Frame

IRQ Support

If DMA is not enabled for a receive slot n (RXDSAn = 0), all data received in this slot is loaded into the receive FIFO. An IRQ is asserted as soon as the number of data bytes or words in the receive FIFO is greater than a configured warning limit.

If DMA is not enabled for a transmit slot n (TXDSAn = 0), all data to be transmitted in this slot are read from the transmit FIFO. An IRQ is asserted as soon as the number data bytes or words available in the transmit FIFO is equal or less than a configured warning limit.

DMA Support

If DMA support is enabled for a receive slot n (RXDSA0 = 1), all data received in this slot is only transferred from the ARSR into the corresponding DMA receive register (ARDRn). A DMA request is asserted when the ARDRn register is full.

If DMA is enabled for a transmit slot n (TXDSAn = 1), all data to be transmitted in slot n are read from the corresponding DMA transmit register (ATDRn). A DMA request is asserted to the DMA controller when the ATDRn register is empty.

Figure 33 illustrates the data flow for IRQ and DMA support in network mode, using four slots per frame and DMA support enabled for slots 0 and 1 in receive and transmit direction.

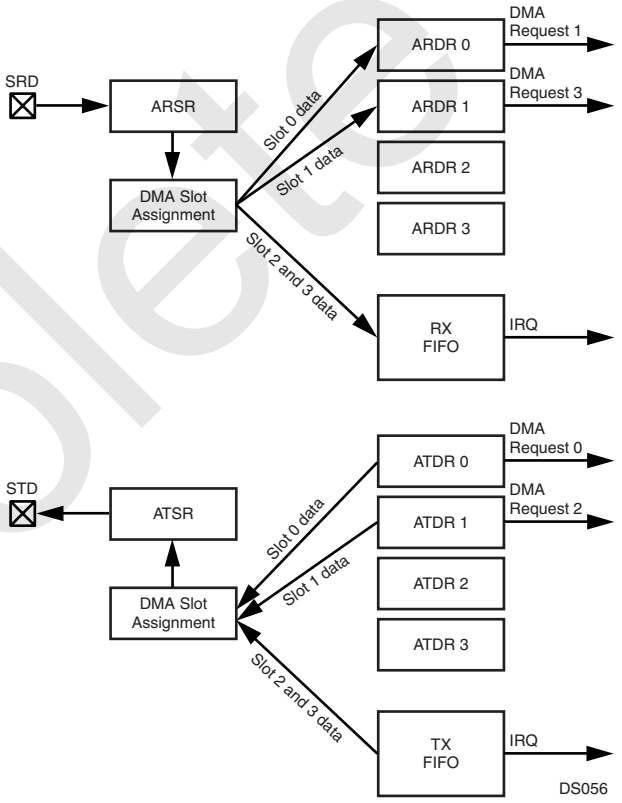

Figure 33. IRQ/DMA Support in Network Mode

If the interface operates in synchronous mode, the receiver uses the transmit bit clock (SCK) and transmit frame sync signal (SFS). This allows the pins used for the receive bit clock (SRCLK) and receive frame sync (SRFS) to be used as additional frame sync signals in network mode. The extra frame sync signals are useful when the audio interface communicates to more than one codec, because codecs typically start transmission immediately after the frame sync pulse. The SRCLK pin is driven with a frame sync pulse at the beginning of the second slot (slot 1), and the SRFS pin is driven with a frame sync pulse at the beginning of slot 2. Figure 34 shows a frame timing diagram for this configuration, using the additional frame sync signals on SRCLK and SRFS to address up to three devices.

Obsolete

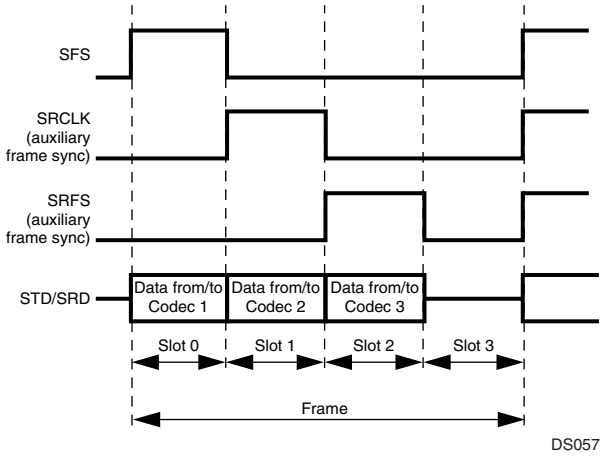

Figure 34. Accessing Three Devices in Network Mode

17.3 BIT CLOCK GENERATION

An 8-bit prescaler is provided to divide the audio interface input clock down to the required bit clock rate. Software can choose between two input clock sources, a primary and a secondary clock source.

On the CP3BT10, the two optional input clock sources are the 12-MHz Aux1 clock (also used for the Bluetooth LLC) and the 48-MHz PLL output clock (also used by the USB node). The input clock is divided by the value of the prescaler BCPRS[7:0] + 1 to generate the bit clock.

The bit clock rate f_{bit} can be calculated by the following equation:

$f_{bit} = n \times f_{Sample} \times$ Data Length

n = Number of Slots per Frame

f_{Sample} = Sample Frequency in Hz

Data Length = Length of data word in multiples of 8 bits

The ideal required prescaler value P_{ideal} can be calculated as follows:

$P_{ideal} = f_{Audio\ In} / f_{bit}$

The real prescaler must be set to an integer value, which should be as close as possible to the ideal prescaler value, to minimize the bit clock error, f_{bit_error}.

f_{bit_error} [%] = $(f_{bit} - f_{Audio\ In}/P_{real}) / f_{bit} \times 100$

Example:

The audio interface is used to transfer 13-bit linear PCM data for one audio channel at a sample rate of 8k samples per second. The input clock of the audio interface is 12 MHz. Furthermore, the codec requires a minimum bit clock of 256 kHz to operate properly. Therefore, the number of slots per frame must be set to 2 (network mode) although actually only one slot (slot 0) is used. The codec and the audio interface will put their data transmit pins in TRI-STATE mode after the PCM data word has been transferred. The required bit clock rate f_{bit} can be calculated by the following equation:

$f_{bit} = n \times f_{Sample} \times$ Data Length = 2 × 8 kHz × 16 = 256 kHz

The ideal required prescaler value P_{ideal} can be calculated as follows:

$P_{ideal} = f_{Audio\ In} / f_{bit}$ = 12 MHz / 256 kHz = 46.875

Therefore, the real prescaler value is 47. This results in a bit clock error equal to:

$f_{bit_error} = (f_{bit} - f_{Audio\ In}/P_{real}) / f_{bit} \times 100$

= (256 kHz - 12 MHz/47) / 256 kHz × 100 = 0.27%

17.4 FRAME CLOCK GENERATION

The clock for the frame synchronization signals is derived from the bit clock of the audio interface. A 7-bit prescaler is used to divide the bit clock to generate the frame sync clock for the receive and transmit operations. The bit clock is divided by FCPRS + 1. In other words, the value software must write into the ACCR.FCPRS field is equal to the bit number per frame minus one. The frame may be longer than the valid data word but it must be equal to or larger than the 8- or 16-bit word. Even if 13-, 14-, or 15-bit data is being used, the frame width must always be at least 16 bits wide.

In addition, software can specify the length of a long frame sync signal. A long frame sync signal can be either 6, 13, 14, 15, or 16 bits long, depending on the external codec being used. The frame sync length can be configured by the Frame Sync Length field (FSL) in the AGCR register.

17.5 AUDIO INTERFACE OPERATION

17.5.1 Clock Configuration

The Aux1 clock (generated by the Clock module described in Section 11.8) must be configured, because it is the time base for the AAI module. Software must write an appropriate divisor to the ACDIV1 field of the PRSAC register to provide a 12 MHz input clock. Software also must enable the Aux1 clock by setting the ACE1 bit in the CRCTRL register. For example:

```
PRSAC &= 0xF0;
// Set Aux1 prescaler to 1 (F = 12 MHz)
CRCTRL |= ACE1; // Enable Aux1 clk
```

17.5.2 Interrupts

The interrupt logic of the AAI combines up to four interrupt sources and generates one interrupt request signal to the Interrupt Control Unit (ICU).

The four interrupt sources are:

- RX FIFO Overrun - ASCR.RXEIP = 1
- RX FIFO Almost Full (Warning Level) - ASCR.RXIP = 1
- TX FIFO Under run - ASCR.TXEIP = 1
- TX FIFO Almost Empty (Warning Level) - ASCR.TXIP=1

In addition to the dedicated input to the ICU for handling these interrupt sources, the Serial Frame Sync (SFS) signal is an input to the MIWU (see Section 13.0), which can be programmed to generate edge-triggered interrupts.

Obsolete

Figure 35 shows the interrupt structure of the AAI.

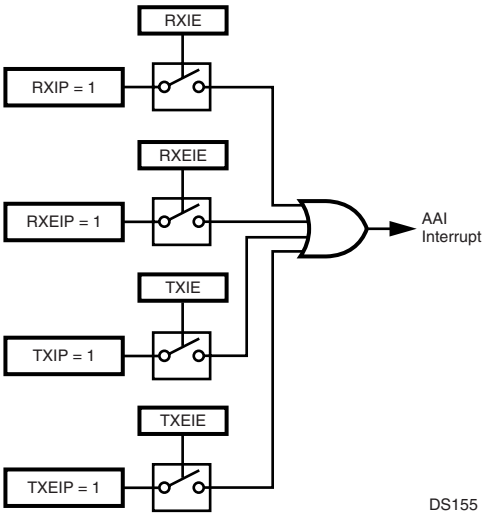

Figure 35. AAI Interrupt Structure

17.5.3 Normal Mode

In normal mode, each frame sync signal marks the beginning of a new frame and also the beginning of a new slot, since each frame only consists of one slot. All 16 receive and transmit FIFO locations hold data for the same (and only) slot of a frame. If 8-bit data are transferred, only the low byte of each 16-bit FIFO location holds valid data.

17.5.4 Transmit

Once the interface has been enabled, transmit transfers are initiated automatically at the beginning of every frame. The beginning of a new frame is identified by a frame sync pulse. Following the frame sync pulse, the data is shifted out from the ATSR to the STD pin on the positive edge of the transmit data shift clock (SCK).

DMA Operation

When a complete data word has been transmitted through the STD pin, a new data word is reloaded from the transmit DMA register 0 (ATDR0). A DMA request is asserted when the ATDR0 register is empty. If a new data word must be transmitted while the ATDR0 register is still empty, the previous data will be re-transmitted.

FIFO Operation

When a complete data word has been transmitted through the STD pin, a new data word is loaded from the transmit FIFO from the current location of the Transmit FIFO Read Pointer (TRP). After that, the TRP is automatically incremented by 1.

A write to the Audio Transmit FIFO Register (ATFR) results in a write to the transmit FIFO at the current location of the Transmit FIFO Write Pointer (TWP). After every write operation to the transmit FIFO, TWP is automatically incremented by 1.

When the TRP is equal to the TWP and the last access to the FIFO was a read operation (a transfer to the ATSR), the transmit FIFO is empty. When an additional read operation from the FIFO to ATSR is performed (while the FIFO is already empty), a transmit FIFO underrun occurs. In this event, the read pointer (TRP) will be decremented by 1 (incremented by 15) and the previous data word will be transmitted again. A transmit FIFO underrun is indicated by the TXU bit in the Audio Interface Transmit Status and Control Register (ATSCR). Also, no transmit interrupt will be generated (even if enabled).

When the TRP is equal to the TWP and the last access to the FIFO was a write operation (to the ATFR), the FIFO is full. If an additional write to ATFR is performed, a transmit FIFO overrun occurs. This error condition is not prevented by hardware. Software must ensure that no transmit overrun occurs.

The transmit frame synchronization pulse on the SFS pin and the transmit shift clock on the SCK pin may be generated internally, or they can be supplied by an external source.

17.5.5 Receive

At the receiver, the received data on the SRD pin is shifted into ARSR on the negative edge of SRCLK (or SCK in synchronous mode), following the receive frame sync pulse, SRFS (or SFS in synchronous mode).

DMA Operation

When a complete data word has been received through the SRD pin, the new data word is copied to the receive DMA register 0 (ARDR0). A DMA request is asserted when the ARDR0 register is full. If a new data word is received while the ARDR0 register is still full, the ARDR0 register will be overwritten with the new data.

FIFO Operation

When a complete word has been received, it is transferred to the receive FIFO at the current location of the Receive FIFO Write Pointer (RWP). Then, the RWP is automatically incremented by 1.

A read from the Audio Receive FIFO Register (ARFR) results in a read from the receive FIFO at the current location of the Receive FIFO Read Pointer (RRP). After every read operation from the receive FIFO, the RRP is automatically incremented by 1.

When the RRP is equal to the RWP and the last access to the FIFO was a copy operation from the ARFR, the receive FIFO is full. When a new complete data word has been shifted into ARSR while the receive FIFO was already full, the shift register overruns. In this case, the new data in the ARSR will not be copied into the FIFO and the RWP will not be incremented. A receive FIFO overrun is indicated by the RXO bit in the Audio Interface Receive Status and Control Register (ARSCR). No receive interrupt will be generated (even if enabled).

When the RWP is equal to the TWP and the last access to the receive FIFO was a read from the ARFR, a receive FIFO underrun has occurred. This error condition is not prevented by hardware. Software must ensure that no receive underrun occurs.

The receive frame synchronization pulse on the SRFS pin (or SFS in synchronous mode) and the receive shift clock on the SRCLK (or SCK in synchronous mode) may be gener-

Obsolete

ated internally, or they can be supplied by an external source.

17.5.6 Network Mode

In network mode, each frame sync signal marks the beginning of new frame. Each frame can consist of up to four slots. The audio interface operates in a similar way to normal mode, however, in network mode the transmitter and receiver can be assigned to specific slots within each frame as described below.

17.5.7 Transmit

The transmitter only shifts out data during the assigned slot. During all other slots the STD output is in TRI-STATE mode.

DMA Operation

When a complete data word has been transmitted through the STD pin, a new data word is reloaded from the corresponding transmit DMA register n (ATDRn). A DMA request is asserted when ATDRn is empty. If a new data word must be transmitted in a slot n while ATDRn is still empty, the previous slot n data will be retransmitted.

FIFO Operation

When a complete data word has been transmitted through the STD pin, a new data word is reloaded from the transmit FIFO from the current location of the Transmit FIFO Read Pointer (TRP). After that, the TRP is automatically incremented by 1. Therefore, the audio data to be transmitted in the next slot of the frame is read from the next FIFO location.

A write to the Audio Transmit FIFO Register (ATFR) results in a write to the transmit FIFO at the current location of the Transmit FIFO Write Pointer (TWP). After every write operation to the transmit FIFO, the TWP is automatically incremented by 1.

When the TRP is equal to the TWP and the last access to the FIFO was a read operation (transfer to the ATSR), the transmit FIFO is empty. When an additional read operation from the FIFO to the ATSR is performed (while the FIFO is already empty), a transmit FIFO underrun occurs. In this case, the read pointer (TRP) will be decremented by 1 (incremented by 15) and the previous data word will be transmitted again. A transmit FIFO underrun is indicated by the TXU bit in the Audio Interface Transmit Status and Control Register (ATSCR). No transmit interrupt will be generated (even if enabled).

If the current TRP is equal to the TWP and the last access to the FIFO was a write operation (to the ATFR), the FIFO is full. If an additional write to the ATFR is performed, a transmit FIFO overrun occurs. This error condition is not prevented by hardware. Software must ensure that no transmit overrun occurs.

The transmit frame synchronization pulse on the SFS pin and the transmit shift clock on the SCK pin may be generated internally, or they can be supplied by an external source.

17.5.8 Receive

The receive shift register (ARSR) receives data words of all slots in the frame, regardless of the slot assignment of the interface. However, only those ARSR contents are transferred to the receive FIFO or DMA receive register which were received during the assigned time slots. A receive interrupt or DMA request is initiated when this occurs.

DMA Operation

When a complete data word has been received through the SRD pin in a slot n, the new data word is transferred to the corresponding receive DMA register n (ARDRn). A DMA request is asserted when the ARDRn register is full. If a new slot n data word is received while the ARDRn register is still full, the ARDRn register will be overwritten with the new data.

FIFO Operation

When a complete word has been received, it is transferred to the receive FIFO at the current location of the Receive FIFO Write Pointer (RWP). After that, the RWP is automatically incremented by 1. Therefore, data received in the next slot is copied to the next higher FIFO location.

A read from the Audio Receive FIFO Register (ARFR) results in a read from the receive FIFO at the current location of the Receive FIFO Read Pointer (RRP). After every read operation from the receive FIFO, the RRP is automatically incremented by 1.

When the RRP is equal to the RWP and the last access to the FIFO was a transfer to the ARFR, the receive FIFO is full. When a new complete data word has been shifted into the ARSR while the receive FIFO was already full, the shift register overruns. In this case, the new data in the ARSR will not be transferred to the FIFO and the RWP will not be incremented. A receive FIFO overrun is indicated by the RXO bit in the Audio Interface Receive Status and Control Register (ARSCR). No receive interrupt will be generated (even if enabled).

When the current RWP is equal to the TWP and the last access to the receive FIFO was a read from ARFR, a receive FIFO underrun has occurred. This error condition is not prevented by hardware. Software must ensure that no receive underrun occurs.

The receive frame synchronization pulse on the SRFS pin (or SFS in synchronous mode) and the receive shift clock on the SRCLK (or SCK in synchronous mode) may be generated internally, or they can be supplied by an external source.

17.6 COMMUNICATION OPTIONS

17.6.1 Data Word Length

The word length of the audio data can be selected to be either 8 or 16 bits. In 16-bit mode, all 16 bits of the transmit and receive shift registers (ATSR and ARSR) are used. In 8-bit mode, only the lower 8 bits of the transmit and receive shift registers (ATSR and ARSR) are used.

17.6.2 Frame Sync Signal

The audio interface can be configured to use either long or short frame sync signals to mark the beginning of a new data frame. If the corresponding Frame Sync Select (FSS) bit in the Audio Control and Status register is clear, the receive and/or transmit path generates or recognizes short frame sync pulses with a length of one bit shift clock period. When these short frame sync pulses are used, the transfer

Obsolete

of the first data bit or the first slot begins at the first positive edge of the shift clock after the negative edge on the frame sync pulse.

If the corresponding Frame Sync Select (FSS) bit in the Audio Control and Status register is set, the receive and/or transmit path generates or recognizes long frame sync pulses. For 8-bit data, the frame sync pulse generated will be 6 bit shift clock periods long, and for 16-bit data the frame sync pulse can be configured to be 13, 14, 15, or 16 bit shift clock periods long. When receiving frame sync, it should be active on the first bit of data and stay active for a least two bit clock periods. It must go low for at least one bit clock period before starting a new frame. When long frame sync pulses are used, the transfer of the first word (first slot) begins at the first positive edge of the bit shift clock after the positive edge of the frame sync pulse. Figure 36 shows examples of short and long frame sync pulses.

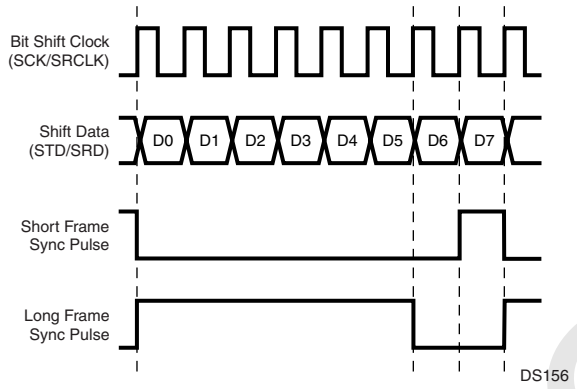

Figure 36. Short and Long Frame Sync Pulses

Some codecs require an inverted frame sync signal. This is available by setting the Inverted Frame Sync bit in the AGCR register.

17.6.3 Audio Control Data

The audio interface provides the option to fill a 16-bit slot with up to three data bits if only 13, 14, or 15 PCM data bits are transmitted. These additional bits are called audio control data and are appended to the PCM data stream. The AAI can be configured to append either 1, 2, or 3 audio control bits to the PCM data stream. The number of audio data bits to be used is specified by the 2-bit Audio Control On (ADMACR. ACO[1:0]) field. If the ACO field is not equal to 0, the specified number of bits are taken from the Audio Control Data field (ADMACR. ACD[2:0]) and appended to the data stream during every transmit operation. The ADC[0] bit is the first bit added to the transmit data stream after the last PCM data bit. Typically, these bits are used for gain control, if this feature is supported by the external PCM codec.Figure 37 shows a 16-bit slot comprising a 13-bit PCM data word plus three audio control bits.

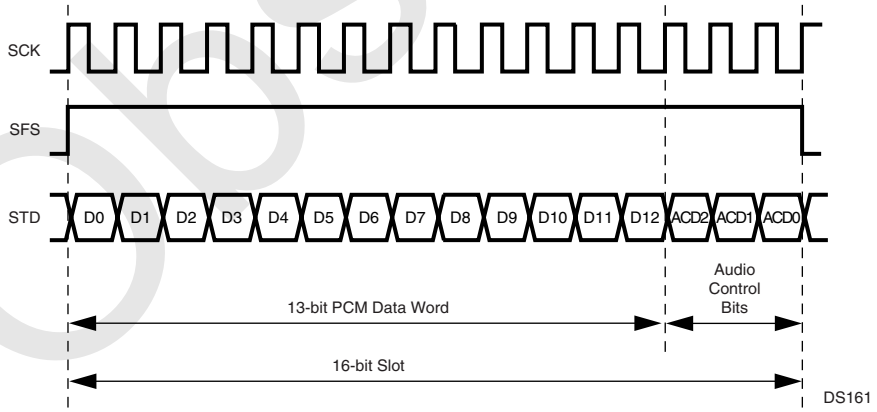

Figure 37. Audio Slot with Audio Control Data

Obsolete

17.6.4 IOM-2 Mode

The AAI can operate in a special IOM-2 compatible mode to allow to connect to an external ISDN controller device. In this IOM-2 mode, the AAI can only operate as a slave, i.e. the bit clock and frame sync signal is provided by the ISDN controller. The AAI only supports the B1 and B2 data of the IOM-2 channel 0, but ignores the other two IOM-2 channels. The AAI handles the B1 and B2 data as one 16-bit data word.

The IOM-2 interface has the following properties:

- Bit clock of 1536 kHz (output from the ISDN controller)
- Frame repetition rate of 8 ksps (output from the ISDN controller)
- Double-speed bit clock (one data bit is two bit clocks wide)
- B1 and B2 data use 8-bit log PCM format
- Long frame sync pulse

Figure 38 shows the structure of an IOM-2 Frame.

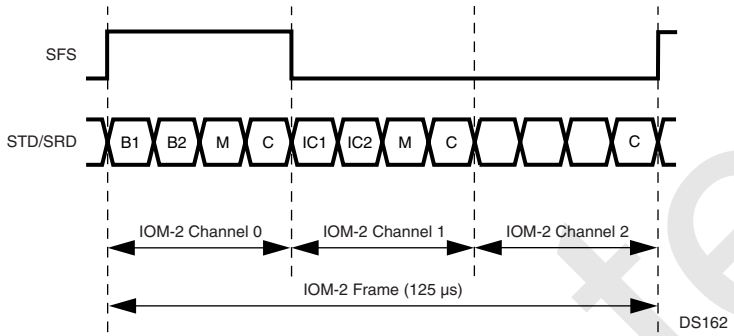

Figure 38. IOM-2 Frame Structure

Figure 39 shows the connections between an ISDN controller and a CP3BT10 using a standard IOM-2 interface for the B1/B2 data communication and the external bus interface (IO Expansion) for controlling the ISDN controller.

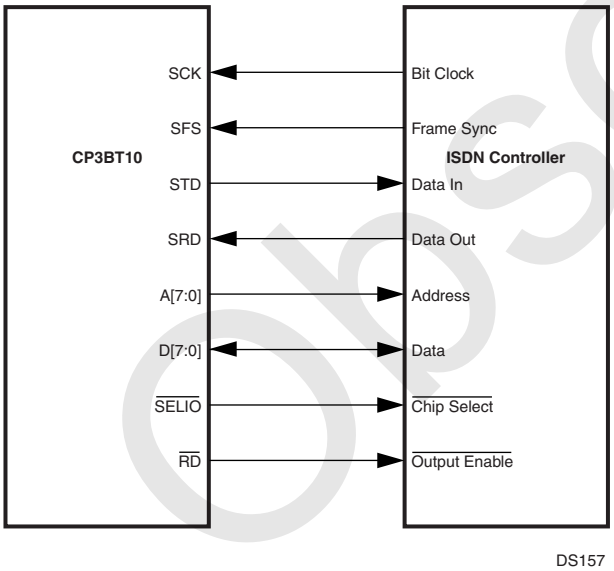

Figure 39. CP3BT10/ISDN Controller Connections

To connect the AAI to an ISDN controller through an IOM-2 compatible interface, the AAI needs to be configured in this way:

- The AAI must be in IOM-2 Mode (AGCR.IOM2 = 1).
- The AAI operates in synchronous mode (AGCR.ASS = 0).
- The AAI operates as a slave, therefore the bit clock and frame sync source selection must be set to external (ACGR.IEFS = 1, ACGR.IEBC = 1).
- The frame sync length must be set to long frame sync (ACGR.FSS = 1).
- The data word length must be set to 16-bit (AGCR.DWL = 1).
- The AAI must be set to normal mode (AGCR.SCS[1:0] = 0).
- The internal frame rate must be 8 ksps (ACCR = 00BE).

17.6.5 Loopback Mode

In loopback mode, the STD and SRD pins are internally connected together, so data shifted out through the ATSR register will be shifted into the ARSR register. This mode may be used for development, but it also allows testing the transmit and receive path without external circuitry, for example during Built-In-Self-Test (BIST).

Obsolete

17.6.6 Freeze Mode

The audio interface provides a FREEZE input, which allows to freeze the status of the audio interface while a development system examines the contents of the FIFOs and registers.

When the FREEZE input is asserted, the audio interface behaves as follows:

- The receive FIFO or receive DMA registers are not updated with new data.
- The receive status bits (RXO, RXE, RXF, and RXAF) are not changed, even though the receive FIFO or receive DMA registers are read.
- The transmit shift register (ATSR) is not updated with new data from the transmit FIFO or transmit DMA registers.
- The transmit status bits (TXU, TXF, TXE, and TXAE) are not changed, even though the transmit FIFO or transmit DMA registers are written.

The time at which these registers are frozen will vary because they operate from a different clock than the one used to generate the freeze signal.

17.7 AUDIO INTERFACE REGISTERS

Table 42 Audio Interface Registers

Name	Address	Description
ARFR	FF FD40h	Audio Receive FIFO Register
ARDR0	FF FD42h	Audio Receive DMA Register 0
ARDR1	FF FD44h	Audio Receive DMA Register 1
ARDR2	FF FD46h	Audio Receive DMA Register 2
ARDR3	FF FD48h	Audio Receive DMA Register 3
ATFR	FF FD4Ah	Audio Transmit FIFO Register
ATDR0	FF FD4Ch	Audio Transmit DMA Register 0
ATDR1	FF FD4Eh	Audio Transmit DMA Register 1
ATDR2	FF FD50h	Audio Transmit DMA Register 2
ATDR3	FF FD52h	Audio Transmit DMA Register 3
AGCR	FF FD54h	Audio Global Configuration Register
AISCR	FF FD56h	Audio Interrupt Status and Control Register
ARSCR	FF FD58h	Audio Receive Status and Control Register
ATSCR	FF FD5Ah	Audio Transmit Status and Control Register
ACCR	FF FD5Ch	Audio Clock Control Register
ADMACR	FF FD5Eh	Audio DMA Control Register

Obsolete

17.7.1 Audio Receive FIFO Register (ARFR)

The Audio Receive FIFO register shows the receive FIFO location currently addressed by the Receive FIFO Read Pointer (RRP). The receive FIFO receives 8-bit or 16-bit data from the Audio Receive Shift Register (ARSR), when the ARSR is full.

In 8-bit mode, only the lower byte of the ARFR is used, and the upper byte contains undefined data. In 16-bit mode, a 16-bit word is copied from ARSR into the receive FIFO. The CPU bus master has read-only access to the receive FIFO, represented by the ARFR register. After reset, the receive FIFO (ARFR) contains undefined data.

7	0
ARFL	

15	8
ARFH	

ARFL — The Audio Receive FIFO Low Byte shows the lower byte of the receive FIFO location currently addressed by the Receive FIFO Read Pointer (RRP).

ARFH — The Audio Receive FIFO High Byte shows the upper byte of the receive FIFO location currently addressed by the Receive FIFO Read Pointer (RRP). In 8-bit mode, ARFH contains undefined data.

17.7.2 Audio Receive DMA Register n (ARDRn)

The ARDRn register contains the data received within slot n, assigned for DMA support. In 8-bit mode, only the lower 8-bit portion of the ARDRn register is used, and the upper byte contains undefined data. In 16-bit mode, a 16-bit word is transferred from the Audio Receive Shift Register (ARSR) into the ARDRn register. The CPU bus master, typically a DMA controller, has read-only access to the receive DMA registers. After reset, these registers are clear.

7	0
ARDL	

15	8
ARDH	

ARDL — The Audio Receive DMA Low Byte field receives the lower byte of the audio data copied from the ARSR.

ARDH — In 16-bit mode, the Audio Receive DMA High Byte field receives the upper byte of the audio data word copied from ARSR. In 8-bit mode, the ARDH register holds undefined data.

17.7.3 Audio Transmit FIFO Register (ATFR)

The ATFR register shows the transmit FIFO location currently addressed by the Transmit FIFO Write Pointer (TWP). The Audio Transmit Shift Register (ATSR) receives 8-bit or 16-bit data from the transmit FIFO, when the ATSR is empty. In 8-bit mode, only the lower 8-bit portion of the ATSR is used, and the upper byte is ignored (not transferred into the ATSR). In 16-bit mode, a 16-bit word is copied from the transmit FIFO into the ATSR. The CPU bus master has write-only access to the transmit FIFO, represented by the ATFR register. After reset, the transmit FIFO (ATFR) contains undefined data.

7	0
ATFL	

15	8
ATFH	

ATFL — The Audio Transmit Low Byte field represents the lower byte of the transmit FIFO location currently addressed by the Transmit FIFO Write Pointer (TWP).

ATFH — In 16-bit mode, the Audio Transmit FIFO High Byte field represents the upper byte of the transmit FIFO location currently addressed by the Transmit FIFO Write Pointer (TWP). In 8-bit mode, the ATFH field is not used.

17.7.4 Audio Transmit DMA Register n (ATDRn)

The ATDRn register contains the data to be transmitted in slot n, assigned for DMA support. In 8-bit mode, only the lower 8-bit portion of the ATDRn register is used, and the upper byte is ignored (not transferred into the ATSR). In 16-bit mode, the whole 16-bit word is transferred into the ATSR. The CPU bus master, typically a DMA controller, has write-only access to the transmit DMA registers. After reset, these registers are clear.

7	0
ATDL	

15	8
ATDH	

ATDL — The Audio Transmit DMA Low Byte field holds the lower byte of the audio data.

ATDH — In 16-bit mode, the Audio Transmit DMA High Byte field holds the upper byte of the audio data word. In 8-bit mode, the ATDH field is ignored.

Obsolete

17.7.5 Audio Global Configuration Register (AGCR)

The AGCR register controls the basic operation of the interface. The CPU bus master has read/write access to the AGCR register. After reset, this register is clear.

7	6	5	4	3	2	1	0
IEBC	FSS	IEFS	SCS		LPB	DWL	ASS

15	14	13	12	11	10	9	8
CLKEN	AAIEN	IOM2	IFS	FSL		CTF	CRF

ASS — The Asynchronous/Synchronous Mode Select bit controls whether the audio interface operates in Asynchronous or in Synchronous mode. After reset the ASS bit is clear, so the Synchronous mode is selected by default.
0 – Synchronous mode.
1 – Asynchronous mode.

DWL — The Data Word Length bit controls whether the transferred data word has a length of 8 or 16 bits. After reset, the DWL bit is clear, so 8-bit data words are used by default.
0 – 8-bit data word length.
1 – 16-bit data word length.

LPB — The Loop Back bit enables the loop back mode. In this mode, the SRD and STD pins are internally connected. After reset the LPB bit is clear, so by default the loop back mode is disabled.
0 – Loop back mode disabled.
1 – Loop back mode enabled.

SCS — The Slot Count Select field specifies the number of slots within each frame. If the number of slots per frame is equal to 1, the audio interface operates in normal mode. If the number of slots per frame is greater than 1, the interface operates in network mode. After reset all SCS bits are cleared, so by default the audio interface operates in normal mode.

SCS	Number of Slots per Frame	Mode
00	1	Normal mode
01	2	Network mode
10	3	Network mode
11	4	Network mode

IEFS — The Internal/External Frame Sync bit controls, whether the frame sync signal for the receiver and transmitter are generated internally or provided from an external source. After reset, the IEFS bit is clear, so the frame synchronization signals are generated internally by default.
0 – Internal frame synchronization signal.
1 – External frame synchronization signal.

FSS — The Frame Sync Select bit controls whether the interface (receiver and transmitter) uses long or short frame synchronization signals. After reset the FSS bit is clear, so short frame synchronization signals are used by default.
0 – Short (bit length) frame synchronization signal.
1 – Long (word length) frame synchronization signal.

IEBC — The Internal/External Bit Clock bit controls whether the bit clocks for receiver and transmitter are generated internally or provided from an external source. After reset, the IEBC bit is clear, so the bit clocks are generated internally by default.
0 – Internal bit clock.
1 – External bit clock.

CRF — The Clear Receive FIFO bit is used to clear the receive FIFO. When this bit is written with a 1, all pointers of the receive FIFO are set to their reset state. After updating the pointers, the CRF bit will automatically be cleared again.
0 – Writing 0 has no effect.
1 – Writing 1 clears the receive FIFO.

CTF — The Clear Transmit FIFO bit is used to clear the transmit FIFO. When this bit is written with a 1, all pointers of the transmit FIFO are set to their reset state. After updating the pointers, the CTF bit will automatically be cleared again.
0 – Writing 0 has no effect.
1 – Writing 1 clears the transmit FIFO.

FSL — The Frame Sync Length field specifies the length of the frame synchronization signal, when a long frame sync signal (FSS = 1) and a 16-bit data word length (DWL = 1) are used. If an 8-bit data word length is used, long frame syncs are always 6 bit clocks in length.

FSL	Frame Sync Length
00	13 bit clocks
01	14 bit clocks
10	15 bit clocks
11	16 bit clocks

IFS — The Inverted Frame Sync bit controls the polarity of the frame sync signal.
0 – Active-high frame sync signal.
1 – Active-low frame sync signal.

Obsolete

IOM2 The IOM-2 Mode bit selects the normal PCM interface mode or a special IOM-2 mode used to connect to external ISDN controller devices. The AAI can only operate as a slave in the IOM-2 mode, i.e. the bit clock and frame sync signals are provided by the ISDN controller. If the IOM2 bit is clear, the AAI operates in the normal PCM interface mode used to connect to external PCM codecs and other PCM audio devices.
0 – IOM-2 mode disabled.
1 – IOM-2 mode enabled.

AAIEN The AAI Enable bit controls whether the Advanced Audio Interface is enabled. All AAI registers provide read/write access while (CLKEN = 1) AAIEN is clear. The AAIEN bit is clear after reset.
0 – AAI module disabled.
1 – AAI module enabled.

CLKEN The Clock Enable bit controls whether the Advanced Audio Interface clock is enabled. The CLKEN bit must be set to allow access to any AAI register. It must also be set before any other bit of the AGCR can be set. The CLKEN bit is clear after reset.
0 – AAI module clock disabled.
1 – AAI module clock enabled.

17.7.6 Audio Interrupt Status and Control Register (AISCR)

The ASCR register is used to specify the source and the conditions, when the audio interface interrupt is asserted to the Interrupt Control Unit. It also holds the interrupt pending bits and the corresponding interrupt clear bits for each audio interface interrupt source. The CPU bus master has read/write access to the ASCR register. After reset, this register is clear.

7	6	5	4	3	2	1	0
TXEIP	TXIP	RXEIP	RXIP	TXEIE	TXIE	RXEIE	RXIE

15	12	11	10	9	8
Reserved		TXEIC	TXIC	RXEIC	RXIC

RXIE The Receive Interrupt Enable bit controls whether receive interrupts are generated. If the RXIE bit is clear, no receive interrupt will be generated.
0 – Receive interrupt disabled.
1 – Receive interrupt enabled.

RXEIE The Receive Error Interrupt Enable bit controls whether receive error interrupts are generated. Setting this bit enables a receive error interrupt, when the Receive Buffer Overrun (RXOR) bit is set. If the RXEIE bit is clear, no receive error interrupt will be generated.
0 – Receive error interrupt disabled.
1 – Receive error interrupt enabled.

TXIE The Transmit Interrupt Enable bit controls whether transmit interrupts are generated. Setting this bit enables a transmit interrupt, when the Transmit Buffer Almost Empty (TXAE) bit is set. If the TXIE bit is clear, no interrupt will be generated.
0 – Transmit interrupt disabled.
1 – Transmit interrupt enabled.

TXEIE The Transmit Error Interrupt Enable bit controls whether transmit error interrupts are generated. Setting this bit to 1 enables a transmit error interrupt, when the Transmit Buffer Underrun (TXUR) bit is set. If the TXEIE bit is clear, no transmit error interrupt will be generated.
0 – Transmit error interrupt disabled.
1 – Transmit error interrupt enabled.

RXIP The Receive Interrupt Pending bit indicates that a receive interrupt is currently pending. The RXIP bit is cleared by writing a 1 to the RXIC bit. The RXIP bit provides read-only access.
0 – No receive interrupt pending.
1 – Receive interrupt pending.

RXEIP The Receive Error Interrupt Pending bit indicates that a receive error interrupt is currently pending. The RXEIP bit is cleared by writing a 1 to the RXEIC bit. The RXEIP bit provides read-only access.
0 – No receive error interrupt pending.
1 – Receive error interrupt pending.

TXIP The Transmit Interrupt Pending bit indicates that a transmit interrupt is currently pending. The TXIP bit is cleared by writing a 1 to the TXIC bit. The TXIP bit provides read-only access.
0 – No transmit interrupt pending.
1 – Transmit interrupt pending.

TXEIP Transmit Error Interrupt Pending. This bit indicates that a transmit error interrupt is currently pending. The TXEIP bit is cleared by software by writing a 1 to the TXEIC bit. The TXEIP bit provides read-only access.
0 – No transmit error interrupt pending.
1 – Transmit error interrupt pending.

RXIC The Receive Interrupt Clear bit is used to clear the RXIP bit.
0 – Writing a 0 to the RXIC bit is ignored.
1 – Writing a 1 clears the RXIP bit.

RXEIC The Receive Error Interrupt Clear bit is used to clear the RXEIP bit.
0 – Writing a 0 to the RXEIC bit is ignored.
1 – Writing a 1 clears the RXEIP bit.

TXIC The Transmit Interrupt Clear bit is used to clear the TXIP bit.
0 – Writing a 0 to the TXIC bit is ignored.
1 – Writing a 1 clears the TXIP bit.

TXEIC The Transmit Error Interrupt Clear bit is used to clear the TXEIP bit.
0 – Writing a 0 to the TXEIC bit is ignored.
1 – Writing a 1 clears the TXEIP bit.

Obsolete

17.7.7 Audio Receive Status and Control Register (ARSCR)

The ARSCR register is used to control the operation of the receiver path of the audio interface. It also holds bits which report the current status of the receive FIFO. The CPU bus master has read/write access to the ASCR register. At reset, this register is loaded with 0004h.

7 – 4	3	2	1	0
RXSA	RXO	RXE	RXF	RXAF

15 – 12	11 – 8
RXFWL	RXDSA

RXAF The Receive Buffer Almost Full bit is set when the number of data bytes/words in the receive buffer is equal to the specified warning limit.
0 – Receive FIFO below warning limit.
1 – Receive FIFO is almost full.

RXF The Receive Buffer Full bit is set when the receive buffer is full. The RXF bit is set when the RWP is equal to the RRP and the last access was a write to the FIFO.
0 – Receive FIFO is not full.
1 – Receive FIFO full.

RXE The Receive Buffer Empty bit is set when the the RRP is equal to the RWP and the last access to the FIFO was a read operation (read from ARDR).
0 – Receive FIFO is not empty.
1 – Receive FIFO is empty.

RXO The Receive Overflow bit indicates that a receive shift register has overrun. This occurs, when a completed data word has been shifted into ARSR, while the receive FIFO was already full (the RXF bit was set). In this case, the new data in ARSR will not be copied into the FIFO and the RWP will not be incremented. Also, no receive interrupt and DMA request will generated (even if enabled).
0 – No overflow has occurred.
1 – Overflow has occurred.

RXSA The Receive Slot Assignment field specifies which slots are recognized by the receiver of the audio interface. Multiple slots may be enabled. If the frame consists of less than 4 slots, the RXSA bits for unused slots are ignored. For example, if a frame only consists of 2 slots, RXSA bits 2 and 3 are ignored.

The following table shows the slot assignment scheme.

RXSA Bit	Slots Enabled
RXSA0	0
RXSA1	1
RXSA2	2
RXSA3	3

After reset the RXSA field is clear, so software must load the correct slot assignment.

RXDSA The Receive DMA Slot Assignment field specifies which slots (audio channels) are supported by DMA. If the RXDSA bit is set for an assigned slot n (RXSAn = 1), the data received within this slot will not be transferred into the receive FIFO, but will instead be written into the corresponding Receive DMA data register (ARDRn). A DMA request n is asserted, when the ARDRn is full and if the RMA bit n is set. If the RXSD bit for a slot is clear, the RXDSA bit is ignored. The following table shows the DMA slot assignment scheme.

RXDSA Bit	Slots Enabled for DMA
RXDSA0	0
RXDSA1	1
RXDSA2	2
RXDSA3	3

RXFWL The Receive FIFO Warning Level field specifies when a receive interrupt is asserted. A receive interrupt is asserted, when the number of bytes/words in the receive FIFO is greater than the warning level value. An RXFWL value of 0 means that a receive interrupt is asserted if one or more bytes/words are in the RX FIFO. After reset, the RXFWL bit is clear.

Obsolete

17.7.8 Audio Transmit Status and Control Register (ATSCR)

The ASCR register controls the basic operation of the interface. It also holds bits which report the current status of the audio communication. The CPU bus master has read/write access to the ASCR register. At reset, this register is loaded with F003h.

7 – 4	3	2	1	0
TXSA	TXU	TXF	TXE	TXAE

15 – 12	11 – 8
TXFWL	TXDSA

TXAE — The Transmit FIFO Almost Empty bit is set when the number of data bytes/words in transmit buffer is equal to the specified warning limit.
0 – Transmit FIFO above warning limit.
1 – Transmit FIFO at or below warning limit.

TXE — The Transmit FIFO Empty bit is set when the transmit buffer is empty. The TXE bit is set to one every time the TRP is equal to the TWP and the last access to the FIFO was read operation (into ATSR).
0 – Transmit FIFO not empty.
1 – Transmit FIFO empty.

TXF — The Transmit FIFO Full bit is set when the TWP is equal to the TRP and the last access to the FIFO was write operation (write to ATDR).
0 – Transmit FIFO not full.
1 – Transmit FIFO full.

TXU — The Transmit Underflow bit indicates that the transmit shift register (ATSR) has underrun. This occurs when the transmit FIFO was already empty and a complete data word has been transferred. In this case, the TRP will be decremented by 1 and the previous data will be retransmitted. No transmit interrupt and no DMA request will be generated (even if enabled).
0 – Transmit underrun occurred.
1 – Transmit underrun did not occur.

TXSA — The Transmit Slot Assignment field specifies during which slots the transmitter is active and drives data through the STD pin. The STD pin is in high impedance state during all other slots. If the frame consists of less than 4 slots, the TXSA bits for unused slots are ignored. For example, if a frame only consists of 2 slots, TXSA bits 2 and 3 are ignored. The following table shows the slot assignment scheme.

TXSA Bit	Slots Enabled
TXSA0	0
TXSA1	1
TXSA2	2
TXSA3	3

After reset, the TXSA field is clear, so software must load the correct slot assignment.

TXDSA — The Transmit DMA Slot Assignment field specifies which slots (audio channels) are supported by DMA. If the TXDSA bit is set for an assigned slot n (TXSAn = 1), the data to be transmitted within this slot will not be read from the transmit FIFO, but will instead be read from the corresponding Transmit DMA data register (ATDRn). A DMA request n is asserted when the ATDRn is empty. If the TSA bit for a slot is clear, the TXDSA bit is ignored. The following table shows the DMA slot assignment scheme.

TXDSA Bit	Slots Enabled for DMA
TXDSA0	0
TXDSA1	1
TXDSA2	2
TXDSA3	3

TFWL — The Transmit FIFO Warning Level field specifies when a transmit interrupt is asserted. A transmit interrupt is asserted when the number of bytes or words in the transmit FIFO is equal or less than the warning level value. A TXFWL value of Fh means that a transmit interrupt is asserted if one or more bytes or words are available in the transmit FIFO. At reset, the TXFWL field is loaded with Fh.

Obsolete

17.7.9 Audio Clock Control Register (ACCR)

The ACCR register is used to control the bit timing of the audio interface. After reset, this register is clear.

7 … 1	0
FCPRS	CSS

15 … 8
BCPRS

CSS — The Clock Source Select bit selects one out of two possible clock sources for the audio interface. After reset, the CSS bit is clear.
0 – The Aux1 clock is used to clock the Audio Interface.
1 – The 48-MHz USB clock is used to clock the Audio Interface.

FCPRS — The Frame Clock Prescaler is used to divide the bit clock to generate the frame clock for the receive and transmit operations. The bit clock is divided by (FCPRS + 1). After reset, the FCPRS field is clear. The maximum allowed bit clock rate to achieve an 8 kHz frame clock is 1024 kHz. This value must be set correctly even if the frame sync is generated externally.

BCPRS — The Bit Clock Prescaler is used to divide the audio interface clock (selected by the CSS bit) to generate the bit clock for the receive and transmit operations. The audio interface input clock is divided by (BCPRS + 1). After reset, the BCPRS[7:0] bits are clear.

17.7.10 Audio DMA Control Register (ADMACR)

The ADMACR register is used to control the DMA support of the audio interface. In addition, it is used to configure the automatic transmission of the audio control bits. After reset, this register is clear.

7 … 4	3 … 0
TMD	RMD

15 … 13	12 … 11	10 … 8
Reserved	ACO	ACD

RMD — The Receive Master DMA field specify which slots (audio channels) are supported by DMA, i.e. when a DMA request is asserted to the DMA controller. If the RMDn bit is set for an assigned slot n (RXDSAn = 1), a DMA request n is asserted, when the ARDRn is full. If the RXDSAn bit for a slot is clear, the RMDn bit is ignored. The following table shows the receive DMA request scheme.

RMD	DMA Request Condition
0000	None
0001	ARDR0 full
0010	ARDR1 full
0011	ARDR0 full or ARDR1 full
x1xx	Not supported on CP3BT10
1xxx	

TMD — The Transmit Master DMA field specifies which slots (audio channels) are supported by DMA, i.e. when a DMA request is asserted to the DMA controller. If the TMD bit is set for an assigned slot n (TXDSAn = 1), a DMA request n is asserted, when the ATDRn register is empty. If the TXDSA bit for a slot is clear, the TMD bit is ignored. The following table shows the transmit DMA request scheme.

TMD	DMA Request Condition
0000	None
0001	ATDR0 empty
0010	ATDR1 empty
0011	ATDR0 empty or ATDR1 empty
x1xx	Not supported on CP3BT10
1xxx	

ACD — The Audio Control Data field is used to fill the remaining bits of a 16-bit slot if only 13, 14, or 15 bits of PCM audio data are transmitted.

ACO — The Audio Control Output field controls the number of control bits appended to the PCM data word.
00 – No Audio Control bits are appended.
01 – Append ACD0.
10 – Append ACD1:0.
11 – Append ACD2:0.

17.8 USAGE HINTS

When the Advanced Audio Interface is active, it can lock up if the receive FIFO is cleared by writing 1 to the AGCR.CRF bit, the transmit FIFO is cleared by writing 1 to the AGCR.CTF bit, or the module is disabled by clearing the AGCR.AAIEN bit.

Follow this procedure to disable the Advanced Audio Interface:

1. Clear the ARSCR.RXSA and ATSCR.TXSA fields.
2. Wait at least 10 receive/transmit clock cycles.
3. Clear the AGCR.AAIEN bit.

Obsolete

18.0 CVSD/PCM Conversion Module

The CVSD/PCM module performs conversion between CVSD data and PCM data, in which the CVSD encoding is as defined in the Bluetooth specification and the PCM encoding may be 8-bit µ-Law, 8-bit A-Law, or 13-bit to 16-bit Linear.

The CVSD conversion module operates at a fixed rate of 125 µs (8 kHz) per PCM sample. On the CVSD side, there is a read and a write FIFO allowing up to 8 words of data to be read or written at the same time. On the PCM side, there is a double-buffered register requiring data to be read and written every 125 µs. The intended use is to move CVSD data into the module with a CVSD interrupt handler, and to move PCM data with DMA. Figure 40 shows a block diagram of the CVSD to PCM module.

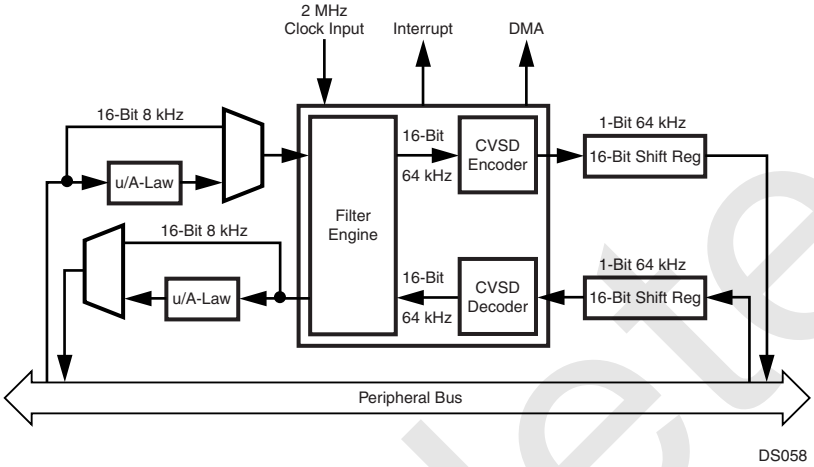

Figure 40. CVSD/PCM Converter Block Diagram

18.1 OPERATION

The Aux2 clock (generated by the Clock module described in Section 11.8) must be configured, because it drives the CVSD module. Software must set its prescaler to provide a 2 MHz input clock based upon the System Clock (usually 12 MHz). This is done by writing an appropriate divisor to the ACDIV2 field of the PRSAC register. Software must also enable the Aux2 clock by setting the ACE2 bit within the CRCTRL register. For example:

```
PRSAC &= 0x0f;
// Set Aux2 prescaler to generate
// 2 MHz (Fsys = 12 MHz)
PRSAC |= 0x50;
CRCTRL |= ACE2; // Enable Aux2 clk
```

The module converts between PCM data and CVSD data at a fixed rate of 8 kHz per PCM sample. Due to compression, the data rate on the CVSD side is only 4 kHz per CVSD sample.

If PCM interrupts are enabled (PCMINT is set) every 125 µs (8 kHz) an interrupt will occur and the interrupt handler can operate on some or all of the four audio streams CVSD in, CVSD out, PCM in, and PCM out. Alternatively, a DMA request is issued every 125 µs and the DMA controller is used to move the PCM data between the CVSD/PCM module and the audio interface.

If CVSD interrupts are enabled, an interrupt is issued when either one of the CVSD FIFOs is almost empty or almost full. On the PCM data side there is double buffering, and on the CVSD side there is an eight word (8 × 16-bit) FIFO for the read and write paths.

Inside the module, a filter engine receives the 8 kHz stream of 16-bit samples and interpolates to generate a 64 kHz stream of 16-bit samples. This goes into a CVSD encoder which converts the data into a single-bit delta stream using the CVSD parameters as defined by the Bluetooth specification. There is a similar path that reverses this process converting the CVSD 64 kHz bit stream into a 64 kHz 16-bit data stream. The filter engine then decimates this stream into an 8 kHz, 16-bit data stream.

18.2 PCM CONVERSIONS

During conversion between CVSD and PCM, any PCM format changes are done automatically depending on whether the PCM data is µ-Law, A-Law, or Linear. In addition to this, a separate function can be used to convert between the various PCM formats as required. Conversion is performed by setting up the control bit CVCTL1.PCMCONV to define the conversion and then writing to the LOGIN and LINEARIN registers and reading from the LOGOUT and LINEAROUT registers. There is no delay in the conversion operation and it does not have to operate at a fixed rate. It will only convert between µ-Law/A-Law and linear, not directly between µ-Law and A-Law. (This could easily be achieved by converting between µ-Law and linear and between linear and A-Law.)

If a conversion is performed between linear and µ-Law log PCM data, the linear PCM data are treated in the left-aligned 14-bit linear data format with the two LSBs unused. If a conversion is performed between linear and A-Law log PCM data, the linear PCM data are treated in the left-aligned 13-bit linear data format with the three LSBs unused.

Obsolete

If the module is only used for PCM conversions, the CVSD clock can be disabled by clearing the CVSD Clock Enable bit (CLKEN) in the control register.

18.3 CVSD CONVERSION

The CVSD/PCM converter module transforms either 8-bit logarithmic or 13- to 16-bit linear PCM samples at a fixed rate of 8 ksps. The CVSD to PCM conversion format must be specified by the CVSDCONV control bits in the CVSD Control register (CVCTRL).

The CVSD algorithm is designed for 2's complement 16-bit data and is tuned for best performance with typical voice data. Mild distortion will occur for peak signals greater than -6 dB. The Bluetooth CVSD standard is designed for best performace with typical voice signals: nominaly -6dB with occasional peaks to 0dB rather than full-scale inputs. Distortion of signals greater than -6dB is not considered detrimental to subjective quality tests for voice-band applications and allows for greater clarity for signals below -6dB. The gain of the input device should be tuned with this in mind.

If required, the RESOLUTION field of the CVCTRL register can be used to optimize the level of the 16-bit linear input data by providing attenuations (right-shifts with sign extention) of 1, 2, or 3 bits.

Log data is always 8 bit, but to perform the CVSD conversion, the log data is first converted to 16-bit 2's complement linear data. A-law and u-law conversion can also slightly affect the optimum gain of the input data. The CVCTRL.RESOLUTION field can be used to attenuate the data if required.

If the resolution is not set properly, the audio signal may be clipped or have reduced attenuation.

18.4 PCM TO CVSD CONVERSION

The converter core reads out the double-buffered PCMIN register every 125 µs and writes a new 16-bit CVSD data stream into the CVSD Out FIFO every 250 µs. If the PCMIN buffer has not been updated with a new PCM sample between two reads from the CVSD core, the old PCM data is used again to maintain a fixed conversion rate. Once a new 16-bit CVSD data stream has been calculated, it is copied into the 8 × 16-bit wide CVSD Out FIFO.

If there are only three empty words (16-bit) left in the FIFO, the nearly full bit (CVNF) is set, and, if enabled (CVSDINT = 1), an interrupt request is asserted.

If the CVSD Out FIFO is full, the full bit (CVF) is set, and, if enabled (CVSDERRINT = 1), an interrupt request is asserted. In this case, the CVSD Out FIFO remains unchanged.

Within the interrupt handler, the CPU can read out the new CVSD data. If the CPU reads from an already empty CVSD Out FIFO, a lockup of the FIFO logic may occur which persists until the next reset. Software *must* check the CVOUTST field of the CVSTAT register to read the number of valid words in the FIFO. Software *must not* use the CVNF bit as an indication of the number of valid words in the FIFO.

18.5 CVSD TO PCM CONVERSION

The converter core reads from the CVSD In FIFO every 250 µs and writes a new PCM sample into the PCMOUT buffer every 125 µs. If the previous PCM data has not yet been transferred to the audio interface, it will be overwritten with the new PCM sample.

If there are only three unread words left, the CVSD In Nearly Empty bit (CVNE) is set and, if enabled (CVSDINT = 1), an interrupt request is generated.

If the CVSD In FIFO is empty, the CVSD In Empty bit (CVE) is set and, if enabled (CVSDERRINT = 1), an interrupt request is generated. If the converter core reads from an already empty CVSD In FIFO, the FIFO automatically returns a checkerboard pattern to guarantee a minimum level of distortion of the audio stream.

18.6 INTERRUPT GENERATION

An interrupt is generated in any of the following cases:

- When a new PCM sample has been written into the PCMOUT register and the CVCTRL.PCMINT bit is set.
- When a new PCM sample has been read from the PCMIN register and the CVCTRL.PCMINT bit is set.
- When the CVSD In FIFO is nearly empty (CVSTAT.CVNE = 1) and the CVCTRL.CVSDINT bit is set.
- When the CVSD Out FIFO is nearly full (CVSTAT.CVNF = 1) and the CVCTRL.CVSDINT bit is set.
- When the CVSD In FIFO is empty (CVSTAT.CVE = 1) and the CVCTRL.CVSDERRINT bit is set.
- When the CVSD Out FIFO is full (CVSTAT.CVF = 1) and the CVCTRL.CVSDERRINT bit is set.

Both the CVSD In and CVSD Out FIFOs have a size of 8 × 16 bit (8 words). The warning limits for the two FIFOs is set at 5 words. (The CVSD In FIFO interrupt will occur when there are 3 words left in the FIFO, and the CVSD Out FIFO interrupt will occur when there are 3 or less empty words left in the FIFO.) The limit is set to 5 words because Bluetooth audio data is transferred in packages composed of 10 or multiples of 10 bytes.

18.7 DMA SUPPORT

The CVSD module can operate with any of four DMA channels. Four DMA channels are required for processor independent operation. Both receive and transmit for CVSD data and PCM data can be enabled individually. The CVSD/PCM module asserts a DMA request to the on-chip DMA controller under the following conditions:

- The DMAPO bit is set and the PCMOUT register is full, because it has been updated by the converter core with a new PCM sample. (The DMA controller can read out one PCM data word from the PCMOUT register.)
- The DMAPI bit is set and the PCMIN register is empty, because it has been read by the converter core. (The DMA controller can write one new PCM data word into the PCMIN register.)
- The DMACO bit is set and a new 16-bit CVSD data stream has been copied into the CVSD Out FIFO. (The DMA controller can read out one 16-bit CVSD data word from the CVSD Out FIFO.)
- The DMACI bit is set and a 16-bit CVSD data stream has been read from the CVSD In FIFO. (The DMA controller can write one new 16-bit CVSD data word into the CVSD In FIFO.)

Obsolete

The CVSD/PCM module only supports indirect DMA transfers. Therefore, transferring PCM data between the CVSD/PCM module and another on-chip module requires two bus cycles.

The trigger for DMA may also trigger an interrupt if the corresponding enable bits in the CVCTRL register is set. Therefore care must be taken when setting the desired interrupt and DMA enable bits. The following conditions must be avoided:

- Setting the PCMINT bit and either of the DMAPO or DMAPI bits.
- Setting the CVSDINT bit and either of the DMACO or DMACI bits.

18.8 FREEZE

The CVSD/PCM module provides support for an In-System-Emulator by means of a special FREEZE input. While FREEZE is asserted the module will exhibit the following behavior:

- CVSD In FIFO will not have data removed by the converter core.
- CVSD Out FIFO will not have data added by the converter core.
- PCM Out buffer will not be updated by the converter core.
- The Clear-on-Read function of the following status bits in the CVSTAT register is disabled:
  - PCMINT
  - CVE
  - CVF

18.9 CVSD/PCM CONVERTER REGISTERS

Table 43 lists the CVSD/PCM registers.

Table 43 CVSD/PCM Registers

Name	Address	Description
CVSDIN	FF FC20h	CVSD Data Input Register
CVSDOUT	FF FC22h	CVSD Data Output Register
PCMIN	FF FC24h	PCM Data Input Register
PCMOUT	FF FC26h	PCM Data Output Register
LOGIN	FF FC28h	Logarithmic PCM Data Input Register
LOGOUT	FF FC2Ah	Logarithmic PCM Data Output Register
LINEARIN	FF FC2Ch	Linear PCM Data Input Register

Table 43 CVSD/PCM Registers

Name	Address	Description
LINEAROUT	FF FC2Eh	Linear PCM Data Output Register
CVCTRL	FF FC30h	CVSD Control Register
CVSTAT	FF FC32h	CVSD Status Register

18.9.1 CVSD Data Input Register (CVSDIN)

The CVSDIN register is a 16-bit wide, write-only register. It is used to write CVSD data into the CVSD to PCM converter FIFO. The FIFO is 8 words deep. The CVSDIN bit 15 represents the CVSD data bit at $t = t_0$, CVSDIN bit 0 represents the CVSD data bit at $t = t_0$ - 250 ms.

15	0
CVSDIN	

18.9.2 CVSD Data Output Register (CVSDOUT)

The CVSDOUT register is a 16-bit wide read-only register. It is used to read the CVSD data from the PCM to CVSD converter. The FIFO is 8 words deep. Reading the CVSDOUT register after reset returns undefined data.

15	0
CVSDOUT	

18.9.3 PCM Data Input Register (PCMIN)

The PCMIN register is a 16-bit wide write-only register. It is used to write PCM data to the PCM to CVSD converter via the peripheral bus. It is double-buffered, providing a 125 µs period for an interrupt or DMA request to respond.

15	0
PCMIN	

18.9.4 PCM Data Output Register (PCMOUT)

The PCMOUT register is a 16-bit wide read-only register. It is used to read PCM data from the CVSD to PCM converter. It is double-buffered, providing a 125 µs period for an interrupt or DMA request to respond. After reset the PCMOUT register is clear.

15	0
PCMOUT	

Obsolete

18.9.5 Logarithmic PCM Data Input Register (LOGIN)

The LOGIN register is an 8-bit wide write-only register. It is used to receive 8-bit logarithmic PCM data from the peripheral bus and convert it into 13-bit linear PCM data.

7							0
LOGIN							

18.9.6 Logarithmic PCM Data Output Register (LOGOUT)

The LOGOUT register is an 8-bit wide read-only register. It holds logarithmic PCM data that has been converted from linear PCM data. After reset, the LOGOUT register is clear.

7							0
LOGOUT							

18.9.7 Linear PCM Data Input Register (LINEARIN)

The LINEARIN register is a 16-bit wide write-only register. The data is left-aligned. When converting to A-law, bits 2:0 are ignored. When converting to µ-law, bits 1:0 are ignored.

15															0
LINEARIN															

18.9.8 Linear PCM Data Output Register (LINEAROUT)

The LINEAROUT register is a 16-bit wide read-only register. The data is left-aligned. When converting from A-law, bits 2:0 are clear. When converting from µ-law, bits 1:0 are clear. After reset, this register is clear.

15															0
LINEAROUT															

18.9.9 CVSD Control Register (CVCTRL)

The CVCTRL register is a 16-bit wide, read/write register that controls the mode of operation and of the module's interrupts. At reset, all implemented bits are cleared.

7	6	5	4	3	2	1	0
DMA PO	DMA CI	DMA CO	CVSD ERR-INT	CVSD INT	PCM INT	CLK EN	CVEN

15 14	13	12	11	10	9	8
Res.	RESOLUTION		PCMCONV	CVSDCONV		DMAPI

CVEN — The Module Enable bit enables or disables the CVSD conversion module interface. When the bit is set, the interface is enabled which allows read and write operations to the rest of the module. When the bit is clear, the module is disabled. When the module is disabled the status register CVSTAT will be cleared to its reset state.
0 – CVSD module enabled.
1 – CVSD module disabled.

CLKEN — The CVSD Clock Enable bit enables the 2-MHz clock to the filter engine and CVSD encoders and decoders.
0 – CVSD module clock disabled.
1 – CVSD module clock enabled.

PCMINT — The PCM Interrupt Enable bit controls generation of the PCM interrupt. If set, this bit enables the PCM interrupt. If the PCMINT bit is clear, the PCM interrupt is disabled. After reset, this bit is clear.
0 – PCM interrupt disabled.
1 – PCM interrupt enabled.

CVSDINT — The CVSD FIFO Interrupt Enable bit controls generation of the CVSD interrupt. If set, this bit enables the CVSD interrupt that occurs if the CVSD In FIFO is nearly empty or the CVSD Out FIFO is nearly full. If the CVSDINT bit is clear, the CVSD nearly full/nearly empty interrupt is disabled. After reset, this bit is clear.
0 – CVSD interrupt disabled.
1 – CVSD interrupt enabled.

CVSDERRINT — The CVSD FIFO Error Interrupt Enable bit controls generation of the CVSD error interrupt. If set, this bit enables an interrupt to occur when the CVSD Out FIFO is full or the CVSD In FIFO is empty. If the CVSDERRORINT bit is clear, the CVSD full/empty interrupt is disabled. After reset, this bit is clear.
0 – CVSD error interrupt disabled.
1 – CVSD error interrupt enabled.

DMACO — The DMA Enable for CVSD Out bit enables hardware DMA control for reading CVSD data from the CVSD Out FIFO. If clear, DMA support is disabled. After reset, this bit is clear.
0 – CVSD output DMA disabled.
1 – CVSD output DMA enabled.

DMACI — The DMA Enable for CVSD In bit enables hardware DMA control for writing CVSD data into the CVSD In FIFO. If clear, DMA support is disabled. After reset, this bit is clear.
0 – CVSD input DMA disabled.
1 – CVSD input DMA enabled.

DMAPO — The DMA Enable for PCM Out bit enables hardware DMA control for reading PCM data from the PCMOUT register. If clear, DMA support is disabled. After reset, this bit is clear.
0 – PCM output DMA disabled.
1 – PCM output DMA enabled.

Obsolete

DMAPI The DMA Enable for PCM In bit enables hardware DMA control for writing PCM data into the PCMIN register. If cleared, DMA support is disabled. After reset, this bit is clear.
0 – PCM input DMA disabled.
1 – PCM input DMA enabled.

CVSDCONV The CVSD to PCM Conversion Format field specifies the PCM format for CVSD/PCM conversions. After reset, this field is clear.
00 – CVSD <-> 8-bit µ-Law PCM.
01 – CVSD <-> 8-bit A-Law PCM.
10 – CVSD <-> Linear PCM.
11 – Reserved.

PCMCONV The PCM to PCM Conversion Format bit selects the PCM format for PCM/PCM conversions.
0 – Linear PCM <-> 8-bit µ-Law PCM
1 – Linear PCM <-> 8-bit A-Law PCM

RESOLUTION The Linear PCM Resolution field specifies the attenuation of the PCM data for the linear PCM to CVSD conversions by right shifting and sign extending the data. This affects the log PCM data as well as the linear PCM data. The log data is converted to either left-justified zero-stuffed 13-bit (A-law) or 14-bit (u-law). The RESOLUTION field can be used to compensate for any change in average levels resulting from this conversion. After reset, these two bits are clear.
00 – No shift.
01 – 1-bit attentuation.
10 – 2-bit attentuation.
11 – 3-bit attentuation.

18.9.10 CVSD Status Register (CVSTAT)

The CVSTAT register is a 16-bit wide, read-only register that holds the status information of the CVSD/PCM module. At reset, and if the CVCTL1.CVEN bit is clear, all implemented bits are cleared.

7 – 5	4	3	2	1	0
CVINST	CVF	CVE	PCMINT	CVNF	CVNE

15 – 11	10 – 8
Reserved	CVOUTST

CVNE The CVSD In FIFO Nearly Empty bit indicates when only three CVSD data words are left in the CVSD In FIFO, so new CVSD data should be written into the CVSD In FIFO. If the CVSDINT bit is set, an interrupt will be asserted when the CVNE bit is set. If the DMACI bit is set, a DMA request will be asserted when this bit is set. The CVNE bit is cleared when the CVSTAT register is read.
0 – CVSD In FIFO is not nearly empty.
1 – CVSD In FIFO is nearly empty.

CVNF The CVSD Out FIFO Nearly Full bit indicates when only three empty word locations are left in the CVSD Out FIFO, so the CVSD Out FIFO should be read. If the CVSDINT bit is set, an interrupt will be asserted when the CVNF bit is set. If the DMACO bit is set, a DMA request will be asserted when this bit is set. Software *must not* rely on the CVNF bit as an indicator of the number of valid words in the FIFO. Software *must* check the CVOUTST field to read the number of valid words in the FIFO. The CVNF bit is cleared when the CVSTAT register is read.
0 – CVSD Out FIFO is not nearly full.
1 – CVSD Out FIFO is nearly full.

PCMINT The PCM Interrupt bit set indicates that the PCMOUT register is full and needs to be read or the PCMIN register is empty and needs to be loaded with new PCM data. The PCMINT bit is cleared when the CVSTAT register is read, unless the device is in FREEZE mode.
0 – PCM does not require service.
1 – PCM requires loading or unloading.

CVE The CVSD In FIFO Empty bit indicates when the CVSD In FIFO has been read by the CVSD converter while the FIFO was already empty. If the CVSDERRORINT bit is set, an interrupt will be asserted when the CVE bit is set. The CVE bit is cleared when the CVSTAT register is read, unless the device is in FREEZE mode.
0 – CVSD In FIFO has not been read while empty.
1 – CVSD In FIFO has been read while empty.

CVF The CVSD Out FIFO Full bit set indicates whether the CVSD Out FIFO has been written by the CVSD converter while the FIFO was already full. If the CVSDERRORINT bit is set, an interrupt will be asserted when the CVF bit is set. The CVF bit is cleared when the CVSTAT register is read, unless the device is in FREEZE mode.
0 – CVSD Out FIFO has not been written while full.
1 – CVSD Out FIFO has been written while full.

CVINST The CVSD In FIFO Status field reports the current number of empty 16-bit word locations in the CVSD In FIFO. When the FIFO is empty, the CVINST field will read as 111b. When the FIFO holds 7 or 8 words of data, the CVINST field will read as 000b.

CVOUTST CVSD Out FIFO Status field reports the current number of valid 16-bit CVSD data words in the CVSD Out FIFO. When the FIFO is empty, the CVOUTST field will read as 000b. When the FIFO holds 7 or 8 words of data, the CVOUTST field will read as 111b.

Obsolete

19.0 UART Module

The UART module is a full-duplex Universal Asynchronous Receiver/Transmitter that supports a wide range of software-programmable baud rates and data formats. It handles automatic parity generation and several error detection schemes.

The UART module offers the following features:

- Full-duplex double-buffered receiver/transmitter
- Programmable baud rate
- Programmable framing formats: 7, 8, or 9 data bits; even, odd, or no parity; one or two stop bits (mark or space)
- Hardware parity generation for data transmission and parity check for data reception
- Interrupts on “transmit ready” and “receive ready” conditions, separately enabled
- Software-controlled break transmission and detection
- Internal diagnostic capability
- Automatic detection of parity, framing, and overrun errors
- Hardware flow control ($\overline{CTS}$ and $\overline{RTS}$ signals)
- DMA capability

19.1 FUNCTIONAL OVERVIEW

Figure 41 is a block diagram of the UART module showing the basic functional units in the UART:

- Transmitter
- Receiver
- Baud Rate Generator
- Control and Error Detection

The Transmitter block consists of an 8-bit transmit shift register and an 8-bit transmit buffer. Data bytes are loaded in parallel from the buffer into the shift register and then shifted out serially on the TXD pin.

The Receiver block consists of an 8-bit receive shift register and an 8-bit receive buffer. Data is received serially on the RXD pin and shifted into the shift register. Once eight bits have been received, the contents of the shift register are transferred in parallel to the receive buffer.

The Transmitter and Receiver blocks both contain extensions for 9-bit data transfers, as required by the 9-bit and loopback operating modes.

The Baud Rate Generator generates the bit shift clock. It consists of two registers and a two-stage counter. The registers are used to specify a prescaler value and a baud rate divisor. The first stage of the counter divides the UART clock based on the value of the programmed prescaler to create a slower clock. The second stage of the counter creates the baud rate clock by dividing the output of the first stage based on the programmed baud rate divisor.

The Control and Error Detection block contains the UART control registers, control logic, error detection circuit, parity generator/checker, and interrupt generation logic. The control registers and control logic determine the data format, mode of operation, clock source, and type of parity used. The error detection circuit generates parity bits and checks for parity, framing, and overrun errors.

The Flow Control Logic block provides the capability for hardware handshaking between the UART and a peripheral device. When the peripheral device needs to stop the flow of data from the UART, it de-asserts the clear-to-send ($\overline{CTS}$) signal which causes the UART to pause after sending the current frame (if any). The UART asserts the ready-to-send ($\overline{RTS}$) signal to the peripheral when it is ready to send a character.

19.2 UART OPERATION

The UART normally operates in asynchronous mode. There are two special-purpose modes, called attention and diagnostic. This section describes the operating modes of the UART.

19.2.1 Asynchronous Mode

The asynchronous mode of the UART enables the device to communicate with other devices using just two communication signals: transmit and receive.

In asynchronous mode, the transmit shift register (TSFT) and the transmit buffer (UTBUF) double-buffer the data for transmission. To transmit a character, a data byte is loaded in the UTBUF register. The data is then transferred to the TSFT register. While the TSFT register is shifting out the current character (LSB first) on the TXD pin, the UTBUF register is loaded by software with the next byte to be transmitted. When TSFT finishes transmission of the last stop bit of the current frame, the contents of UTBUF are transferred to the TSFT register and the Transmit Buffer Empty bit (UTBE) is set. The UTBE bit is automatically cleared by the UART when software loads a new character into the UTBUF register. During transmission, the UXMIP bit is set high by the UART. This bit is reset only after the UART has sent the last stop bit of the current character and the UTBUF register is empty. The UTBUF register is a read/write register. The TSFT register is not software accessible.

In asynchronous mode, the input frequency to the UART is 16 times the baud rate. In other words, there are 16 clock cycles per bit time. In asynchronous mode, the baud rate generator is always the UART clock source.

The receive shift register (RSFT) and the receive buffer (URBUF) double buffer the data being received. The UART receiver continuously monitors the signal on the RXD pin for a low level to detect the beginning of a start bit. On sensing this low level, the UART waits for seven input clock cycles and samples again three times. If all three samples still indicate a valid low, then the receiver considers this to be a valid start bit, and the remaining bits in the character frame are each sampled three times, around the mid-bit position. For any bit following the start bit, the logic value is found by majority voting, i.e. the two samples with the same value define the value of the data bit. Figure 42 illustrates the process of start bit detection and bit sampling.

Data bits are sensed by taking a majority vote of three samples latched near the midpoint of each baud (bit time). Normally, the position of the samples within the baud is determined automatically, but software can override the automatic selection by setting the USMD bit in the UMDSL2 register and programming the USPOS register.

Serial data input on the RXD pin is shifted into the RSFT register. On receiving the complete character, the contents

of the RSFT register are copied into the URBUF register and the Receive Buffer Full bit (URBF) is set. The URBF bit is automatically reset when software reads the character from the URBUF register. The RSFT register is not software accessible.

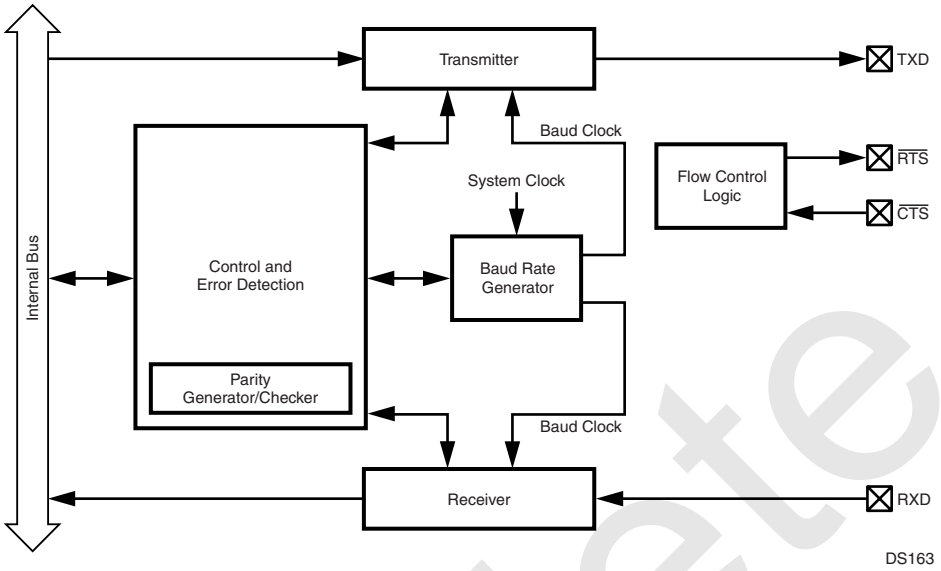

Figure 41. UART Block Diagram

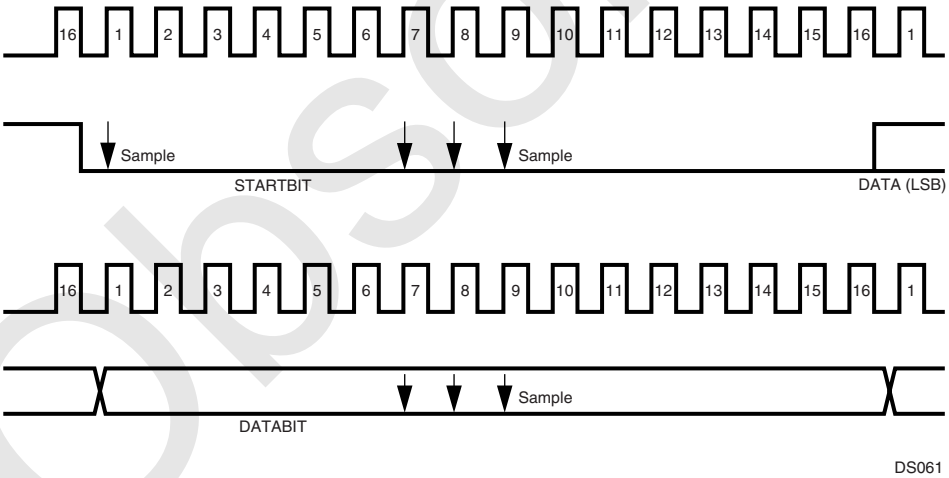

Figure 42. UART Asynchronous Communication

19.2.2 Attention Mode

The Attention mode is available for networking this device with other processors. This mode requires the 9-bit data format with no parity. The number of start bits and number of stop bits are programmable. In this mode, two types of 9-bit characters are sent on the network: address characters consisting of 8 address bits and a 1 in the ninth bit position and data characters consisting of 8 data bits and a 0 in the ninth bit position.

While in Attention mode, the UART receiver monitors the communication flow but ignores all characters until an address character is received. On receiving an address character, the contents of the receive shift register are copied to the receive buffer. The URBF bit is set and an interrupt (if enabled) is generated. The UATN bit is automatically cleared, and the UART begins receiving all subsequent characters. Software must examine the contents of the URBUF register and respond by accepting the subsequent characters (by leaving the UATN bit reset) or waiting for the next address character (by setting the UATN bit again).

The operation of the UART transmitter is not affected by the selection of this mode. The value of the ninth bit to be transmitted is programmed by setting or clearing the UXB9 bit in

Obsolete

the UART Frame Select register. The value of the ninth bit received is read from URB9 in the UART Status Register.

19.2.3 Diagnostic Mode

The Diagnostic mode is available for testing of the UART. In this mode, the TXD and RXD pins are internally connected together, and data shifted out of the transmit shift register is immediately transferred to the receive shift register. This mode supports only the 9-bit data format with no parity. The number of start and stop bits is programmable.

19.2.4 Frame Format Selection

The format shown in Figure 43 consists of a start bit, seven data bits (excluding parity), and one or two stop bits. If parity bit generation is enabled by setting the UPEN bit, a parity bit is generated and transmitted following the seven data bits.

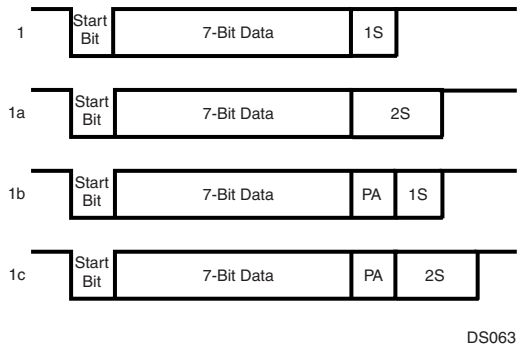

Figure 43. 7-Bit Data Frame Options

The format shown in Figure 44 consists of one start bit, eight data bits (excluding parity), and one or two stop bits. If parity bit generation is enabled by setting the UPEN bit, a parity bit is generated and transmitted following the eight data bits.

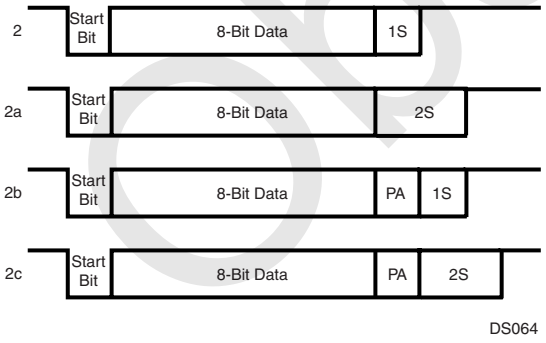

Figure 44. 8-Bit Data Frame Options

The format shown in Figure 45 consists of one start bit, nine data bits, and one or two stop bits. This format also supports the UART attention feature. When operating in this format, all eight bits of UTBUF and URBUF are used for data. The ninth data bit is transmitted and received using two bits in the control registers, called UXB9 and URB9. Parity is not generated or verified in this mode.

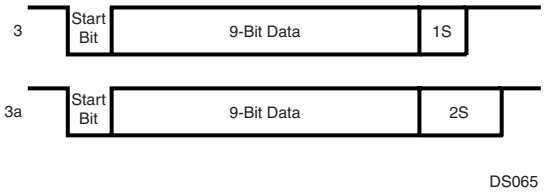

Figure 45. 9-bit Data Frame Options

19.2.5 Baud Rate Generator

The Baud Rate Generator creates the basic baud clock from the System Clock. The System Clock is passed through a two-stage divider chain consisting of a 5-bit baud rate prescaler (UPSC) and an 11-bit baud rate divisor (UDIV).

The relationship between the 5-bit prescaler select (UPSC) setting and the prescaler factors is shown in Table 44.

Table 44 Prescaler Factors

Prescaler Select	Prescaler Factor
00000	No clock
00001	1
00010	1.5
00011	2
00100	2.5
00101	3
00110	3.5
00111	4
01000	4.5
01001	5
01010	5.5
01011	6
01100	6.5
01101	7
01110	7.5
01111	8
10000	8.5
10001	9
10010	9.5
10011	10
10100	10.5
10101	11
10110	11.5
10111	12
11000	12.5
11001	13

Obsolete

Table 44 Prescaler Factors (Continued)

Prescaler Select	Prescaler Factor
11010	13.5
11011	14
11100	14.5
11101	15
11110	15.5
11111	16

A prescaler factor of zero corresponds to "no clock." The "no clock" condition is the UART power down mode, in which the UART clock is turned off to reduce power consumption. Software must select the "no clock" condition before entering a new baud rate. Otherwise, it could cause incorrect data to be received or transmitted.

In asynchronous mode, the baud rate is calculated by:

$$BR = \frac{SYS_CLK}{(O \times N \times P)}$$

where BR is the baud rate, SYS_CLK is the System Clock frequency, O is the oversample rate, N is the value of the baud rate divisor + 1, and P is the prescaler divide factor selected by the value in the UPSR register.

19.2.6 Interrupts

The UART is capable of generating interrupts on:

- Receive Buffer Full
- Receive Error
- Transmit Buffer Empty

Figure 46 shows a diagram of the interrupt sources and associated enable bits.

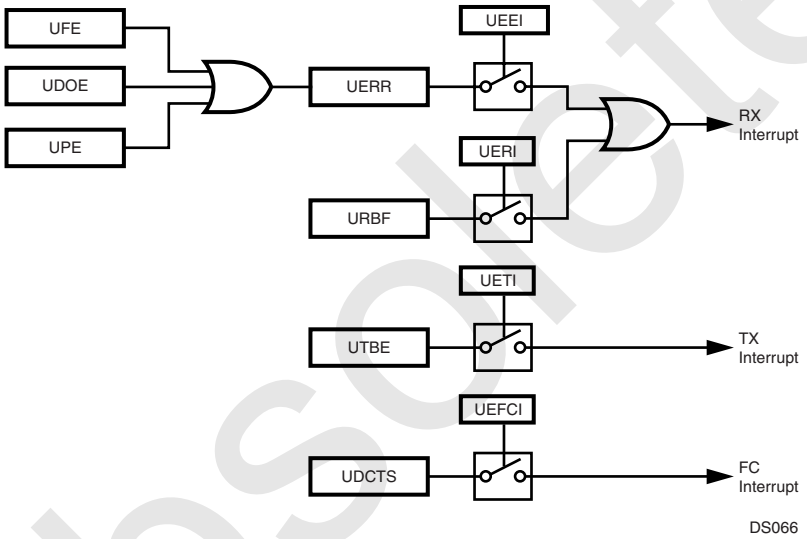

Figure 46. UART Interrupts

The interrupts can be individually enabled or disabled using the Enable Transmit Interrupt (UETI), Enable Receive Interrupt (UERI), and Enable Receive Error Interrupt (UEER) bits in the UICTRL register.

A transmit interrupt is generated when both the UTBE and UETI bits are set. To remove this interrupt, software must either disable the interrupt by clearing the UETI bit or write to the UTBUF register (which clears the UTBE bit).

A receive interrupt is generated on these conditions:

- Both the URBF and UERI bits are set. To remove this interrupt, software must either disable the interrupt by clearing the UERI bit or read from the URBUF register (which clears the URBF bit).
- Both the UERR and the UEEI bits are set. To remove this interrupt, software must either disable the interrupt by clearing the UEEI bit or read the USTAT register (which clears the UERR bit).

A flow control interrupt is generated when both the UDCTS and the UEFCI bits are set. To remove this interrupt, software must either disable the interrupt by clearing the UEFCI bit or read the UICTRL register (which clears the UDCTS bit).

In addition to the dedicated inputs to the ICU for UART interrupts, the UART receive (RXD) and Clear To Send ($\overline{CTS}$) signals are inputs to the MIWU (see Section 13.0), which can be programmed to generate edge-triggered interrupts.

19.2.7 DMA Support

The UART can operate with one or two DMA channels. Two DMA channels must be used for processor-independent full-duplex operation. Both receive and transmit DMA can be enabled simultaneously.

If transmit DMA is enabled (the UETD bit is set), the UART generates a DMA request when the UTBE bit changes state from clear to set. Enabling transmit DMA automatically disables transmit interrupts, without regard to the state of the UETI bit.

If receive DMA is enabled (the UERD bit is set), the UART generates a DMA request when the URBF bit changes state from clear to set. Enabling receive DMA automatically dis-

Obsolete

ables receive interrupts, without regard to the state of the UERI bit. However, receive error interrupts should be enabled (the UEEI bit is set) to allow detection of receive errors when DMA is used.

19.2.8 Break Generation and Detection

A line break is generated when the UBRK bit is set in the UMDSL1 register. The TXD line remains low until the program resets the UBRK bit.

A line break is detected if RXD remains low for 10 bit times or longer after a missing stop bit is detected.

19.2.9 Parity Generation and Detection

Parity is only generated or checked with the 7-bit and 8-bit data formats. It is not generated or checked in the diagnostic loopback mode, the attention mode, or in normal mode with the 9-bit data format. Parity generation and checking are enabled and disabled using the PEN bit in the UFRS register. The UPSEL bits in the UFRS register are used to select odd, even, or no parity.

19.3 UART REGISTERS

Software interacts with the UART by accessing the UART registers. There are eight registers, as listed in Table 45.

Table 45 UART Registers

Name	Address	Description
URBUF	FF FE42h	UART Receive Data Buffer
UTBUF	FF FE40h	UART Transmit Data Buffer
UPSR	FF FE4Eh	UART Baud Rate Prescaler
UBAUD	FF FE4Ch	UART Baud Rate Divisor
UFRS	FF FE48h	UART Frame Select Register
UMDSL1	FF FE4Ah	UART Mode Select Register 1
USTAT	FF FE46h	UART Status Register
UICTRL	FF FE44h	UART Interrupt Control Register
UOVR	FF FE50h	UART Oversample Rate Register
UMDSL2	FF FE52h	UART Mode Select Register 2
USPOS	FF FE54h	UART Sample Position Register

19.3.1 UART Receive Data Buffer (URBUF)

The URBUF register is a byte-wide, read/write register used to receive each data byte.

7	0
URBUF	

19.3.2 UART Transmit Data Buffer (UTBUF)

The UTBUF register is a byte-wide, read/write register used to transmit each data byte.

7	0
UTBUF	

19.3.3 UART Baud Rate Prescaler (UPSR)

The UPSR register is a byte-wide, read/write register that contains the 5-bit clock prescaler and the upper three bits of the baud rate divisor. This register is cleared upon reset. The register format is shown below.

7	3	2	0
UPSC		UDIV10:8	

UPSC The Prescaler field specifies the prescaler value used for dividing the System Clock in the first stage of the two-stage divider chain. For the prescaler factors corresponding to each 5-bit value, see Table 44.

UDIV10:8 The Baud Rate Divisor field holds the three most significant bits (bits 10, 9, and 8) of the UART baud rate divisor used in the second stage of the two-stage divider chain. The remaining bits of the baud rate divisor are held in the UBAUD register.

19.3.4 UART Baud Rate Divisor (UBAUD)

The UBAUD register is a byte-wide, read/write register that contains the lower eight bits of the baud rate divisor. The register contents are unknown at power-up and are left unchanged by a reset operation. The register format is shown below.

7	0
UDIV7:0	

UDIV7:0 The Baud Rate Divisor field holds the eight lowest-order bits of the UART baud rate divisor used in the second stage of the two-stage divider chain. The three most significant bits are held in the UPSR register. The divisor value used is (UDIV[10:0] + 1).

Obsolete

19.3.5 UART Frame Select Register (UFRS)

The UFRS register is a byte-wide, read/write register that controls the frame format, including the number of data bits, number of stop bits, and parity type. This register is cleared upon reset. The register format is shown below.

7	6	5	4	3	2	1	0
Reserved	UPEN	UPSEL		UXB9	USTP	UCHAR	

UCHAR — The Character Frame Format field selects the number of data bits per frame, not including the parity bit, as follows:
00 – 8 data bits per frame.
01 – 7 data bits per frame.
10 – 9 data bits per frame.
11 – Loop-back mode, 9 data bits per frame.

USTP — The Stop Bits bit specifies the number of stop bits transmitted in each frame. If this bit is 0, one stop bit is transmitted. If this bit is 1, two stop bits are transmitted.
0 – One stop bit per frame.
1 – Two stop bits per frame.

UXB9 — The Transmit 9th Data Bit holds the value of the ninth data bit, either 0 or 1, transmitted when the UART is configured to transmit nine data bits per frame. It has no effect when the UART is configured to transmit seven or eight data bits per frame.

UPSEL — The Parity Select field selects the treatment of the parity bit. When the UART is configured to transmit nine data bits per frame, the parity bit is omitted and the UPSEL field is ignored.
00 – Odd parity.
01 – Even parity.
10 – No parity, transmit 1 (mark).
11 – No parity, transmit 0 (space).

UPEN — The Parity Enable bit enables or disables parity generation and parity checking. When the UART is configured to transmit nine data bits per frame, there is no parity bit and the UPEN bit is ignored.
0 – Parity generation and checking disabled.
1 – Parity generation and checking enabled.

19.3.6 UART Mode Select Register 1 (UMDSL1)

The UMDSL1 register is a byte-wide, read/write register that selects the clock source, synchronization mode, attention mode, and line break generation. This register is cleared at reset. When software writes to this register, the reserved bits must be written with 0 for proper operation. The register format is shown below.

7	6	5	4	3	2	1	0
URTS	UFCE	UERD	UETD	Res.	UBRK	UATN	Res.

UATN — The Attention Mode bit is used to enable Attention mode. When set, this bit selects the attention mode of operation for the UART. When clear, the attention mode is disabled. The hardware clears this bit after an address frame is received. An address frame is a 9-bit character with a 1 in the ninth bit position.
0 – Attention mode disabled.
1 – Attention mode enabled.

UBRK — The Force Transmission Break bit is used to force the TXD output low. Setting this bit to 1 causes the TXD pin to go low. TXD remains low until the UBRK bit is cleared by software.
0 – Normal operation.
1 – TXD pin forced low.

UETD — The Enable Transmit DMA bit controls whether DMA is used for UART transmit operations. Enabling transmit DMA automatically disables transmit interrupts, without regard to the state of the UETI bit.
0 – Transmit DMA disabled.
1 – Transmit DMA enabled.

UERD — The Enable Receive DMA bit controls whether DMA is used for UART receive operations. Enabling receive DMA automatically disables receive interrupts, without regard to the state of the UERI bit. Receive error interrupts are unaffected by the UERD bit.
0 – Receive DMA disabled.
1 – Receive DMA enabled.

UFCE — The Flow Control Enable bit controls whether flow control interrupts are enabled.
0 – Flow control interrupts disabled.
1 – Flow control interrupts enabled.

URTS — The Ready To Send bit directly controls the state of the $\overline{RTS}$ output.
0 – $\overline{RTS}$ output is high.
1 – $\overline{RTS}$ output is low.

Obsolete

19.3.7 UART Status Register (USTAT)

The USTAT register is a byte-wide, read-only register that contains the receive and transmit status bits. This register is cleared upon reset. Any attempt by software to write to this register is ignored. The register format is shown below.

7	6	5	4	3	2	1	0
Res.	UXMIP	URB9	UBKD	UERR	UDOE	UFE	UPE

UPE — The Parity Error bit indicates whether a parity error is detected within a received character. This bit is automatically cleared by the hardware when the USTAT register is read.
0 – No parity error occurred.
1 – Parity error occurred.

UFE — The Framing Error bit indicates whether the UART fails to receive a valid stop bit at the end of a frame. This bit is automatically cleared by the hardware when the USTAT register is read.
0 – No framing error occurred.
1 – Framing error occurred.

UDOE — The Data Overrun Error bit is set when a new character is received and transferred to the URBUF register before software has read the previous character from the URBUF register. This bit is automatically cleared by the hardware when the USTAT register is read.
0 – No receive overrun error occurred.
1 – Receive overrun error occurred.

UERR — The Error Status bit indicates when a parity, framing, or overrun error occurs (any time that the UPE, UFE, or UDOE bit is set). It is automatically cleared by the hardware when the UPE, UFE, and UDOE bits are all 0.
0 – No receive error occurred.
1 – Receive error occurred.

UBKD — The Break Detect bit indicates when a line break condition occurs. This condition is detected if RXD remains low for at least ten bit times after a missing stop bit has been detected at the end of a frame. The hardware automatically clears the UBKD bit upon read of the USTAT register, but only if the break condition on RXD no longer exists. If reading the USTAT register does not clear the UBKD bit because the break is still actively driven on the line, the hardware clears the bit as soon as the break condition no longer exists (when the RXD input returns to a high level).
0 – No break condition occurred.
1 – Break condition occurred.

URB9 — The Received 9th Data Bit holds the ninth data bit, when the UART is configured to operate in the 9-bit data format.

UXMIP — The Transmit In Progress bit indicates when the UART is transmitting. The hardware sets this bit when the UART is transmitting data and clears the bit at the end of the last frame bit.
0 – UART is not transmitting.
1 – UART is transmitting.

19.3.8 UART Interrupt Control Register (UICTRL)

The UICTRL register is a byte-wide register that contains the receive and transmit interrupt status bits (read-only bits) and the interrupt enable bits (read/write bits). The register is initialized to 01h at reset. The register format is shown below.

7	6	5	4	3	2	1	0
UEEI	UERI	UETI	UEFCI	UCTS	UDCTS	URBF	UTBE

UTBE — The Transmit Buffer Empty bit is set by hardware when the UART transfers data from the UTBUF register to the transmit shift register for transmission. It is automatically cleared by the hardware on the next write to the UTBUF register.
0 – Transmit buffer is loaded.
1 – Transmit buffer is empty.

URBF — The Receive Buffer Full bit is set by hardware when the UART has received a complete data frame and has transferred the data from the receive shift register to the URBUF register. It is automatically cleared by the hardware when the URBUF register is read.
0 – Receive buffer is empty.
1 – Receive buffer is loaded.

UDCTS — The Delta Clear To Send bit indicates whether the $\overline{CTS}$ input has changed state since the CPU last read this register.
0 – No change since last read.
1 – State has changed since last read.

UCTS — The Clear To Send bit indicates the state on the $\overline{CTS}$ input.
0 – $\overline{CTS}$ input is high.
1 – $\overline{CTS}$ input is low.

UEFCI — The Enable Flow Control Interrupt bit controls whether a flow control interrupt is generated when the UDCTS bit changes from clear to set.
0 – Flow control interrupt disabled.
1 – Flow control interrupt enabled.

UETI — The Enable Transmitter Interrupt bit, when set, enables generation of an interrupt when the hardware sets the UTBE bit.
0 – Transmit buffer empty interrupt disabled.
1 – Transmit buffer empty interrupt enabled.

UERI — The Enable Receiver Interrupt bit, when set, enables generation of an interrupt when the hardware sets the URBF bit.
0 – Receive buffer full interrupt disabled.
1 – Receive buffer full interrupt enabled.

Obsolete

UEEI — The Enable Receive Error Interrupt bit, when set, enables generation of an interrupt when the hardware sets the UERR bit in the USTAT register.
0 – Receive error interrupt disabled.
1 – Receive error interrupt enabled.

19.3.9 UART Oversample Rate Register (UOVR)

The UOVR register is a byte-wide, read/write register that specifies the oversample rate. At reset, the UOVR register is cleared. The register format is shown below.

7 – 4	3 – 0
Reserved	UOVSR

UOVSR — The Oversampling Rate field specifies the oversampling rate, as given in the following table.

UOVSR3:0	Oversampling Rate
0000–0110	16
0111	7
1000	8
1001	9
1010	10
1011	11
1100	12
1101	13
1110	14
1111	15

19.3.10 UART Mode Select Register 2 (UMDSL2)

The UMDSL2 register is a byte-wide, read/write register that controls the sample mode used to recover asynchronous data. At reset, the UOVR register is cleared. The register format is shown below.

7 – 1	0
Reserved	USMD

USMD — The USMD bit controls the sample mode for asynchronous transmission.
0 – UART determines the sample position automatically.
1 – The USPOS register determines the sample position.

19.3.11 UART Sample Position Register (USPOS)

The USPOS register is a byte-wide, read/write register that specifies the sample position when the USMD bit in the UMDSL2 register is set. At reset, the USPOS register is initialized to 06h. The register format is shown below.

7 – 4	3 – 0
Reserved	USAMP

USAMP — The Sample Position field specifies the oversample clock period at which to take the first of three samples for sensing the value of data bits. The clocks are numbered starting at 0 and may range up to 15 for 16× oversampling. The maximum value for this field is (oversampling rate - 3). The table below shows the clock period at which each of the three samples is taken, when automatic sampling is enabled (UMDSL2.USMD = 0).

Oversampling Rate	Sample Position		
	1	2	3
7	2	3	4
8	2	3	4
9	3	4	5
10	3	4	5
11	4	5	6
12	4	5	6
13	5	6	7
14	5	6	7
15	6	7	8
16	6	7	8

The USAMP field may be used to override the automatic selection, to choose any other clock period at which to start taking the three samples.

Obsolete

19.4 BAUD RATE CALCULATIONS

The UART baud rate is determined by the System Clock frequency and the values in the UOVR, UPSR, and UBAUD registers. Unless the System Clock is an exact multiple of the baud rate, there will be a small amount of error in the resulting baud rate. The equation to calculate the baud rate is:

$$BR = \frac{SYS_CLK}{(O \times N \times P)}$$

where BR is the baud rate, SYS_CLK is the System Clock, O is the oversample rate, N is the baud rate divisor + 1, and P is the prescaler divisor selected by the UPSR register.

Assuming a System Clock of 5 MHz, a desired baud rate of 9600, and an oversample rate of 16, the N × P term according to the equation above is:

$$N \times P = \frac{(5 \times 10^6)}{(16 \times 9600)} = 32.552$$

The N × P term is then divided by each Prescaler Factor from Table 44 to obtain a value closest to an integer. The factor for this example is 6.5.

$$N = \frac{32.552}{6.5} = 5.008 \quad (N = 5)$$

The baud rate register is programmed with a baud rate divisor of 4 (N = baud rate divisor + 1). This produces a baud clock of:

$$BR = \frac{(5 \times 10^6)}{(16 \times 5 \times 6.5)} = 9615.385$$

$$\%error = \frac{(9615.385 - 9600)}{9600} = 0.16$$

Note that the percent error is much lower than would be possible without the non-integer prescaler factor. Error greater than 3% is marginal and may result in unreliable operation. Refer to Table 46 below for more examples.

Table 46 Baud Rate Programming

Baud Rate	SYS_CLK = 48 MHz				SYS_CLK = 24 MHz				SYS_CLK = 12 MHz				SYS_CLK = 10 MHz			
	O	N	P	%err	O	N	P	%err	O	N	P	%err	O	N	P	%err
300	16	2000	5.0	0.00	16	2000	2.5	0.00	16	1250	2.0	0.00	13	1282	2.0	0.00
600	16	2000	2.5	0.00	16	1250	2.0	0.00	16	1250	1.0	0.00	13	1282	1.0	0.00
1200	16	1250	2.0	0.00	16	1250	1.0	0.00	16	625	1.0	0.00	13	641	1.0	0.00
1800	7	401	9.5	0.00	8	1111	1.5	0.01	12	101	5.5	0.01	12	463	1.0	0.01
2000	16	1500	1.0	0.00	16	750	1.0	0.00	16	250	1.5	0.00	16	125	2.5	0.00
2400	16	1250	1.0	0.00	16	625	1.0	0.00	16	125	2.5	0.00	9	463	1.0	0.01
3600	8	1111	1.5	0.01	12	101	5.5	0.01	11	202	1.5	0.01	11	101	2.5	0.01
4800	16	625	1.0	0.00	16	125	2.5	0.00	10	250	1.0	0.00	7	119	2.5	0.04
7200	12	101	5.5	0.01	11	303	1.0	0.01	11	101	1.5	0.01	10	139	1.0	0.08
9600	16	125	2.5	0.00	10	250	1.0	0.00	10	125	1.0	0.00	7	149	1.0	0.13
14400	11	202	1.5	0.01	11	101	1.5	0.01	14	17	3.5	0.04	14	33	1.5	0.21
19200	10	250	1.0	0.00	10	125	1.0	0.00	10	25	2.5	0.00	16	13	2.5	0.16
38400	10	125	1.0	0.00	10	25	2.5	0.00	16	13	1.5	0.16	8	13	2.5	0.16
56000	7	49	2.5	0.04	13	33	1.0	0.10	13	11	1.5	0.10	7	17	1.5	0.04
115200	7	17	3.5	0.04	13	16	1.0	0.16	13	8	1.0	0.16	7	5	2.5	0.79
128000	15	25	1.0	0.00	15	5	2.5	0.00	11	1	8.5	0.27	12	1	6.5	0.16
230400	13	16	1.0	0.16	13	8	1.0	0.16	13	4	1.0	0.16	11	4	1.0	1.36
345600	9	1	15.5	0.44	10	7	1.0	0.79	10	1	3.5	0.79				
460800	13	8	1.0	0.16	13	4	1.0	0.16	13	2	1.0	0.16	11	2	1.0	1.36
576000	8	7	1.5	0.79	12	1	3.5	0.79	14	1	1.5	0.79	7	1	2.5	0.79
691200	10	7	1.0	0.79	10	1	3.5	0.79	7	1	2.5	0.79				
806400	7	1	8.5	0.04	15	2	1.0	0.79	10	1	1.5	0.79				
921600	13	4	1.0	0.16	13	2	1.0	0.16	13	1	1.0	0.16				
1105920	11	4	1.0	1.36	11	2	1.0	1.36					9	1	1.0	0.47
1382400	10	1	3.5	0.79	7	1	2.5	0.79								
1536000	9	1	3.5	0.79	8	2	1.0	2.34								

Obsolete

Table 47 Baud Rate Programming

Baud Rate	SYS_CLK = 8 MHz				SYS_CLK = 6 MHz				SYS_CLK = 5 MHz				SYS_CLK = 4 MHz			
	O	N	P	%err	O	N	P	%err	O	N	P	%err	O	N	P	%err
300	7	401	9.5	0.00	16	1250	1.0	0.00	11	202	7.5	0.01	12	202	5.5	0.01
600	12	1111	1.0	0.01	16	625	1.0	0.00	11	101	7.5	0.01	12	101	5.5	0.01
1200	12	101	5.5	0.01	16	125	2.5	0.00	10	119	3.5	0.04	11	202	1.5	0.01
1800	8	101	5.5	0.01	11	303	1.0	0.01	11	101	2.5	0.01	11	202	1.0	0.01
2000	16	250	1.0	0.00	16	125	1.5	0.00	10	250	1.0	0.00	16	125	1.0	0.00
2400	11	303	1.0	0.01	10	250	1.0	0.00	7	119	2.5	0.04	11	101	1.5	0.01
3600	11	202	1.0	0.01	11	101	1.5	0.01	10	139	1.0	0.08	11	101	1.0	0.01
4800	11	101	1.5	0.01	10	125	1.0	0.00	7	149	1.0	0.13	14	17	3.5	0.04
7200	11	101	1.0	0.01	14	17	3.5	0.04	14	33	1.5	0.21	15	37	1.0	0.10
9600	14	17	3.5	0.04	10	25	2.5	0.00	16	13	2.5	0.16	7	17	3.5	0.04
14400	15	37	1.0	0.10	7	17	3.5	0.04	7	33	1.5	0.21	9	31	1.0	0.44
19200	7	17	3.5	0.04	16	13	1.5	0.16	8	13	2.5	0.16	16	13	1.0	0.16
38400	16	13	1.0	0.16	8	13	1.5	0.16	13	10	1.0	0.16	16	1	6.5	0.16
56000	13	11	1.0	0.10	9	12	1.0	0.79	15	6	1.0	0.79	13	1	5.5	0.10
115200	10	7	1.0	0.79	13	4	1.0	0.16	11	4	1.0	1.36	10	1	3.5	0.79
128000	9	7	1.0	0.79	16	3	1.0	2.34	13	3	1.0	0.16	9	1	3.5	0.79
230400	10	1	3.5	0.79	13	2	1.0	0.16	11	2	1.0	1.36	7	1	2.5	0.79
345600	15	1	1.5	2.88	7	1	2.5	0.79								
460800	7	1	2.5	0.79	13	1	1.0	0.16								
576000	7	2	1.0	0.79	7	1	1.5	0.79								
Baud Rate	**SYS_CLK = 3 MHz**				**SYS_CLK = 2 MHz**				**SYS_CLK = 1 MHz**				**SYS_CLK = 500 kHz**			
	O	N	P	%err	O	N	P	%err	O	N	P	%err	O	N	P	%err
300	16	250	2.5	0.00	12	101	5.5	0.01	11	202	1.5	0.01	11	101	1.5	0.01
600	16	125	2.5	0.00	11	202	1.5	0.01	11	101	1.5	0.01	14	17	3.5	0.04
1200	10	250	1.0	0.00	11	101	1.5	0.01	14	17	3.5	0.04	7	17	3.5	0.04
1800	11	101	1.5	0.01	11	101	1.0	0.01	15	37	1.0	0.10	9	31	1.0	0.44
2000	15	100	1.0	0.00	16	25	2.5	0.00	10	50	1.0	0.00	10	25	1.0	0.00
2400	10	125	1.0	0.00	14	17	3.5	0.04	7	17	3.5	0.04	16	13	1.0	0.16
3600	14	17	3.5	0.04	15	37	1.0	0.10	9	31	1.0	0.44	9	1	15.5	0.44
4800	10	25	2.5	0.00	7	17	3.5	0.04	16	13	1.0	0.16	16	1	6.5	0.16
7200	7	17	3.5	0.04	9	31	1.0	0.44	9	1	15.5	0.44	10	7	1.0	0.79
9600	16	13	1.5	0.16	16	13	1.0	0.16	16	1	6.5	0.16	8	1	6.5	0.16
14400	13	16	1.0	0.16	9	1	15.5	0.44	10	7	1.0	0.79	10	1	3.5	0.79
19200	8	13	1.5	0.16	16	1	6.5	0.16	8	1	6.5	0.16	13	2	1.0	0.16
38400	13	6	1.0	0.16	8	1	6.5	0.16	13	2	1.0	0.16	13	1	1.0	0.16
56000	9	6	1.0	0.79	9	4	1.0	0.79	9	2	1.0	0.79				
115200	13	2	1.0	0.16	7	1	2.5	0.79								
128000	16	1	1.5	2.34	8	2	1.0	2.34								
230400	13	1	1.0	0.16												

Obsolete

20.0 Microwire/SPI Interface

Microwire/Plus is a synchronous serial communications protocol, originally implemented in National Semiconductor's COP8® and HPC families of microcontrollers to minimize the number of connections, and therefore the cost, of communicating with peripherals.

The CP3BT10 has an enhanced Microwire/SPI interface module (MWSPI) that can communicate with all peripherals that conform to Microwire or Serial Peripheral Interface (SPI) specifications. This enhanced Microwire interface is capable of operating as either a master or slave and in 8- or 16-bit mode. Figure 47 shows a typical enhanced Microwire interface application.

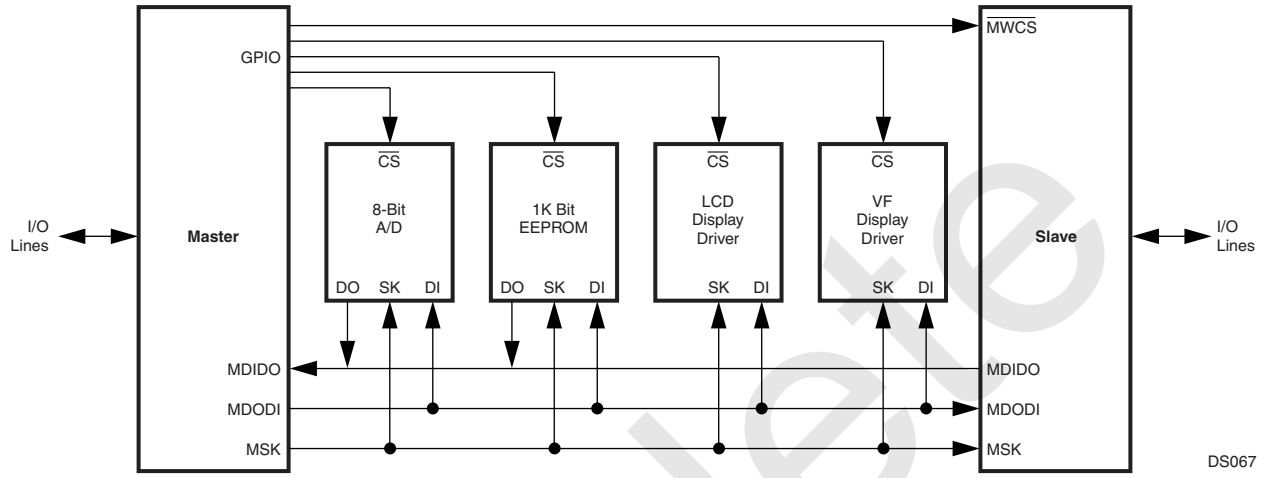

Figure 47. Microwire Interface

The enhanced Microwire interface module includes the following features:

- Programmable operation as a Master or Slave
- Programmable shift-clock frequency (master only)
- Programmable 8- or 16-bit mode of operation
- 8- or 16-bit serial I/O data shift register
- Two modes of clocking data
- Serial clock can be low or high when idle
- 16-bit read buffer
- Busy bit, Read Buffer Full bit, and Overrun bit for polling and as interrupt sources
- Supports multiple masters
- Maximum bit rate of 10M bits/second (master mode) 5M bits/second (slave mode) at 20 MHz System Clock
- Supports very low-end slaves with the Slave Ready output
- Echo back enable/disable (Slave only)

20.1 MICROWIRE OPERATION

The Microwire interface allows several devices to be connected on one three-wire system. At any given time, one of these devices operates as the master while all other devices operate as slaves. The Microwire interface allows the device to operate either as a master or slave transferring 8- or 16-bits of data.

The master device supplies the synchronous clock (MSK) for the serial interface and initiates the data transfer. The slave devices respond by sending (or receiving) the requested data. Each slave device uses the master's clock for serially shifting data out (or in), while the master shifts the data in (or out).

The three-wire system includes: the serial data in signal (MDIDO for master mode, MDODI for slave mode), the serial data out signal (MDODI for master mode, MDIDO for slave mode), and the serial clock (MSK).

In slave mode, an optional fourth signal ($\overline{\text{MWCS}}$) may be used to enable the slave transmit. At any given time, only one slave can respond to the master. Each slave device has its own chip select signal ($\overline{\text{MWCS}}$) for this purpose.

Figure 48 shows a block diagram of the enhanced Microwire serial interface in the device.

Obsolete

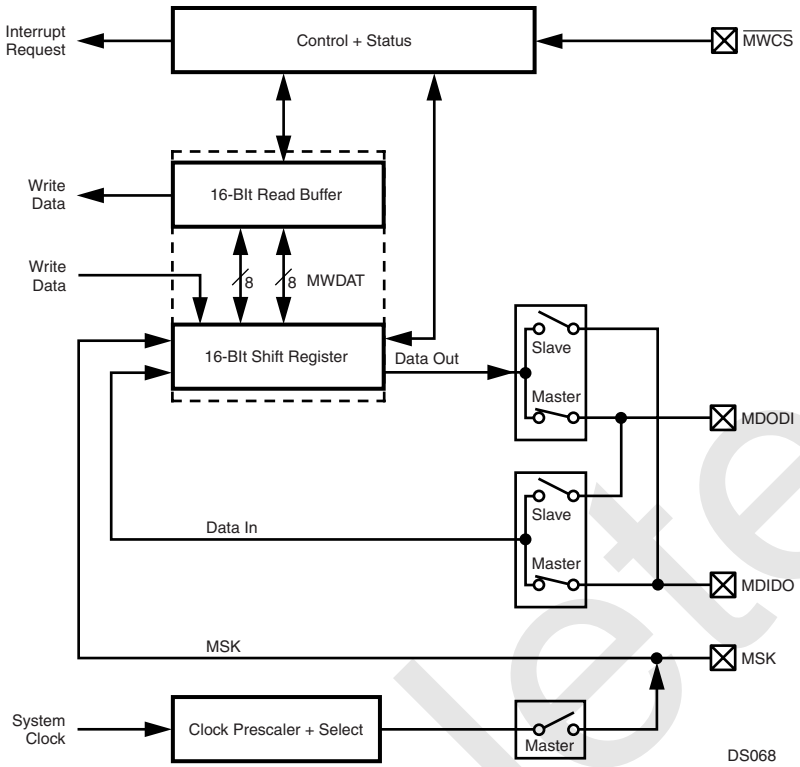

Figure 48. Microwire Block Diagram

20.1.1 Shifting

The Microwire interface is a full duplex transmitter/receiver. A 16-bit shifter, which can be split into a low and high byte, is used for both transmitting and receiving. In 8-bit mode, only the lower 8-bits are used to transfer data. The transmitted data is shifted out through MDODI pin (master mode) or MDIDO pin (slave mode), starting with the most significant bit. At the same time, the received data is shifted in through MDIDO pin (master mode) or MDODI pin (slave mode), also starting with the most significant bit first.

The shift in and shift out are controlled by the MSK clock. In each clock cycle of MSK, one bit of data is transmitted/received. The 16-bit shifter is accessible as the MWDAT register. Reading the MWDAT register returns the value in the read buffer. Writing to the MWDAT register updates the 16-bit shifter.

20.1.2 Reading

The enhanced Microwire interface implements a double buffer on read. As illustrated in Figure 48, the double read buffer consists of the 16-bit shifter and a buffer, called the read buffer.

The 16-bit shifter loads the read buffer with new data when the data transfer sequence is completed and previous data in the read buffer has been read. In master mode, an Overrun error occurs when the read buffer is full, the 16-bit shifter is full and a new data transfer sequence starts.

When 8-bit mode is selected, the lower byte of the shift register is loaded into the lower byte of the read buffer and the read buffer's higher byte remains unchanged.

The "Receive Buffer Full" (RBF) bit indicates if the MWDAT register holds valid data. The OVR bit indicates that an overrun condition has occurred.

20.1.3 Writing

The "Microwire Busy" (BSY) bit indicates whether the MWDAT register can be written. All write operations to the MWDAT register update the shifter while the data contained in the read buffer is not affected. Undefined results will occur if the MWDAT register is written to while the BSY bit is set.

20.1.4 Clocking Modes

Two clocking modes are supported: the normal mode and the alternate mode.

In the normal mode, the output data, which is transmitted on the MDODI pin (master mode) or the MDIDO pin (slave mode), is clocked out on the falling edge of the shift clock MSK. The input data, which is received via the MDIDO pin (master mode) or the MDODI pin (slave mode), is sampled on the rising edge of MSK.

In the alternate mode, the output data is shifted out on the rising edge of MSK on the MDODI pin (master mode) or MDIDO pin (slave mode). The input data, which is received via MDIDO pin (master mode) or MDODI pin (slave mode), is sampled on the falling edge of MSK.

The clocking modes are selected with the MSKM bit. The SCIDL bit allows selection of the value of MSK when it is idle (when there is no data being transferred). Various MSK clock frequencies can be programmed via the MCDV bits. Figures 27, 28, 29, and 30 show the data transfer timing for

Obsolete

the normal and the alternate modes with the SCIDL bit equal to 0 and equal to 1.

Note that when data is shifted out on MDODI (master mode) or MDIDO (slave mode) on the leading edge of the MSK clock, bit 14 (16-bit mode) is shifted out on the second leading edge of the MSK clock. When data are shifted out on MDODI (master mode) or MDIDO (slave mode) on the trailing edge of MSK, bit 14 (16-bit mode) is shifted out on the first trailing edge of MSK.

20.2 MASTER MODE

In Master mode, the MSK pin is an output for the shift clock, MSK. When data is written to the (MWDAT register), eight or sixteen MSK clocks, depending on the mode selected, are generated to shift the 8 or 16 bits of data and then MSK goes idle again. The MSK idle state can be either high or low, depending on the SCIDL bit.

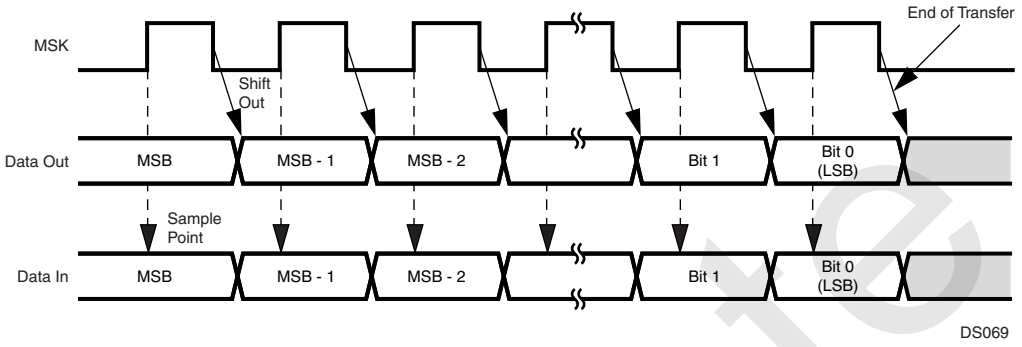

Figure 49. Normal Mode (SCIDL = 0)

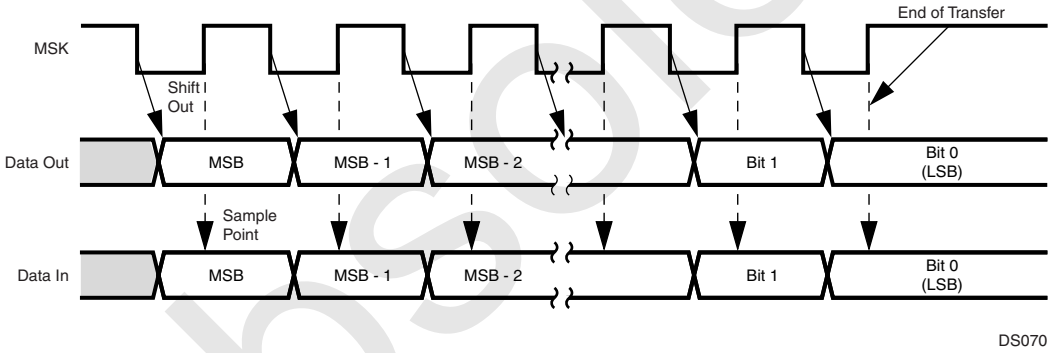

Figure 50. Normal Mode (SCIDL = 1)

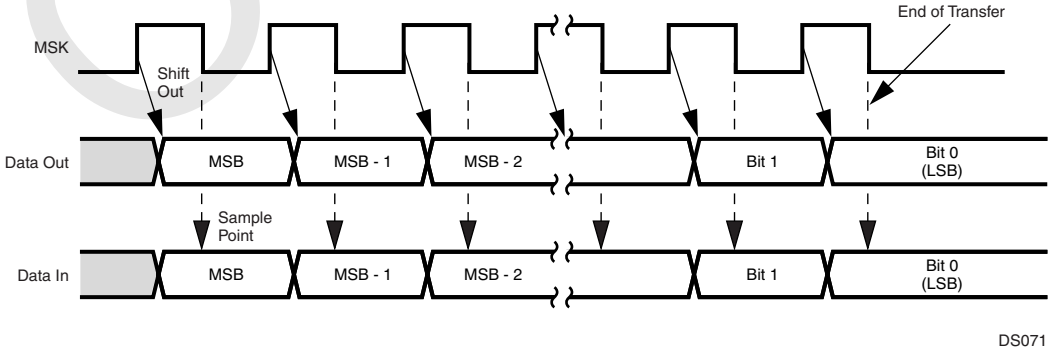

Figure 51. Alternate Mode (SCIDL = 0)

Obsolete

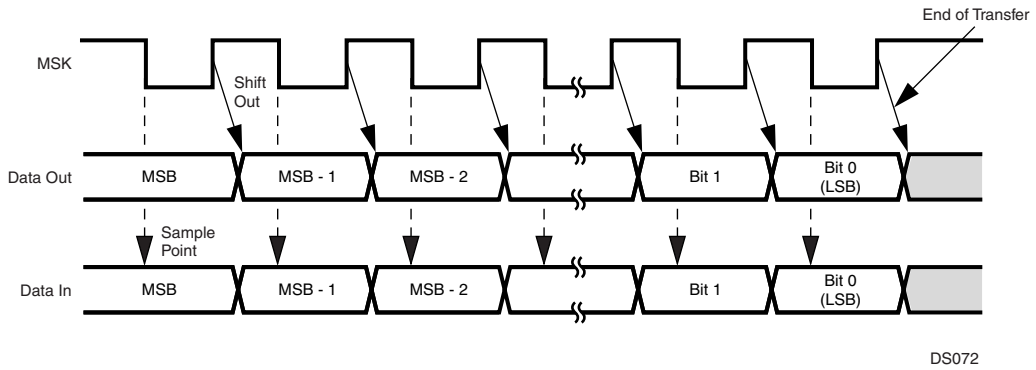

Figure 52. Alternate Mode (SCIDL = 1)

20.3 SLAVE MODE

In Slave mode, the MSK pin is an input for the shift clock MSK. MDIDO is placed in TRI-STATE mode when $\overline{\text{MWCS}}$ is inactive. Data transfer is enabled when $\overline{\text{MWCS}}$ is active.

The slave starts driving MDIDO when $\overline{\text{MWCS}}$ is activated. The most significant bit (lower byte in 8-bit mode or upper byte in 16-bit mode) is output onto the MDIDO pin first. After eight or sixteen clocks (depending on the selected mode), the data transfer is completed.

If a new shift process starts before MWDAT was written, i.e., while MWDAT does not contain any valid data, and the "Echo Enable" (ECHO) bit is set, the data received from MDODI is transmitted on MDIDO in addition to being shifted to MWDAT. If the ECHO bit is clear, the data transmitted on MDIDO is the data held in the MWDAT register, regardless of its validity. The master may negate the $\overline{\text{MWCS}}$ signal to synchronize the bit count between the master and the slave. In the case that the slave is the only slave in the system, $\overline{\text{MWCS}}$ can be tied to VSS.

20.4 INTERRUPT GENERATION

An interrupt is generated in any of the following cases:

- When the read buffer is full (RBF = 1) and the "Enable Interrupt for Read" bit is set (EIR = 1).
- Whenever the shifter is not busy, i.e. the BSY bit is clear (BSY = 0) and the "Enable Interrupt for Write" bit is set (EIW = 1).
- When an overrun condition occurs (OVR is set) and the "Enable Interrupt on Overrun" bit is set (MEIO = 1). This usage is restricted to master mode.

In addition, $\overline{\text{MWCS}}$ is an input to the MIWU (see Section 13.0), which can be programmed to generate an edge-triggered interrupt.

Figure 53 illustrates the various interrupt capabilities of this module.

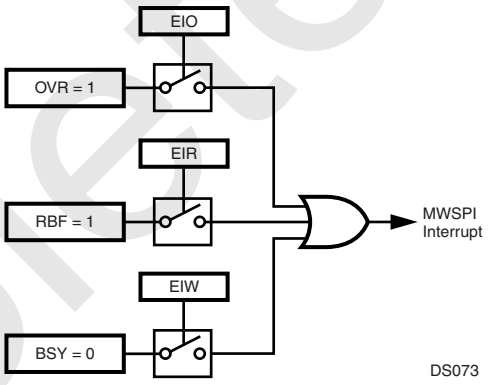

Figure 53. MWSPI Interrupts

20.5 MICROWIRE INTERFACE REGISTERS

Software interacts with the Microwire interface by accessing the Microwire registers. There are three such registers:

Table 48 Microwire Interface Registers

Name	Address	Description
MWDAT	FF FE60h	Microwire Data Register
MWCTL1	FF FE62h	Microwire Control Register
MWSTAT	FF FE64h	Microwire Status Register

20.5.1 Microwire Data Register (MWDAT)

The MWDAT register is a word-wide, read/write register used to transmit and receive data through the MDODI and MDIDO pins. Figure 54 shows the hardware structure of the register.

Obsolete

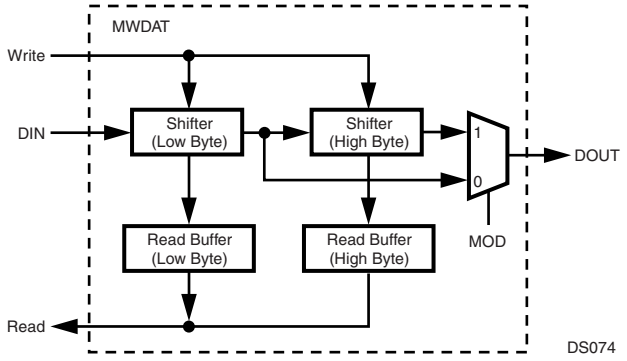

Figure 54. MWDAT Register

20.5.2 Microwire Control Register (MWCTL1)

The MWCTL1 register is a word-wide, read/write register used to control the Microwire module. To avoid clock glitches, the MWEN bit must be clear while changing the states of any other bits in the register. At reset, all non-reserved bits are cleared. The register format is shown below.

7	6	5	4	3	2	1	0
SCM	EIW	EIR	EIO	ECHO	MOD	MNS	MWEN

15	9	8
SCDV		SCIDL

MWEN The Microwire Enable bit controls whether the Microwire interface module is enabled.
0 – Microwire module disabled.
1 – Microwire module enabled.
Clearing this bit disables the module, clears the status bits in the Microwire status register (the BSY, RBF, and OVR bits in MWSTAT), and places the Microwire interface pins in the states described below.

Pin	State When Disabled
MSK	Master – SCIDL Bit Slave – Input
$\overline{\text{MWCS}}$	Input
MDIDO	Master – Input Slave – TRI-STATE
MDODI	Master – Known value Slave – Input

MNS The Master/Slave Select bit controls whether the CP3BT10 is a master or slave. When clear, the device operates as a slave. When set, the device operates as the master.
0 – CP3BT10 is slave.
1 – CP3BT10 is master.

MOD The Mode Select bit controls whether 8- or 16-bit mode is used. When clear, the device operates in 8-bit mode. When set, the device operates in 16-bit mode. This bit must only be changed when the module is disabled or idle (MWSTAT.BSY = 0).
0 – 8-bit mode.
1 – 16-bit mode.

ECHO The Echo Back bit controls whether the echo back function is enabled in slave mode. This bit must be written only when the Microwire interface is idle (MWSTAT.BSY=0). The ECHO bit is ignored in master mode. The MWDAT register is valid from the time the register has been written until the end of the transfer. In the echo back mode, MDODI is transmitted (echoed back) on MDIDO if the MWDAT register does not contain any valid data. With the echo back function disabled, the data held in the MWDAT register is transmitted on MDIDO, whether or not the data is valid.
0 – Echo back disabled.
1 – Echo back enabled.

EIO The Enable Interrupt on Overrun bit enables or disables the overrun error interrupt. When set, an interrupt is generated when the Receive Overrun Error bit (MWSTAT.OVR) is set. Otherwise, no interrupt is generated when an overrun error occurs. This bit must only be enabled in master mode.
0 – Disable overrun error interrupts.
1 – Enable overrun error interrupts.

Obsolete

EIR — The Enable Interrupt for Read bit controls whether an interrupt is generated when the read buffer becomes full. When set, an interrupt is generated when the Read Buffer Full bit (MWSTAT.RBF) is set. Otherwise, no interrupt is generated when the read buffer is full.
0 – No read buffer full interrupt.
1 – Interrupt when read buffer becomes full.

EIW — The Enable Interrupt for Write bit controls whether an interrupt is generated when the Busy bit (MWSTAT.BSY) is cleared, which indicates that a data transfer sequence has been completed and the read buffer is ready to receive the new data. Otherwise, no interrupt is generated when the Busy bit is cleared.
0 – No interrupt on data transfer complete.
1 – Interrupt on data transfer complete.

SCM — The Shift Clock Mode bit selects between the normal clocking mode and the alternate clocking mode. In the normal mode, the output data is clocked out on the falling edge of MSK and the input data is sampled on the rising edge of MSK. In the alternate mode, the output data is clocked out on the rising edge of MSK and the input data is sampled on the falling edge of MSK.
0 – Normal clocking mode.
1 – Alternate clocking mode.

SCIDL — The Shift Clock Idle bit controls the value of the MSK output when the Microwire module is idle. This bit must be changed only when the Microwire module is disabled (MWEN = 0) or when no bus transaction is in progress (MWSTAT.BSY = 0).
0 – MSK is low when idle.
1 – MSK is high when idle

SCDV — The Shift Clock Divider Value field specifies the divisor used for generating the MSK shift clock from the System Clock. The divisor is 2 × (MCDV[6:0] + 1). Valid values are 0000001b to 1111111b, so the division ratio may range from 3 to 256. This field is ignored in slave mode (MWCTL1.MMNS=0).

20.5.3 Microwire Status Register (MWSTAT)

The MWSTAT register is a word-wide, read-only register that shows the current status of the Microwire interface module. At reset, all non-reserved bits are clear. The register format is shown below.

15 … 3	2	1	0
Reserved	OVR	RBF	BSY

BSY — The Busy bit, when set, indicates that the Microwire shifter is busy. In master mode, the BSY bit is set when the MWDAT register is written. In slave mode, the bit is set on the first leading edge of MSK when $\overline{\text{MWCS}}$ is asserted or when the MWDAT register is written, whichever occurs first. In both master and slave modes, this bit is cleared when the Microwire data transfer sequence is completed and the read buffer is ready to receive the new data; in other words, when the previous data held in the read buffer has already been read. If the previous data in the read buffer has not been read and new data has been received into the shift register, the BSY bit will not be cleared, as the transfer could not be completed because the contents of the shift register could not be transferred into the read buffer.
0 – Microwire shifter is not busy.
1 – Microwire shifter is busy.

RBF — The Read Buffer Full bit, when set, indicates that the Microwire read buffer is full and ready to be read by software. It is set when the shifter loads the read buffer, which occurs upon completion of a transfer sequence if the read buffer is empty. The RBF bit is updated when the MWDAT register is read. At that time, the RBF bit is cleared if the shifter does not contain any new data (in other words, the shifter is not receiving data or has not yet received a full byte of data). The RBF bit remains set if the shifter already holds new data at the time that MWDAT is read. In that case, MWDAT is immediately reloaded with the new data and is ready to be read by software.
0 – Microwire read buffer is not full.
1 – Microwire read buffer is full.

OVR — The Receive Overrun Error bit, when set in master mode, indicates that a receive overrun error has occurred. This error occurs when the read buffer is full, the 8-bit shifter is full, and a new data transfer sequence starts. This bit is undefined in slave mode. The OVR bit, once set, remains set until cleared by software. Software clears this bit by writing a 1 to its bit position. Writing a 0 to this bit position has no effect. No other bits in the MWSTAT register are affected by a write operation to the register.
0 – No receive overrun error has occurred.
1 – Receive overrun error has occurred.

Obsolete

21.0 ACCESS.bus Interface

The ACCESS.bus interface module (ACB) is a two-wire serial interface compatible with the ACCESS.bus physical layer. It permits easy interfacing to a wide range of low-cost memories and I/O devices, including: EEPROMs, SRAMs, timers, A/D converters, D/A converters, clock chips, and peripheral drivers. It is compatible with Intel's SMBus and Philips' I^2C bus. The module can be configured as a bus master or slave, and can maintain bidirectional communications with both multiple master and slave devices.

This section presents an overview of the bus protocol, and its implementation by the module.

- ACCESS.bus master and slave
- Supports polling and interrupt-controlled operation
- Generate a wake-up signal on detection of a Start Condition, while in power-down mode
- Optional internal pull-up on SDA and SCL pins

21.1 ACB PROTOCOL OVERVIEW

The ACCESS.bus protocol uses a two-wire interface for bidirectional communication between the devices connected to the bus. The two interface signals are the Serial Data Line (SDA) and the Serial Clock Line (SCL). These signals should be connected to the positive supply, through pull-up resistors, to keep the signals high when the bus is idle.

The ACCESS.bus protocol supports multiple master and slave transmitters and receivers. Each bus device has a unique address and can operate as a transmitter or a receiver (though some peripherals are only receivers).

During data transactions, the master device initiates the transaction, generates the clock signal, and terminates the transaction. For example, when the ACB initiates a data transaction with an ACCESS.bus peripheral, the ACB becomes the master. When the peripheral responds and transmits data to the ACB, their master/slave (data transaction initiator and clock generator) relationship is unchanged, even though their transmitter/receiver functions are reversed.

21.1.1 Data Transactions

One data bit is transferred during each clock period. Data is sampled during the high phase of the serial clock (SCL). Consequently, throughout the clock high phase, the data must remain stable (see Figure 55). Any change on the SDA signal during the high phase of the SCL clock and in the middle of a transaction aborts the current transaction. New data must be driven during the low phase of the SCL clock. This protocol permits a single data line to transfer both command/control information and data using the synchronous serial clock.

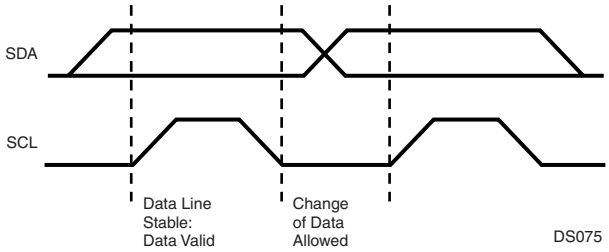

Figure 55. Bit Transfer

Each data transaction is composed of a Start Condition, a number of byte transfers (programmed by software), and a Stop Condition to terminate the transaction. Each byte is transferred with the most significant bit first, and after each byte, an Acknowledge signal must follow.

At each clock cycle, the slave can stall the master while it handles the previous data, or prepares new data. This can be performed for each bit transferred or on a byte boundary by the slave holding SCL low to extend the clock-low period. Typically, slaves extend the first clock cycle of a transfer if a byte read has not yet been stored, or if the next byte to be transmitted is not yet ready. Some microcontrollers with limited hardware support for ACCESS.bus extend the access after each bit, to allow software time to handle this bit.

Start and Stop

The ACCESS.bus master generates Start and Stop Conditions (control codes). After a Start Condition is generated, the bus is considered busy and it retains this status until a certain time after a Stop Condition is generated. A high-to-low transition of the data line (SDA) while the clock (SCL) is high indicates a Start Condition. A low-to-high transition of the SDA line while the SCL is high indicates a Stop Condition (Figure 56).

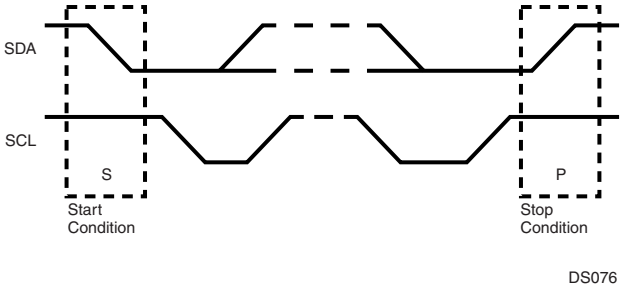

Figure 56. Start and Stop Conditions

In addition to the first Start Condition, a repeated Start Condition can be generated in the middle of a transaction. This allows another device to be accessed, or a change in the direction of the data transfer.

Acknowledge Cycle

The Acknowledge Cycle consists of two signals: the acknowledge clock pulse the master sends with each byte transferred, and the acknowledge signal sent by the receiving device (Figure 57).

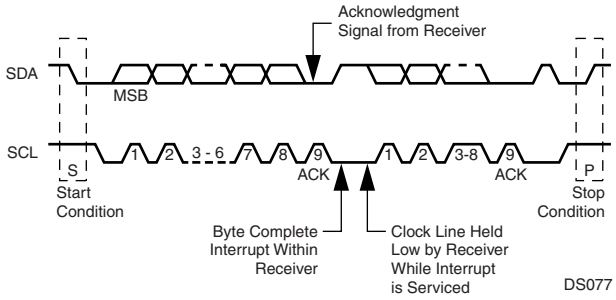

Figure 57. ACCESS.bus Data Transaction

The master generates the acknowledge clock pulse on the ninth clock pulse of the byte transfer. The transmitter releases the SDA line (permits it to go high) to allow the receiver to send the acknowledge signal. The receiver must pull down the SDA line during the acknowledge clock pulse, which signals the correct reception of the last data byte, and its readiness to receive the next byte. Figure 58 illustrates the acknowledge cycle.

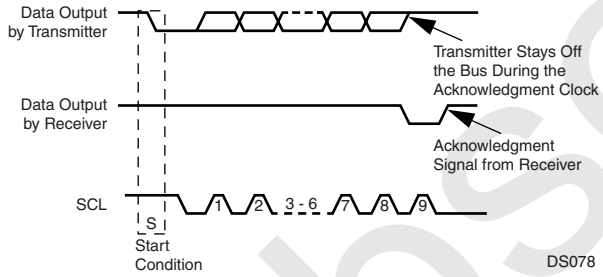

Figure 58. ACCESS.bus Acknowledge Cycle

The master generates an acknowledge clock pulse after each byte transfer. The receiver sends an acknowledge signal after every byte received. There are two exceptions to the "acknowledge after every byte" rule.

- When the master is the receiver, it must indicate to the transmitter an end-of-data condition by not-acknowledging ("negative acknowledge") the last byte clocked out of the slave. This "negative acknowledge" still includes the acknowledge clock pulse (generated by the master), but the SDA line is not pulled down.
- When the receiver is full, otherwise occupied, or a problem has occurred, it sends a negative acknowledge to indicate that it cannot accept additional data bytes.

Addressing Transfer Formats

Each device on the bus has a unique address. Before any data is transmitted, the master transmits the address of the slave being addressed. The slave device should send an acknowledge signal on the SDA signal, once it recognizes its address.

The address is the first seven bits after a Start Condition. The direction of the data transfer (R/$\overline{W}$) depends on the bit sent after the address (the eighth bit). A low-to-high transition during a SCL high period indicates the Stop Condition, and ends the transaction (Figure 59).

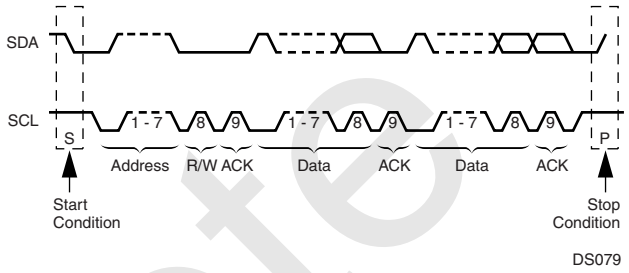

Figure 59. A Complete ACCESS.bus Data Transaction

When the address is sent, each device in the system compares this address with its own. If there is a match, the device considers itself addressed and sends an acknowledge signal. Depending upon the state of the R/$\overline{W}$ bit (1 = read, 0 = write), the device acts as a transmitter or a receiver.

The ACCESS.bus protocol allows sending a general call address to all slaves connected to the bus. The first byte sent specifies the general call address (00h) and the second byte specifies the meaning of the general call (for example, "Write slave address by software only"). Those slaves that require the data acknowledge the call and become slave receivers; the other slaves ignore the call.

Arbitration on the Bus

Arbitration is required when multiple master devices attempt to gain control of the bus simultaneously. Control of the bus is initially determined according to address bits and clock cycle. If the masters are trying to address the same bus device, data comparisons determine the outcome of this arbitration. In master mode, the device immediately aborts a transaction if the value sampled on the SDA lines differs from the value driven by the device. (Exceptions to this rule are SDA while receiving data; in these cases the lines may be driven low by the slave without causing an abort.)

The SCL signal is monitored for clock synchronization and allows the slave to stall the bus. The actual clock period will be the one set by the master with the longest clock period or by the slave stall period. The clock high period is determined by the master with the shortest clock high period.

When an abort occurs during the address transmission, the master that identifies the conflict should give up the bus, switch to slave mode, and continue to sample SDA to see if it is being addressed by the winning master on the ACCESS.bus.

Obsolete

21.2 ACB FUNCTIONAL DESCRIPTION

The ACB module provides the physical layer for an ACCESS.bus compliant serial interface. The module is configurable as either a master or slave device. As a slave, the ACB module may issue a request to become the bus master.

21.2.1 Master Mode

An ACCESS.bus transaction starts with a master device requesting bus mastership. It sends a Start Condition, followed by the address of the device it wants to access. If this transaction is successfully completed, software can assume that the device has become the bus master.

For a device to become the bus master, software should perform the following steps:

1. Set the ACBCTL1.START bit, and configure the ACBCTL1.INTEN bit to the desired operation mode (Polling or Interrupt). This causes the ACB to issue a Start Condition on the ACCESS.bus, as soon as the ACCESS.bus is free (ACBCST.BB=0). It then stalls the bus by holding SCL low.
2. If a bus conflict is detected, (i.e., some other device pulls down the SCL signal before this device does), the ACBST.BER bit is set.
3. If there is no bus conflict, the ACBST.MASTER and ACBST.SDAST bits are set.
4. If the ACBCTL1.INTEN bit is set, and either the ACBST.BER bit or the ACBST.SDAST bit is set, an interrupt is sent to the ICU.

Sending the Address Byte

Once this device is the active master of the ACCESS.bus (ACBST.MASTER = 1), it can send the address on the bus. The address should not be this device's own address as specified in the ACBADDR.ADDR field if the ACBADDR.SAEN bit is set or the ACBADDR2.ADDR field if the ACBADDR2.SAEN bit is set, nor should it be the global call address if the ACBST.GCMTCH bit is set.

To send the address byte use the following sequence:

1. Configure the ACBCTL1.INTEN bit according to the desired operation mode. For a receive transaction where software wants only one byte of data, it should set the ACBCTL1.ACK bit. If only an address needs to be sent, set the ACBCTL1.STASTRE bit.
2. Write the address byte (7-bit target device address), and the direction bit, to the ACBSDA register. This causes the module to generate a transaction. At the end of this transaction, the acknowledge bit received is copied to the ACBST.NEGACK bit. During the transaction, the SDA and SCL signals are continuously checked for conflict with other devices. If a conflict is detected, the transaction is aborted, the ACBST.BER bit is set, and the ACBST.MASTER bit is cleared.
3. If the ACBCTL1.STASTRE bit is set, and the transaction was successfully completed (i.e., both the ACBST.BER and ACBST.NEGACK bits are cleared), the ACBST.STASTR bit is set. In this case, the ACB stalls any further ACCESS.bus operations (i.e., holds SCL low). If the ACBCTL1.INTE bit is set, it also sends an interrupt to the ICU.
4. If the requested direction is transmit, and the start transaction was completed successfully (i.e., neither the ACBST.NEGACK nor ACBST.BER bit is set, and no other master has accessed the device), the ACBST.SDAST bit is set to indicate that the module is waiting for service.
5. If the requested direction is receive, the start transaction was completed successfully, and the ACBCTL1.STASTRE bit is clear, the module starts receiving the first byte automatically.
6. Check that both the ACBST.BER and ACBST.NEGACK bits are clear. If the ACBCTL1.INTEN bit is set, an interrupt is generated when either the ACBST.BER or ACBST.NEGACK bit is set.

Master Transmit

After becoming the bus master, the device can start transmitting data on the ACCESS.bus. To transmit a byte, software must:

1. Check that the BER and NEGACK bits in the ACBST register are clear and the ACBST.SDAST bit is set. Also, if the ACBCTL1.STASTRE bit is set, check that the ACBST.STASTR bit is clear.
2. Write the data byte to be transmitted to the ACBSDA register.

When the slave responds with a negative acknowledge, the ACBST.NEGACK bit is set and the ACBST.SDAST bit remains cleared. In this case, if the ACBCTL1.INTEN bit is set, an interrupt is sent to the core.

Master Receive

After becoming the bus master, the device can start receiving data on the ACCESS.bus. To receive a byte, software must:

1. Check that the ACBST.SDAST bit is set and the ACBST.BER bit is clear. Also, if the ACBCTL1.STASTRE bit is set, check that the ACBST.STASTR bit is clear.
2. Set the ACBCTL1.ACK bit, if the next byte is the last byte that should be read. This causes a negative acknowledge to be sent.
3. Read the data byte from the ACBSDA register.

Master Stop

A Stop Condition may be issued only when this device is the active bus master (ACBST.MASTRER = 1). To end a transaction, set the ACBCTL1.STOP bit before clearing the current stall bit (i.e., the ACBST.SDAST, ACBST.NEGACK, or ACBST.STASTR bit). This causes the module to send a Stop Condition immediately, and clear the ACBCTL1.STOP bit.

Master Bus Stall

The ACB module can stall the ACCESS.bus between transfers while waiting for the core's response. The ACCESS.bus is stalled by holding the SCL signal low after the acknowledge cycle. Note that this is interpreted as the beginning of the following bus operation. Software must make sure that the next operation is prepared before the bit that causes the bus stall is cleared.

Obsolete

The bits that can cause a stall in master mode are:

- Negative acknowledge after sending a byte (ACBSTNEGACK = 1).
- ACBST.SDAST bit is set.
- If the ACBCTL1.STASTRE bit is set, after a successful start (ACBST.STASTR = 1).

Repeated Start

A repeated start is performed when this device is already the bus master (ACBST.MASTER = 1). In this case, the ACCESS.bus is stalled and the ACB waits for the core handling due to: negative acknowledge (ACBST.NEGACK = 1), empty buffer (ACBST.SDAST = 1), or a stop-after-start (ACBST.STASTR = 1).

For a repeated start:

1. Set the ACBCTL1.START bit.
2. In master receive mode, read the last data item from the ACBSDA register.
3. Follow the address send sequence, as described in "Sending the Address Byte" on page 132.
4. If the ACB was waiting for handling due to ACBST.STASTR = 1, clear it only after writing the requested address and direction to the ACBSDA register.

Master Error Detections

The ACB detects illegal Start or Stop Conditions (i.e., a Start or Stop Condition within the data transfer, or the acknowledge cycle) and a conflict on the data lines of the ACCESS.bus. If an illegal action is detected, the BER bit is set, and the MASTER mode is exited (the MASTER bit is cleared).

Bus Idle Error Recovery

When a request to become the active bus master or a restart operation fails, the ACBST.BER bit is set to indicate the error. In some cases, both this device and the other device may identify the failure and leave the bus idle. In this case, the start sequence may not be completed and the ACCESS.bus may remain deadlocked.

To recover from deadlock, use the following sequence:

1. Clear the ACBST.BER and ACBCST.BB bits.
2. Wait for a time-out period to check that there is no other active master on the bus (i.e., the ACBCST.BB bit remains clear).
3. Disable, and re-enable the ACB to put it in the non-addressed slave mode.
4. At this point, some of the slaves may not identify the bus error. To recover, the ACB becomes the bus master by issuing a Start Condition and sends an address field; then issue a Stop Condition to synchronize all the slaves.

21.2.2 Slave Mode

A slave device waits in Idle mode for a master to initiate a bus transaction. Whenever the ACB is enabled, and it is not acting as a master (i.e., ACBST.MASTER = 0), it acts as a slave device.

Once a Start Condition on the bus is detected, this device checks whether the address sent by the current master matches either:

- The ACBADDR.ADDR value if the ACBADDR.SAEN bit is set.
- The ACBADDR2.ADDR value if the ACBADDR2.SAEN bit is set.
- The general call address if the ACBCTL1.GCM bit is set.

This match is checked even when the ACBST.MASTER bit is set. If a bus conflict (on SDA or SCL) is detected, the ACBST.BER bit is set, the ACBST.MASTER bit is cleared, and this device continues to search the received message for a match. If an address match, or a global match, is detected:

1. This device asserts its data pin during the acknowledge cycle.
2. The ACBCST.MATCH, ACBCST.MATCHAF (or ACBCST.GCMTCH if it is a global call address match, or ACBCST.ARPMATCH if it is an ARP address), and ACBST.NMATCH in the ACBCST register are set. If the ACBST.XMIT bit is set (i.e., slave transmit mode), the ACBST.SDAST bit is set to indicate that the buffer is empty.
3. If the ACBCTL1.INTEN bit is set, an interrupt is generated if both the INTEN and NMINTE bits in the ACBCTL1 register are set.
4. Software then reads the ACBST.XMIT bit to identify the direction requested by the master device. It clears the ACBST.NMATCH bit so future byte transfers are identified as data bytes.

Slave Receive and Transmit

Slave Receive and Transmit are performed after a match is detected and the data transfer direction is identified. After a byte transfer, the ACB extends the acknowledge clock until software reads or writes the ACBSDA register. The receive and transmit sequence are identical to those used in the master routine.

Slave Bus Stall

When operating as a slave, this device stalls the ACCESS.bus by extending the first clock cycle of a transaction in the following cases:

— The ACBST.SDAST bit is set.
— The ACBST.NMATCH, and ACBCTL1.NMINTE bits are set.

Slave Error Detections

The ACB detects illegal Start and Stop Conditions on the ACCESS.bus (i.e., a Start or Stop Condition within the data transfer or the acknowledge cycle). When an illegal Start or Stop Condition is detected, the BER bit is set and the MATCH and GMATCH bits are cleared, causing the module to be an unaddressed slave.

Obsolete

Power Down

When this device is in Power Save, Idle, or Halt mode, the ACB module is not active but retains its status. If the ACB is enabled (ACBCTL2.ENABLE = 1) on detection of a Start Condition, a wake-up signal is issued to the MIWU module (see Section 13.0). Use this signal to switch this device to Active mode.

The ACB module cannot check the address byte for a match following the start condition that caused the wake-up event for this device. The ACB responds with a negative acknowledge, and the device should resend both the Start Condition and the address after this device has had time to wake up.

Check that the ACBCST.BUSY bit is inactive before entering Power Save, Idle, or Halt mode. This guarantees that the device does not acknowledge an address sent and stop responding later.

21.2.3 SDA and SCL Pins Configuration

The SDA and SCL pins are driven as open-drain signals. For more information, see the I/O configuration section.

21.2.4 ACB Clock Frequency Configuration

The ACB module permits software to set the clock frequency used for the ACCESS.bus clock. The clock is set by the ACBCTL2.SCLFRQ field. This field determines the SCL clock period used by this device. This clock low period may be extended by stall periods initiated by the ACB module or by another ACCESS.bus device. In case of a conflict with another bus master, a shorter clock high period may be forced by the other bus master until the conflict is resolved.

21.3 ACCESS.BUS INTERFACE REGISTERS

The ACCESS.bus interface uses the registers listed in Table 49.

Table 49 ACCESS.bus Interface Registers

Name	Address	Description
ACBSDA	FF FEC0h	ACB Serial Data Register
ACBST	FF FEC2h	ACB Status Register
ACBCST	FF FEC4h	ACB Control Status Register
ACBCTL1	FF FEC6h	ACB Control Register 1
ACBCTL2	FF FECAh	ACB Control Register 2
ACBCTL3	FF FECEh	ACB Control Register 3
ACBADDR1	FF FEC8h	ACB Own Address Register 1
ACBADDR2	FF FECCh	ACB Own Address Register 2

21.3.1 ACB Serial Data Register (ACBSDA)

The ACBSDA register is a byte-wide, read/write shift register used to transmit and receive data. The most significant bit is transmitted (received) first and the least significant bit is transmitted (received) last. Reading or writing to the ACBSDA register is allowed when ACBST.SDAST is set; or for repeated starts after setting the START bit. An attempt to access the register in other cases produces unpredictable results.

7							0
DATA							

21.3.2 ACB Status Register (ACBST)

The ACBST register is a byte-wide, read-only register that maintains current ACB status. At reset, and when the module is disabled, ACBST is cleared.

7	6	5	4	3	2	1	0
SLVSTP	SDAST	BER	NEGACK	STASTR	NMATCH	MASTER	XMIT

XMIT — The Direction Bit bit is set when the ACB module is currently in master/slave transmit mode. Otherwise it is cleared.
0 – Receive mode.
1 – Transmit mode.

Obsolete

MASTER — The Master bit indicates that the module is currently in master mode. It is set when a request for bus mastership succeeds. It is cleared upon arbitration loss (BER is set) or the recognition of a Stop Condition.
0 – Slave mode.
1 – Master mode.

NMATCH — The New match bit is set when the address byte following a Start Condition, or repeated starts, causes a match or a global-call match. The NMATCH bit is cleared when written with 1. Writing 0 to NMATCH is ignored. If the ACBCTL1.INTEN bit is set, an interrupt is sent when this bit is set.
0 – No match.
1 – Match or global-call match.

STASTR — The Stall After Start bit is set by the successful completion of an address sending (i.e., a Start Condition sent without a bus error, or negative acknowledge), if the ACBCTL1.STASTRE bit is set. This bit is ignored in slave mode. When the STASTR bit is set, it stalls the bus by pulling down the SCL line, and suspends any other action on the bus (e.g., receives first byte in master receive mode). In addition, if the ACBCTL1.INTEN bit is set, it also sends an interrupt to the ICU. Writing 1 to the STASTR bit clears it. It is also cleared when the module is disabled. Writing 0 to the STASTR bit has no effect.
0 – No stall after start condition.
1 – Stall after successful start.

NEGACK — The Negative Acknowledge bit is set by hardware when a transmission is not acknowledged on the ninth clock. (In this case, the SDAST bit is not set.) Writing 1 to NEGACK clears it. It is also cleared when the module is disabled. Writing 0 to the NEGACK bit is ignored.
0 – No transmission not acknowledged condition.
1 – Transmission not acknowledged.

BER — The Bus Error bit is set by the hardware when a Start or Stop Condition is detected during data transfer (i.e., Start or Stop Condition during the transfer of bits 2 through 8 and acknowledge cycle), or when an arbitration problem is detected. Writing 1 to the BER bit clears it. It is also cleared when the module is disabled. Writing 0 to the BER bit is ignored.
0 – No bus error occurred.
1 – Bus error occurred.

SDAST — The SDA Status bit indicates that the SDA data register is waiting for data (transmit, as master or slave) or holds data that should be read (receive, as master or slave). This bit is cleared when reading from the ACBSDA register during a receive, or when written to during a transmit. When the ACBCTL1.START bit is set, reading the ACBSDA register does not clear the SDAST bit. This enables the ACB to send a repeated start in master receive mode.
0 – ACB module is not waiting for data transfer.
1 – ACB module is waiting for data to be loaded or unloaded.

SLVSTP — The Slave Stop bit indicates that a Stop Condition was detected after a slave transfer (i.e., after a slave transfer in which MATCH or GCMATCH is set). Writing 1 to SLVSTP clears it. It is also cleared when the module is disabled. Writing 0 to SLVSTP is ignored.
0 – No stop condition after slave transfer occurred.
1 – Stop condition after slave transfer occurred.

21.3.3 ACB Control Status Register (ACBCST)

The ACBCST register is a byte-wide, read/write register that maintains current ACB status. At reset and when the module is disabled, the non-reserved bits of ACBCST are cleared.

7	6	5	4	3	2	1	0
Reserved		TGSCL	TSDA	GCMTCH	MATCH	BB	BUSY

BUSY — The BUSY bit indicates that the ACB module is:
- Generating a Start Condition
- In Master mode (ACBST.MASTER is set)
- In Slave mode (ACBCST.MATCH or ACBCST.GCMTCH is set)
- In the period between detecting a Start and completing the reception of the address byte. After this, the ACB either becomes not busy or enters slave mode.

The BUSY bit is cleared by the completion of any of the above states, and by disabling the module. BUSY is a read only bit. It must always be written with 0.
0 – ACB module is not busy.
1 – ACB module is busy.

Obsolete

BB — The Bus Busy bit indicates the bus is busy. It is set when the bus is active (i.e., a low level on either SDA or SCL) or by a Start Condition. It is cleared when the module is disabled, on detection of a Stop Condition, or when writing 1 to this bit. See "Usage Hints" on page 138 for a description of the use of this bit. This bit should be set when either the SDA or SCL signals are low. This is done by sampling the SDA and SCL signals continuously and setting the bit if one of them is low. The bit remains set until cleared by a STOP condition or written with 1.
0 – Bus is not busy.
1 – Bus is busy.

MATCH — The Address Match bit indicates in slave mode when ACBADDR.SAEN is set and the first seven bits of the address byte (the first byte transferred after a Start Condition) matches the 7-bit address in the ACBADDR register, or when ACBADDR2.SAEN is set and the first seven bits of the address byte matches the 7-bit address in the ACBADDR2 register. It is cleared by Start Condition or repeated Start and Stop Condition (including illegal Start or Stop Condition).
0 – No address match occurred.
1 – Address match occurred.

GCMTCH — The Global Call Match bit is set in slave mode when the ACBCTL1.GCMEN bit is set and the address byte (the first byte transferred after a Start Condition) is 00h. It is cleared by a Start Condition or repeated Start and Stop Condition (including illegal Start or Stop Condition).
0 – No global call match occurred.
1 – Global call match occurred.

TSDA — The Test SDA bit samples the state of the SDA signal. This bit can be used while recovering from an error condition in which the SDA signal is constantly pulled low by a slave that went out of sync. This bit is a read-only bit. Data written to it is ignored.

TGSCL — The Toggle SCL bit enables toggling the SCL signal during error recovery. When the SDA signal is low, writing 1 to this bit drives the SCL signal high for one cycle. Writing 1 to TGSCL when the SDA signal is high is ignored. The bit is cleared when the clock toggle is completed.
0 – Writing 0 has no effect.
1 – Writing 1 toggles the SDA signal high for one cycle.

21.3.4 ACB Control Register 1 (ACBCTL1)

The ACBCTL1 register is a byte-wide, read/write register that configures and controls the ACB module. At reset and while the module is disabled (ACBCTL2.ENABLE = 0), the ACBCTL1 register is cleared.

7	6	5	4	3	2	1	0
STASTRE	NMINTE	GCMEN	ACK	Res.	INTEN	STOP	START

START — The Start bit is set to generate a Start Condition on the ACCESS.bus. The START bit is cleared when the Start Condition is sent, or upon detection of a Bus Error (ACBST.BER = 1). This bit should be set only when in Master mode, or when requesting Master mode. If this device is not the active master of the bus (ACBST.MASTER = 0), setting the START bit generates a Start Condition as soon as the ACCESS.bus is free (ACBCST.BB = 0). An address send sequence should then be performed. If this device is the active master of the bus (ACBST.MASTER = 1), when the START bit is set, a write to the ACBSDA register generates a Start Condition, then the ACBSDA data is transmitted as the slave's address and the requested transfer direction. This case is a repeated Start Condition. It may be used to switch the direction of the data flow between the master and the slave, or to choose another slave device without using a Stop Condition in between.
0 – Writing 0 has no effect.
1 – Writing 1 generates a Start condition.

STOP — The Stop bit in master mode generates a Stop Condition that completes or aborts the current message transfer. This bit clears itself after the the Stop condition is issued.
0 – Writing 0 has no effect.
1 – Writing 1 generates a Stop condition.

Obsolete

INTEN — The Interrupt Enable bit controls generating ACB interrupts. When the INTEN bit is cleared ACB interrupt is disabled. When the INTEN bit is set, interrupts are enabled.
0 – ACB interrupts disabled.
1 – ACB interrupts enabled.
An interrupt is generated (the interrupt signal to the ICU is high) on any of the following events:

- An address MATCH is detected (ACBST.NMATCH = 1) and the NMINTE bit is set.
- A Bus Error occurs (ACBST.BERR = 1).
- Negative acknowledge after sending a byte (ACBST.NEGACK = 1).
- An interrupt is generated on acknowledge of each transaction (same as hardware setting the ACBST.SDAST bit).
- If ACBCTL1.STASTRE = 1, in master mode after a successful start (ACBST.STASTR = 1).
- Detection of a Stop Condition while in slave receive mode (ACBST.SLVSTP = 1).

ACK — The Acknowledge bit holds the value this device sends in master or slave mode during the next acknowledge cycle. Setting this bit to 1 instructs the transmitting device to stop sending data, since the receiver either does not need, or cannot receive, any more data. This bit is cleared after the first acknowledge cycle. This bit is ignored when in transmit mode.

GCMEN — The Global Call Match Enable bit enables the match of an incoming address byte to the general call address (Start Condition followed by address byte of 00h) while the ACB is in slave mode. When cleared, the ACB does not respond to a global call.
0 – Global call matching disabled.
1 – Global call matching enabled.

NMINTE — The New Match Interrupt Enable controls whether ACB interrupts are generated on new matches. Set the NMINTE bit to enable the interrupt on a new match (i.e., when ACBST.NMATCH is set). The interrupt is issued only if the ACBCTL1.INTEN bit is set.
0 – New match interrupts disabled.
1 – New match interrupts enabled.

STASTRE — The Stall After Start Enable bit enables the stall after start mechanism. When enabled, the ACB is stalled after the address byte. When the STASTRE bit is clear, the ACBST.STASTR bit is always clear.
0 – No stall after start.
1 – Stall-after-start enabled.

21.3.5 ACB Control Register 2 (ACBCTL2)

The ACBCTL2 register is a byte-wide, read/write register that controls the module and selects the ACB clock rate. At reset, the ACBCTL2 register is cleared.

7 … 1	0
SCLFRQ6:0	ENABLE

ENABLE — The Enable bit controls the ACB module. When this bit is set, the ACB module is enabled. When the Enable bit is clear, the ACB module is disabled, the ACBCTL1, ACBST, and ACBCST registers are cleared, and the clocks are halted.
0 – ACB module disabled.
1 – ACB module enabled.

SCLFRQ — The SCL Frequency field specifies the SCL period (low time and high time) in master mode. The clock low time and high time are defined as follows:
$t_{SCLl} = t_{SCLh} = 2 \times SCLFRQ \times t_{CLK}$
Where t_{CLK} is this device's clock period when in Active mode. The SCLFRQ field may be programmed to values in the range of 0001000b through 1111111b. Using any other value has unpredictable results.

21.3.6 ACB Control Register 3 (ACBCTL3)

The ACBCTL3 register is a byte-wide, read/write register that expands the clock prescaler field and enables ARP matches. At reset, the ACBCTL3 register is cleared.

7 … 3	2	1 … 0
Reserved	ARPMEN	SCLFRQ8:7

ARPMEN — The ARP Match Enable bit enables the matching of an incoming address byte to the SMBus ARP address 110 0001b general call address (Start condition followed by address byte of 00h), while the ACB is in slave mode.
0 – ACB does not respond to ARP addresses.
1 – ARP address matching enabled.

SCLFRQ — The SCL Frequency field specifies the SCL period (low time and high time) in master mode. The ACBCTL3 register provides a 2-bit expansion of this field, with the remaining 7 bits being held in the ACBCTL2 register.

Obsolete

21.3.7 ACB Own Address Register 1 (ACBADDR1)

The ACBADDR1 register is a byte-wide, read/write register that holds the module's first ACCESS.bus address. After reset, its value is undefined.

7	6 … 0
SAEN	ADDR

ADDR — The Own Address field holds the first 7-bit ACCESS.bus address of this device. When in slave mode, the first 7 bits received after a Start Condition are compared to this field (first bit received to bit 6, and the last to bit 0). If the address field matches the received data and the SAEN bit is set, a match is detected.

SAEN — The Slave Address Enable bit controls whether address matching is performed in slave mode. When set, the SAEN bit indicates that the ADDR field holds a valid address and enables the match of ADDR to an incoming address byte. When cleared, the ACB does not check for an address match.
0 – Address matching disabled.
1 – Address matching enabled.

21.3.8 ACB Own Address Register 2 (ACBADDR2)

The ACBADDR2 register is a byte-wide, read/write register that holds the module's second ACCESS.bus address. After reset, its value is undefined.

7	6 … 0
SAEN	ADDR

ADDR — The Own Address field holds the second 7-bit ACCESS.bus address of this device. When in slave mode, the first 7 bits received after a Start Condition are compared to this field (first bit received to bit 6, and the last to bit 0). If the address field matches the received data and the SAEN bit is set, a match is detected.

SAEN — The Slave Address Enable bit controls whether address matching is performed in slave mode. When set, the SAEN bit indicates that the ADDR field holds a valid address and enables the match of ADDR to an incoming address byte. When cleared, the ACB does not check for an address match.
0 – Address matching disabled.
1 – Address matching enabled.

21.4 USAGE HINTS

- When the ACB module is disabled, the ACBCST.BB bit is cleared. After enabling the ACB (ACBCTL2.ENABLE = 1) in systems with more than one master, the bus may be in the middle of a transaction with another device, which is not reflected in the BB bit. There is a need to allow the ACB to synchronize to the bus activity status before issuing a request to become the bus master, to prevent bus errors. Therefore, before issuing a request to become the bus master for the first time, software should check that there is no activity on the bus by checking the BB bit after the bus allowed time-out period.
- When waking up from power down, before checking the ACBCST.MATCH bit, test the ACBCST.BUSY bit to make sure that the address transaction has finished.
- The BB bit is intended to solve a deadlock in which two, or more, devices detect a usage conflict on the bus and both devices cease being bus masters at the same time. In this situation, the BB bits of both devices are active (because each deduces that there is another master currently performing a transaction, while in fact no device is executing a transaction), and the bus would stay locked until some device sends a ACBCTL1.STOP condition. The ACBCST.BB bit allows software to monitor bus usage, so it can avoid sending a STOP signal in the middle of the transaction of some other device on the bus. This bit detects whether the bus remains unused over a certain period, while the BB bit is set.
- In some cases, the bus may get stuck with the SCL or SDA lines active. A possible cause is an erroneous Start or Stop Condition that occurs in the middle of a slave receive session. When the SCL signal is stuck active, there is nothing that can be done, and it is the responsibility of the module that holds the bus to release it. When the SDA signal is stuck active, the ACB module enables the release of the bus by using the following sequence. Note that in normal cases, the SCL signal may be toggled only by the bus master. This protocol is a recovery scheme which is an exception that should be used only in the case when there is no other master on the bus. The recovery scheme is as follows:
  1. Disable and re-enable the module to set it into the not addressed slave mode.
  2. Set the ACBCTL1.START bit to make an attempt to issue a Start Condition.
  3. Check if the SDA signal is active (low) by reading ACBCST.TSDA bit. If it is active, issue a single SCL cycle by writing 1 to ACBCST.TGSCL bit. If the SDA line is not active, continue from step 5.
  4. Check if the ACBST.MASTER bit is set, which indicates that the Start Condition was sent. If not, repeat step 3 and 4 until the SDA signal is released.
  5. Clear the BB bit. This enables the START bit to be executed. Continue according to "Bus Idle Error Recovery" on page 133.

© National

22.0 Timing and Watchdog Module

The Timing and Watchdog Module (TWM) generates the clocks and interrupts used for timing periodic functions in the system; it also provides Watchdog protection over software execution.

The TWM is designed to provide flexibility in system design by configuring various clock ratios and by selecting the Watchdog clock source. After setting the TWM configuration, software can lock it for a higher level of protection against erroneous software action. Once the TWM is locked, only reset can release it.

22.1 TWM STRUCTURE

Figure 60 is a block diagram showing the internal structure of the Timing and Watchdog module. There are two main sections: the Real-Time Timer (T0) section at the top and the Watchdog section on the bottom.

All counting activities of the module are based on the Slow Clock (SLCLK). A prescaler counter divides this clock to make a slower clock. The prescaler factor is defined by a 3-bit field in the Timer and Watchdog Prescaler register, which selects either 1, 2, 4, 8, 16, or 32 as the divisor. Therefore, the prescaled clock period can be 2, 4, 8, 16, or 32 times the Slow Clock period. The prescaled clock signal is called T0IN.

22.2 TIMER T0 OPERATION

Timer T0 is a programmable 16-bit down counter that can be used as the time base for real-time operations such as a periodic audible tick. It can also be used to drive the Watchdog circuit.

The timer starts counting from the value loaded into the TWMT0 register and counts down on each rising edge of T0IN. When the timer reaches zero, it is automatically reloaded from the TWMT0 register and continues counting down from that value. Therefore, the frequency of the timer is:

f_{SLCLK} / [(TWMT0 + 1) × prescaler]

When an external crystal oscillator is used as the SLCLK source or when the fast clock is divided accordingly, f_{SLCLK} is 32.768 kHz.

The value stored in TWMT0 can range from 0001h to FFFFh.

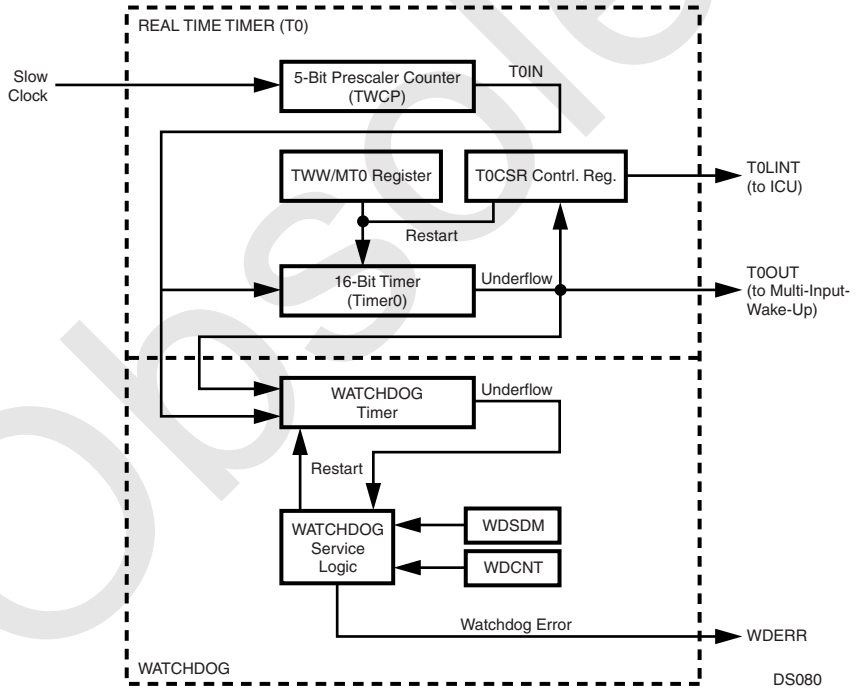

Figure 60. Timing and Watchdog Module Block Diagram

When the counter reaches zero, an internal timer signal called T0OUT is set for one T0IN clock cycle. This signal sets the TC bit in the TWMT0 Control and Status Register (T0CSR). It also generates an interrupt (IRQ14), when enabled by the T0CSR.T0INTE bit. T0OUT is also an input to the MIWU (see Section 13.0), so an edge-triggered interrupt is also available through this alternative mechanism.

If software loads the TWMT0 register with a new value, the timer uses that value the next time that it reloads the 16-bit timer register (in other words, after reaching zero). Software can restart the timer at any time (on the very next edge of the T0IN clock) by setting the Restart (RST) bit in the T0CSR register. The T0CSR.RST bit is cleared automatically upon restart of the 16-bit timer.

Note: If software wishes to switch to Power Save or Idle mode after setting the T0CSR.RST bit, software must wait for the reset operation to complete before performing the switch.

Obsolete

22.3 WATCHDOG OPERATION

The Watchdog is an 8-bit down counter that operates on the rising edge of a specified clock source. At reset, the Watchdog is disabled; it does not count and no Watchdog signal is generated. A write to either the Watchdog Count (WDCNT) register or the Watchdog Service Data Match (WDSDM) register starts the counter. The Watchdog counter counts down from the value programmed in the WDCNT register. Once started, only a reset can stop the Watchdog from operating.

The Watchdog can be programmed to use either T0OUT or T0IN as its clock source (the output and input of Timer T0, respectively). The TWCFG.WDCT0I bit controls this clock selection.

Software must periodically "service" the Watchdog. There are two ways to service the Watchdog, the choice depending on the programmed value of the WDSDME bit in the Timer and Watchdog Configuration (TWCFG) register.

If the TWCFG.WDSDME bit is clear, the Watchdog is serviced by writing a value to the WDCNT register. The value written to the register is reloaded into the Watchdog counter. The counter then continues counting down from that value.

If the TWCFG.WDSDME bit is set, the Watchdog is serviced by writing the value 5Ch to the Watchdog Service Data Match (WDSDM) register. This reloads the Watchdog counter with the value previously programmed into the WDCNT register. The counter then continues counting down from that value.

A Watchdog error signal is generated by any of the following events:

- The Watchdog serviced too late.
- The Watchdog serviced too often.
- The WDSDM register is written with a value other than 5Ch when WDSDM type servicing is enabled (TWCFG.WDSDME = 1).

A Watchdog error condition resets the device.

22.3.1 Register Locking

The Timer and Watchdog Configuration (TWCFG) register is used to set the Watchdog configuration. It controls the Watchdog clock source (T0IN or T0OUT), the type of Watchdog servicing (using WDCNT or WDSDM), and the locking state of the TWCFG, TWCPR, TIMER0, T0CSR, and WDCNT registers. A register that is locked cannot be read or written. A write operation is ignored and a read operation returns unpredictable results.

If the TWCFG register is itself locked, it remains locked until the device is reset. Any other locked registers also remain locked until the device is reset. This feature prevents a runaway program from tampering with the programmed Watchdog function.

22.3.2 Power Save Mode Operation

The Timer and Watchdog Module is active in both the Power Save and Idle modes. The clocks and counters continue to operate normally in these modes. The WDSDM register is accessible in the Power Save and Idle modes, but the other TWM registers are accessible only in the Active mode. Therefore, Watchdog servicing must be carried out using the WDSDM register in the Power Save or Idle mode.

In the Halt mode, the entire device is frozen, including the Timer and Watchdog Module. On return to Active mode, operation of the module resumes at the point at which it was stopped.

Note: After a restart or Watchdog service through WDCNT, do not enter Power Save mode for a period equivalent to 5 Slow Clock cycles.

22.4 TWM REGISTERS

The TWM registers controls the operation of the Timing and Watchdog Module. There are six such registers:

Table 50 TWM Registers

Name	Address	Description
TWCFG	FF FF20h	Timer and Watchdog Configuration Register
TWCP	FF FF22h	Timer and Watchdog Clock Prescaler Register
TWMT0	FF FF24h	TWM Timer 0 Register
T0CSR	FF FF26h	TWMT0 Control and Status Register
WDCNT	FF FF28h	Watchdog Count Register
WDSDM	FF FF2Ah	Watchdog Service Data Match Register

The WDSDM register is accessible in both Active and Power Save mode. The other TWM registers are accessible only in Active mode.

Obsolete

22.4.1 Timer and Watchdog Configuration Register (TWCFG)

The TWCFG register is a byte-wide, read/write register that selects the Watchdog clock input and service method, and also allows the Watchdog registers to be selectively locked. A locked register cannot be read or written; a read operation returns unpredictable values and a write operation is ignored. Once a lock bit is set, that bit cannot be cleared until the device is reset. At reset, the non-reserved bits of the register are cleared. The register format is shown below.

7 6	5	4	3	2	1	0
Res.	WDSDME	WDCT0I	LWDCNT	LTWMT0	LTWCP	LTWCFG

LTWCFG The Lock TWCFG Register bit controls access to the TWCFG register. When clear, access to the TWCFG register is allowed. When set, the TWCFG register is locked.
0 – TWCFG register unlocked.
1 – TWCFG register locked.

LTWCP The Lock TWCP Register bit controls access to the TWCP register. When clear, access to the TWCP register is allowed. When set, the TWCP register is locked.
0 – TWCP register unlocked.
1 – TWCP register locked.

LTWMT0 The Lock TWMT0 Register bit controls access to the TWMT0 register. When clear, access to the TWMT0 and T0CSR registers are allowed. When set, the TWMT0 and T0CSR registers are locked.
0 – TWMT0 register unlocked.
1 – TWMT0 register locked.

LWDCNT The Lock LDWCNT Register bit controls access to the LDWCNT register. When clear, access to the LDWCNT register is allowed. When set, the LDWCNT register is locked.
0 – LDWCNT register unlocked.
1 – LDWCNT register locked.

WDCT0I The Watchdog Clock from T0IN bit selects the clock source for the Watchdog timer. When clear, the T0OUT signal (the output of Timer T0) is used as the Watchdog clock. When set, the T0IN signal (the prescaled Slow Clock) is used as the Watchdog clock.
0 – Watchdog timer is clocked by T0OUT.
1 – Watchdog timer is clocked by T0IN.

WDSDME The Watchdog Service Data Match Enable bit controls which method is used to service the Watchdog timer. When clear, Watchdog servicing is accomplished by writing a count value to the WDCNT register; write operations to the Watchdog Service Data Match (WDSDM) register are ignored. When set, Watchdog servicing is accomplished by writing the value 5Ch to the WDSDM register.
0 – Write a count value to the WDCNT register to service the Watchdog timer.
1 – Write 5Ch to the WDSDM register to service the Watchdog timer.

22.4.2 Timer and Watchdog Clock Prescaler Register (TWCP)

The TWCP register is a byte-wide, read/write register that specifies the prescaler value used for dividing the low-frequency clock to generate the T0IN clock. At reset, the non-reserved bits of the register are cleared. The register format is shown below.

7 3	2 0
Reserved	MDIV

MDIV Main Clock Divide. This 3-bit field defines the prescaler factor used for dividing the low speed device clock to create the T0IN clock. The allowed 3-bit values and the corresponding clock divisors and clock rates are listed below.

MDIV	Clock Divisor (f_{SCLK} = 32.768 kHz)	T0IN Frequency
000	1	32.768 kHz
001	2	16.384 kHz
010	4	8.192 kHz
011	8	4.096 kHz
100	16	2.056 kHz
101	32	1.024 kHz
Other	Reserved	N/A

22.4.3 TWM Timer 0 Register (TWMT0)

The TWMT0 register is a word-wide, read/write register that defines the T0OUT interrupt rate. At reset, TWMT0 register is initialized to FFFFh. The register format is shown below.

15 0
PRESET

PRESET The Timer T0 Preset field holds the value used to reload Timer T0 on each underflow. Therefore, the frequency of the Timer T0 interrupt is the frequency of T0IN divided by (PRESET+1). The allowed values of PRESET are 0001h through FFFFh.

Obsolete

22.4.4 TWMT0 Control and Status Register (T0CSR)

The T0CSR register is a byte-wide, read/write register that controls Timer T0 and shows its current status. At reset, the non-reserved bits of the register are cleared. The register format is shown below.

7 – 5	4	3	2	1	0
Reserved	FRZT0E	WDLTD	T0INTE	TC	RST

RST — The Restart bit is used to reset Timer T0. When this bit is set, it forces the timer to reload the value in the TWMT0 register on the next rising edge of the selected input clock. The RST bit is reset automatically by the hardware on the same rising edge of the selected input clock. Writing a 0 to this bit position has no effect. At reset, the non-reserved bits of the register are cleared.
0 – Writing 0 has no effect.
1 – Writing 1 resets Timer T0.

TC — The Terminal Count bit is set by hardware when the Timer T0 count reaches zero and is cleared when software reads the T0CSR register. It is a read-only bit. Any data written to this bit position is ignored. The TC bit is not cleared if FREEZE mode is asserted by an external debugging system.
0 – Timer T0 did not count down to 0.
1 – Timer T0 counted down to 0.

T0INTE — The Timer T0 Interrupt Enable bit enables an interrupt to the CPU each time the Timer T0 count reaches zero. When this bit is clear, Timer T0 interrupts are disabled.
0 – Timer T0 interrupts disabled.
1 – Timer T0 interrupts enabled.

WDLTD — The Watchdog Last Touch Delay bit is set when either WDCNT or WDSDM is written and the data transfer to the Watchdog is in progress (see WDCNT and WDSDM register description). When clear, it is safe to switch to Power Save mode.
0 – No data transfer to the Watchdog is in progress, safe to enter Power Save mode.
1 – Data transfer to the Watchdog in progress.

FRZT0E — The Freeze Timer0 Enable bit controls whether TImer 0 is stopped in FREEZE mode. If this bit is set, the Timer 0 is frozen (stopped) when the FREEZE input to the TWM is asserted. If the FRZT0E bit is clear, only the Watchdog timer is frozen by asserting the FREEZE input signal. After reset, this bit is clear.
0 – Timer T0 unaffected by FREEZE mode.
1 – Timer T0 stopped in FREEZE mode.

22.4.5 Watchdog Count Register (WDCNT)

The WDCNT register is a byte-wide, write-only register that holds the value that is loaded into the Watchdog counter each time the Watchdog is serviced. The Watchdog is started by the first write to this register. Each successive write to this register restarts the Watchdog count with the written value. At reset, this register is initialized to 0Fh.

7 – 0
PRESET

22.4.6 Watchdog Service Data Match Register (WDSDM)

The WSDSM register is a byte-wide, write-only register used for servicing the Watchdog. When this type of servicing is enabled (TWCFG.WDSDME = 1), the Watchdog is serviced by writing the value 5Ch to the WSDSM register. Each such servicing reloads the Watchdog counter with the value previously written to the WDCNT register. Writing any data other than 5Ch triggers a Watchdog error. Writing to the register more than once in one Watchdog clock cycle also triggers a Watchdog error signal. If this type of servicing is disabled (TWCFG.WDSDME = 0), any write to the WSDSM register is ignored.

7 – 0
RSTDATA

22.5 WATCHDOG PROGRAMMING PROCEDURE

The highest level of protection against software errors is achieved by programming and then locking the Watchdog registers and using the WDSDM register for servicing. This is the procedure:

1. Write the desired values into the TWM Clock Prescaler register (TWCP) and the TWM Timer 0 register (TWMT0) to control the T0IN and T0OUT clock rates. The frequency of T0IN can be programmed to any of six frequencies ranging from 1/32 × f_{SLCLK} to f_{SLCLK}. The frequency of T0OUT is equal to the frequency of T0IN divided by (1+ PRESET), in which PRESET is the value written to the TWMT0 register.
2. Configure the Watchdog clock to use either T0IN or T0OUT by setting or clearing the TWCFG.WDCT0I bit.
3. Write the initial value into the WDCNT register. This starts operation of the Watchdog and specifies the maximum allowed number of Watchdog clock cycles between service operations.
4. Set the T0CSR.RST bit to restart the TWMT0 timer.
5. Lock the Watchdog registers and enable the Watchdog Service Data Match Enable function by setting bits 0, 1, 2, 3, and 5 in the TWCFG register.
6. Service the Watchdog by periodically writing the value 5Ch to the WDSDM register at an appropriate rate. Servicing must occur at least once per period programmed into the WDCNT register, but no more than once in a single Watchdog input clock cycle.

Obsolete

23.0 Multi-Function Timer

The Multi-Function Timer module contains a pair of 16-bit timer/counters. Each timer/counter unit offers a choice of clock sources for operation and can be configured to operate in any of the following modes:

- Processor-Independent Pulse Width Modulation (PWM) mode, which generates pulses of a specified width and duty cycle, and which also provides a general-purpose timer/counter.
- Input Capture mode, which measures the elapsed time between occurrences of external events, and which also provides a general-purpose timer/counter.
- Dual Independent Timer mode, which generates system timing signals.

The timer unit uses an I/O pin called TA, which is an alternate function of the PI7 port pin.

23.1 TIMER STRUCTURE

Figure 61 is a block diagram showing the internal structure of the MFT. There are two main functional blocks: a Timer/Counter and Action block and a Clock Source block. The Timer/Counter and Action block contains two separate timer/counter units, called Timer/Counter 1 and Timer/Counter 2.

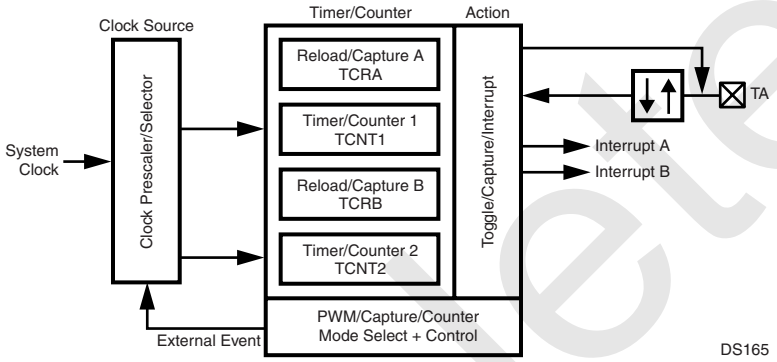

Figure 61. Multi-Function Timer Block Diagram

23.1.1 Timer/Counter Block

The Timer/Counter block contains the following functional blocks:

- Two 16-bit counters, Timer/Counter 1 (TCNT1) and Timer/Counter 2 (TCNT2)
- Two 16-bit reload/capture registers, TCRA and TCRB
- Control logic necessary to configure the timer to operate in any of the four operating modes
- Interrupt control and I/O control logic

In a power-saving mode that uses the low-frequency (32.768 kHz) clock as the System Clock, the synchronization circuit requires that the Slow Clock operate at no more than one-fourth the speed of the 32.768 kHz System Clock.

23.1.2 Clock Source Block

The Clock Source block generates the signals used to clock the two timer/counter registers. The internal structure of the Clock Source block is shown in Figure 62.

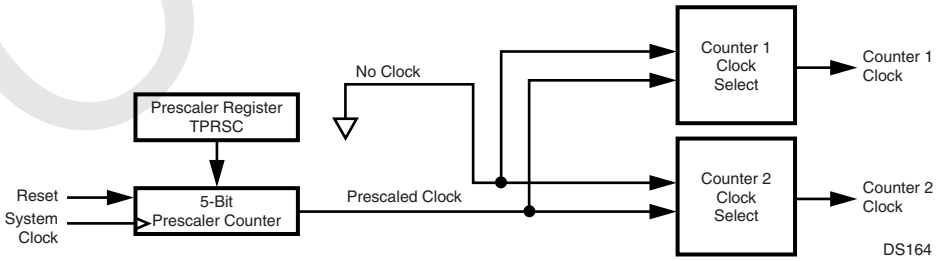

Figure 62. Multi-Function Timer Clock Source

Obsolete

Counter Clock Source Select

There are two clock source selectors that allow software to independently select the clock source for each of the two 16-bit counters from any one of the following sources:

- No clock (which stops the counter)
- Prescaled System Clock
- Slow Clock (derived from the low-frequency oscillator or divided from the high-speed oscillator)

Prescaler

The 5-bit clock prescaler allows software to run the timer with a prescaled clock signal. The prescaler consists of a 5-bit read/write prescaler register (TPRSC) and a 5-bit down counter. The System Clock is divided by the value contained in the prescaler register plus 1. Therefore, the timer clock period can be set to any value from 1 to 32 divisions of the System Clock period. The prescaler register and down counter are both cleared upon reset.

Slow Clock

The Slow Clock is generated by the Triple Clock and Reset module. The clock source is either the divided fast clock or the external 32.768 kHz crystal oscillator (if available and selected). The Slow Clock can be used as the clock source for the two 16-bit counters. Because the Slow Clock can be asynchronous to the System Clock, a circuit is provided to synchronize the clock signal to the high-frequency System Clock before it is used for clocking the counters. The synchronization circuit requires that the Slow Clock operate at no more than one-fourth the speed of the System Clock.

Limitations in Low-Power Modes

The Power Save mode uses the Slow Clock as the System Clock. In this mode, the Slow Clock cannot be used as a clock source for the timers because that would drive both clocks at the same frequency, and the clock ratio needed for synchronization to the System Clock would not be maintained. However, the External Event Clock and Pulse Accumulate Mode will still work, as long as the external event pulses are at least the size of the whole slow-clock period. Using the prescaled System Clock will also work, but at a much slower rate than the original System Clock.

Idle and Halt modes stop the System Clock (the high-frequency and/or low-frequency clock) completely. If the System Clock is stopped, the timer stops counting until the System Clock resumes operation.

In the Idle or Halt mode, the System Clock stops completely, which stops the operation of the timers. In that case, the timers stop counting until the System Clock resumes operation.

23.2 TIMER OPERATING MODES

Each timer/counter unit can be configured to operate in any of the following modes:

- Processor-Independent Pulse Width Modulation (PWM) mode
- Input Capture mode
- Dual Independent Timer mode

At reset, the timers are disabled. To configure and start the timers, software must write a set of values to the registers that control the timers. The registers are described in Section 23.5.

Obsolete

23.2.1 Mode 1: Processor-Independent PWM

Mode 1 is the Processor-Independent Pulse Width Modulation (PWM) mode, which generates pulses of a specified width and duty cycle, and which also provides a separate general-purpose timer/counter.

Figure 63 is a block diagram of the Multi-Function Timer configured to operate in Mode 1. Timer/Counter 1 (TCNT1) functions as the time base for the PWM timer. It counts down at the clock rate selected for the counter. When an underflow occurs, the timer register is reloaded alternately from the TCRA and TCRB registers, and counting proceeds downward from the loaded value.

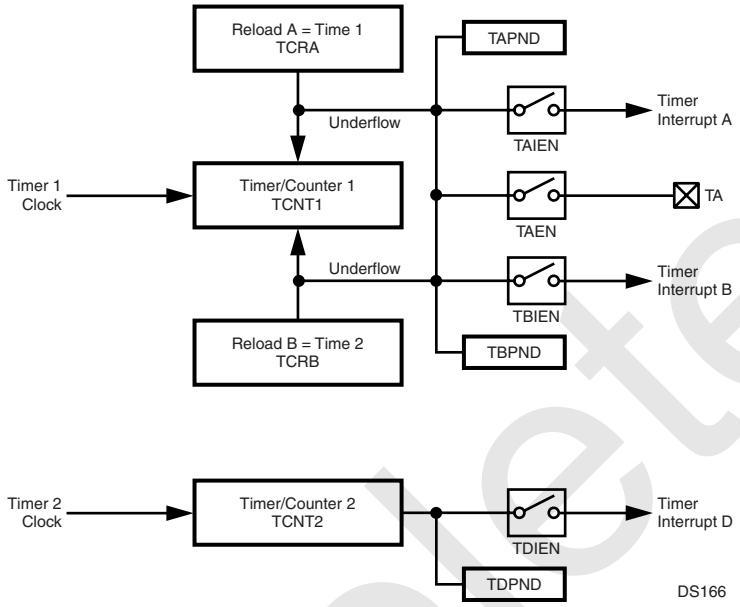

Figure 63. Processor-Independent PWM Mode

On the first underflow, the timer is loaded from the TCRA register, then from the TCRB register on the next underflow, then from the TCRA register again on the next underflow, and so on. Every time the counter is stopped and restarted, it always obtains its first reload value from the TCRA register. This is true whether the timer is restarted upon reset, after entering Mode 1 from another mode, or after stopping and restarting the clock with the Timer/Counter 1 clock selector.

The timer can be configured to toggle the TA output bit on each underflow. This generates a clock signal on the TA output with the width and duty cycle determined by the values stored in the TCRA and TCRB registers. This is a “processor-independent” PWM clock because once the timer is set up, no more action is required from the CPU to generate a continuous PWM signal.

The timer can be configured to generate separate interrupts upon reload from the TCRA and TCRB registers. The interrupts can be enabled or disabled under software control. The CPU can determine the cause of each interrupt by looking at the TAPND and TBPND bits, which are updated by the hardware on each occurrence of a timer reload.

In Mode 1, Timer/Counter 2 (TCNT2) can be used either as a simple system timer, an external event counter, or a pulse-accumulate counter. The clock counts down using the clock selected with the Timer/Counter 2 clock selector. It generates an interrupt upon each underflow if the interrupt is enabled with the TDIEN bit.

Obsolete

23.2.2 Mode 2: Input Capture

Mode 2 is the Input Capture mode, which measures the elapsed time between occurrences of external events, and which also provides a separate general-purpose timer/counter.

Figure 64 is a block diagram of the Multi-Function Timer configured to operate in Mode 2. The time base of the capture timer depends on Timer/Counter 1, which counts down using the clock selected with the Timer/Counter 1 clock selector. The TA pin functions as a capture input. A transition received on the TA pin transfers the timer contents to the TCRA register. The TA pin can be configured to sense either rising or falling edges.

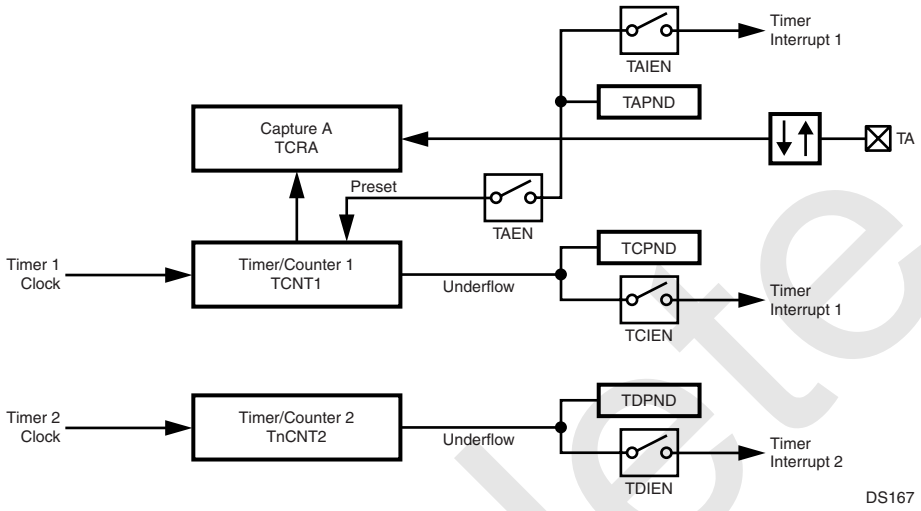

Figure 64. Input Capture Mode

The TA input can be configured to preset the counter to FFFFh on reception of a valid capture event. In this case, the current value of the counter is transferred to the corresponding capture register and then the counter is preset to FFFFh. Using this approach allows software to determine the on-time and off-time and period of an external signal with a minimum of CPU overhead.

The values captured in the TCRA register at different times reflect the elapsed time between transitions on the TA pin. The input signal on the TA pin must have a pulse width equal to or greater than one System Clock cycle.

There are two separate interrupts associated with the capture timer, each with its own enable bit and pending bit. The interrupt events are reception of a transition on the TA pin and underflow of the TCNT1 counter. The enable bits for these events are TAIEN and TCIEN, respectively.

In Mode 2, Timer/Counter 2 (TCNT2) can be used as a simple system timer. The clock counts down using the clock selected with the Timer/Counter 2 clock selector. It generates an interrupt upon each underflow if the interrupt is enabled with the TDIEN bit.

Obsolete

23.2.3 Mode 3: Dual Independent Timer/Counter

Mode 3 is the Dual Independent Timer mode, which generates system timing signals or counts occurrences of external events.

Figure 65 is a block diagram of the Multi-Function Timer configured to operate in Mode 3. The timer is configured to operate as a dual independent system timer or dual external event counter. In addition, Timer/Counter 1 can generate a 50% duty cycle PWM signal on the TA pin.

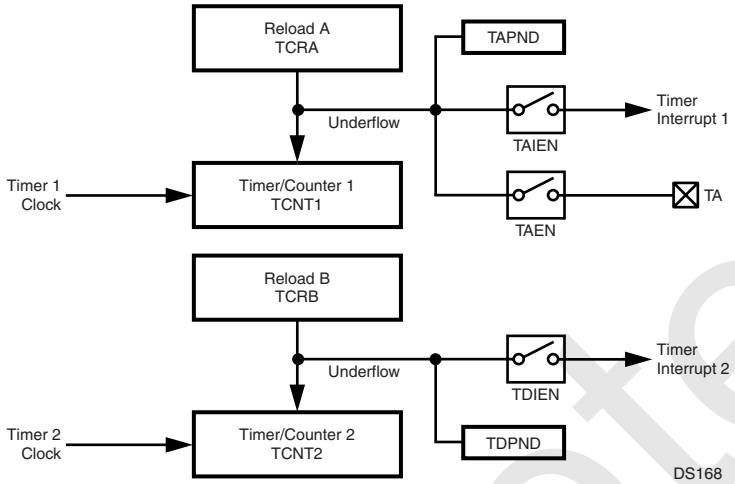

Figure 65. Dual-Independent Timer/Counter Mode

Timer/Counter 1 (TCNT1) counts down at the rate of the selected clock. On underflow, it is reloaded from the TCRA register and counting proceeds down from the reloaded value. In addition, the TA pin is toggled on each underflow if this function is enabled by the TAEN bit. The initial state of the TA pin is software-programmable. When the TA pin is toggled from low to high, it sets the TCPND interrupt pending bit and also generates an interrupt if enabled by the TAIEN bit.

Because the TA pin toggles on every underflow, a 50% duty cycle PWM signal can be generated on the TA pin without any further action from the CPU.

Timer/Counter 2 (TCNT2) counts down at the rate of the selected clock. On underflow, it is reloaded from the TCRB register and counting proceeds down from the reloaded value. In addition, each underflow sets the TDPND interrupt pending bit and generates an interrupt if the interrupt is enabled by the TDIEN bit.

Obsolete

23.3 TIMER INTERRUPTS

Each Multi-Function Timer unit has four interrupt sources, designated A, B, C, and D. Interrupt sources A, B, and C are mapped into a single system interrupt called Timer Interrupt 1, while interrupt source D is mapped into a system interrupt called Timer Interrupt 2. Each of the four interrupt sources has its own enable bit and pending bit. The enable bits are named TAIEN, TBIEN, TCIEN, and TDIEN. The pending bits are named TAPND, TBPND, TCPND, and TDPND.

Timer Interrupts 1 and 2 are system interrupts TA and TB (IRQ14 and IRQ13), respectively.

Table 51 shows the events that trigger interrupts A, B, C, and D in each of the four operating modes. Note that some interrupt sources are not used in some operating modes.

23.4 TIMER I/O FUNCTIONS

Table 52 shows the functions of the TA pin in each operating mode, and for each combination of enable bit settings.

When the TA pin is configured to operate as a PWM output (TAEN = 1), the state of the pin is toggled on each underflow of the TCNT1 counter. In this case, the initial value on the pin is determined by the TAOUT bit. For example, to start with TA high, software must set the TAOUT bit before enabling the timer clock. This option is available only when the timer is configured to operate in Mode 1 or 3 (in other words, when TCRA is not used in Capture mode).

Table 51 Timer Interrupts Overview

Sys. Int.	Interrupt Pending Bit	Mode 1	Mode 2	Mode 3
		PWM + Counter	Dual Input Capture + Counter	Dual Counter
Timer Int. 1 (TA Int.)	TAPND	TCNT1 reload from TCRA	Input capture on TA transition	TCNT1 reload from TCRA
	TBPND	TCNT1 reload from TCRB	Input Capture on TB transition	N/A
	TCPND	N/A	TCNT1 underflow	N/A
Timer Int. 2 (TB Int.)	TDPND	TCNT2 underflow	TCNT2 underflow	TCNT2 reload from TCRB

Table 52 Timer I/O Functions

I/O	TAEN TBEN	Mode 1	Mode 2	Mode 3
		PWM + Counter	Dual Input Capture + counter	Dual Counter
TA	TAEN = 0 TBEN = X	No Output	Capture TCNT1 into TCRA	No Output Toggle
	TAEN = 1 TBEN = X	Toggle Output on Underflow of TCNT1	Capture TCNT1 into TCRA and Preset TCNT1	Toggle Output on Underflow of TCNT1

Obsolete

23.5 TIMER REGISTERS

Table 53 lists the CPU-accessible registers used to control the Multi-Function Timers.

Table 53 Multi-Function Timer Registers

Name	Address	Description
TPRSC	FF FF48h	Clock Prescaler Register
TCKC	FF FF4Ah	Clock Unit Control Register
TCNT1	FF FF40h	Timer/Counter 1 Register
TCNT2	FF FF46h	Timer/Counter 2 Register
TCRA	FF FF42h	Reload/Capture A Register
TCRB	FF FF44h	Reload/Capture B Register
TCTRL	FF FF4Ch	Timer Mode Control Register
TICTL	FF FF4Eh	Timer Interrupt Control Register
TICLR	FF FF50h	Timer Interrupt Clear Register

23.5.1 Clock Prescaler Register (TPRSC)

The TPRSC register is a byte-wide, read/write register that holds the current value of the 5-bit clock prescaler (CLKPS). This register is cleared on reset. The register format is shown below.

7 – 5	4 – 0
Reserved	CLKPS

CLKPS The Clock Prescaler field specifies the divisor used to generate the Timer Clock from the System Clock. When the timer is configured to use the prescaled clock, the System Clock is divided by (CLKPS + 1) to produce the timer clock. Therefore, the System Clock divisor can range from 1 to 32.

23.5.2 Clock Unit Control Register (TCKC)

The TCKC register is a byte-wide, read/write register that selects the clock source for each timer/counter. Selecting the clock source also starts the counter. This register is cleared on reset, which disables the timer/counters. The register format is shown below.

7 – 6	5 – 3	2 – 0
Reserved	C2CSEL	C1CSEL

C1CSEL The Counter 1 Clock Select field specifies the clock mode for Timer/Counter 1 as follows:
- 000 – No clock (Timer/Counter 1 stopped, modes 1, 2, and 3 only).
- 001 – Prescaled System Clock.
- 010 – Reserved.
- 011 – Reserved.
- 100 – Slow Clock.*
- 101 – Reserved.
- 110 – Reserved.
- 111 – Reserved.

C2CSEL The Counter 2 Clock Select field specifies the clock mode for Timer/Counter 2 as follows:
- 000 – No clock (Timer/Counter 2 stopped, modes 1, 2, and 3 only).
- 001 – Prescaled System Clock.
- 010 – Reserved.
- 011 – Reserved.
- 100 – Slow Clock*
- 101 – Reserved.
- 110 – Reserved.
- 111 – Reserved.

* Operation of the Slow Clock is determined by the CRCTRL.SCLK control bit, as described in Section 11.8.1.

23.5.3 Timer/Counter 1 Register (TCNT1)

The TCNT1 register is a word-wide, read/write register that holds the current count value for Timer/Counter 1. The register contents are not affected by a reset and are unknown after power-up.

15 – 0
TCNT1

23.5.4 Timer/Counter 2 Register (TCNT2)

The TCNT2 register is a word-wide, read/write register that holds the current count value for Timer/Counter 2. The register contents are not affected by a reset and are unknown after power-up.

15 – 0
TCNT2

Obsolete

23.5.5 Reload/Capture A Register (TCRA)

The TCRA register is a word-wide, read/write register that holds the reload or capture value for Timer/Counter 1. The register contents are not affected by a reset and are unknown after power-up.

15	0
TCRA	

23.5.6 Reload B Register (TCRB)

The TCRB register is a word-wide, read/write register that holds the reload value for Timer/Counter 2. The register contents are not affected by a reset and are unknown after power-up.

15	0
TCRB	

23.5.7 Timer Mode Control Register (TCTRL)

The TCTRL register is a byte-wide, read/write register that sets the operating mode of the timer/counter and the TA pin. This register is cleared at reset. The register format is shown below.

7	6	5	4	3	2	1	0
TEN	TAOUT	Res.	TAEN	Res.	TAEDG	MDSEL	

MDSEL The Mode Select field sets the operating mode of the timer/counter as follows:
00 – Mode 1: PWM plus system timer.
01 – Mode 2: Input Capture plus system timer.
10 – Mode 3: Dual Timer/Counter.
11 – Reserved.

TAEDG The TA Edge Polarity bit selects the polarity of the edges that trigger the TA input.
0 – TA input is sensitive to falling edges (high to low transitions).
1 – TA input is sensitive to rising edges (low to high transitions).

TAEN The TA Enable bit controls whether the TA pin is enabled to operate as a preset input or as a PWM output, depending on the timer operating mode. In Mode 2 (Dual Input Capture), a transition on the TA pin presets the TCNT1 counter to FFFFh. In the other modes, TA functions as a PWM output. When this bit is clear, operation of the pin for the timer/counter is disabled.
0 – TA input disabled.
1 – TA input enabled.

TAOUT The TA Output Data bit indicates the current state of the TA pin when the pin is used as a PWM output. The hardware sets and clears this bit, but software can also read or write this bit at any time and therefore control the state of the output pin. In case of conflict, a software write has precedence over a hardware update. This bit setting has no effect when the TA pin is used as an input.
0 – TA pin is low.
1 – TA pin is high.

TEN The Timer Enable bit controls whether the Multi-Function Timer is enabled. When the module is disabled all clocks to the counter unit are stopped to minimize power consumption. For that reason, the timer/counter registers (TCNT1 and TCNT2), the capture/reload registers (TCRA and TCRB), and the interrupt pending bits (TXPND) cannot be written in this mode. Also, the 5-bit clock prescaler and the interrupt pending bits are cleared, and the TA I/O pin becomes an input.
0 – Multi-Function Timer is disabled.
1 – Multi-Function Timer is enabled.

23.5.8 Timer Interrupt Control Register (TICTL)

The TICTL register is a byte-wide, read/write register that contains the interrupt enable bits and interrupt pending bits for the four timer interrupt sources, designated A, B, C, and D. The condition that causes each type of interrupt depends on the operating mode, as shown in Table 51.

This register is cleared upon reset. The register format is shown below.

7	6	5	4	3	2	1	0
TDIEN	TCIEN	TBIEN	TAIEN	TDPND	TCPND	TBPND	TAPND

TAPND The Timer Interrupt Source A Pending bit indicates that timer interrupt condition A has occurred. For an explanation of interrupt conditions A, B, C, and D, see Table 51. This bit can be set by hardware or by software. To clear this bit, software must use the Timer Interrupt Clear Register (TICLR). Any attempt by software to directly write a 0 to this bit is ignored.
0 – Interrupt source A has not triggered.
1 – Interrupt source A has triggered.

Obsolete

TBPND The Timer Interrupt Source B Pending bit indicates that timer interrupt condition B has occurred. For an explanation of interrupt conditions A, B, C, and D, see Table 51. This bit can be set by hardware or by software. To clear this bit, software must use the Timer Interrupt Clear Register (TICLR). Any attempt by software to directly write a 0 to this bit is ignored.
0 – Interrupt source B has not triggered.
1 – Interrupt source B has triggered.

TCPND The Timer Interrupt Source C Pending bit indicates that timer interrupt condition C has occurred. For an explanation of interrupt conditions A, B, C, and D, see Table 51. This bit can be set by hardware or by software. To clear this bit, software must use the Timer Interrupt Clear Register (TICLR). Any attempt by software to directly write a 0 to this bit is ignored.
0 – Interrupt source C has not triggered.
1 – Interrupt source C has triggered.

TDPND The Timer Interrupt Source D Pending bit indicates that timer interrupt condition D has occurred. For an explanation of interrupt conditions A, B, C, and D, see Table 51. This bit can be set by hardware or by software. To clear this bit, software must use the Timer Interrupt Clear Register (TICLR). Any attempt by software to directly write a 0 to this bit is ignored.
0 – Interrupt source D has not triggered.
1 – Interrupt source D has triggered.

TAIEN The Timer Interrupt A Enable bit controls whether an interrupt is generated on each occurrence of interrupt condition A. For an explanation of interrupt conditions A, B, C, and D, see Table 51.
0 – Condition A interrupts disabled.
1 – Condition A interrupts enabled.

TBIEN The Timer Interrupt B Enable bit controls whether an interrupt is generated on each occurrence of interrupt condition B. For an explanation of interrupt conditions A, B, C, and D, see Table 51.
0 – Condition B interrupts disabled.
1 – Condition B interrupts enabled.

TCIEN The Timer Interrupt C Enable bit controls whether an interrupt is generated on each occurrence of interrupt condition C. For an explanation of interrupt conditions A, B, C, and D, see Table 51.
0 – Condition C interrupts disabled.
1 – Condition C interrupts enabled.

TDIEN The Timer Interrupt D Enable bit controls whether an interrupt is generated on each occurrence of interrupt condition D. For an explanation of interrupt conditions A, B, C, and D, see Table 51.
0 – Condition D interrupts disabled.
1 – Condition D interrupts enabled.

23.5.9 Timer Interrupt Clear Register (TICLR)

The TICLR register is a byte-wide, write-only register that allows software to clear the TAPND, TBPND, TCPND, and TDPND bits in the Timer Interrupt Control (TICTRL) register. Do not modify this register with instructions that access the register as a read-modify-write operand, such as the bit manipulation instructions. The register reads as FFh. The register format is shown below.

7 – 4	3	2	1	0
Reserved	TDCLR	TCCLR	TBCLR	TACLR

TACLR The Timer Pending A Clear bit is used to clear the Timer Interrupt Source A Pending bit (TAPND) in the Timer Interrupt Control register (TICTL).
0 – Writing a 0 has no effect.
1 – Writing a 1 clears the TAPND bit.

TBCLR The Timer Pending A Clear bit is used to clear the Timer Interrupt Source B Pending bit (TBPND) in the Timer Interrupt Control register (TICTL).
0 – Writing a 0 has no effect.
1 – Writing a 1 clears the TBPND bit.

TCCLR The Timer Pending C Clear bit is used to clear the Timer Interrupt Source C Pending bit (TCPND) in the Timer Interrupt Control register (TICTL).
0 – Writing a 0 has no effect.
1 – Writing a 1 clears the TCPND bit.

TDCLR The Timer Pending D Clear bit is used to clear the Timer Interrupt Source D Pending bit (TDPND) in the Timer Interrupt Control register (TICTL).
0 – Writing a 0 has no effect.
1 – Writing a 1 clears the TDPND bit.

Obsolete

24.0 Versatile Timer Unit (VTU)

The VTU contains four fully independent 16-bit timer subsystems. Each timer subsystem can operate either as dual 8-bit PWM timers, as a single 16-bit PWM timer, or as a 16-bit counter with 2 input capture channels. These timer subsystems offers an 8-bit clock prescaler to accommodate a wide range of system frequencies.

The VTU offers the following features:

- The VTU can be configured to provide:
  - — Eight fully independent 8-bit PWM channels
  - — Four fully independent 16-bit PWM channels
  - — Eight 16-bit input capture channels
- The VTU consists of four timer subsystems, each of which contains:
  - — A 16-bit counter
  - — Two 16-bit capture / compare registers
  - — An 8-bit fully programmable clock prescaler
- Each of the four timer subsystems can operate in the following modes:
  - — Low power mode, i.e. all clocks are stopped
  - — Dual 8-bit PWM mode
  - — 16-bit PWM mode
  - — Dual 16-bit input capture mode
- The VTU controls a total of eight I/O pins, each of which can function as either:
  - — PWM output with programmable output polarity
  - — Capture input with programmable event detection and timer reset
- A flexible interrupt scheme with
  - — Four separate system level interrupt requests
  - — A total of 16 interrupt sources each with a separate interrupt pending bit and interrupt enable bit

24.1 VTU FUNCTIONAL DESCRIPTION

The VTU is comprised of four timer subsystems. Each timer subsystem contains an 8-bit clock prescaler, a 16-bit up-counter, and two 16-bit registers. Each timer subsystem controls two I/O pins which either function as PWM outputs or capture inputs depending on the mode of operation. There are four system-level interrupt requests, one for each timer subsystem. Each system-level interrupt request is controlled by four interrupt pending bits with associated enable/disable bits. All four timer subsystems are fully independent, and each may operate as a dual 8-bit PWM timer, a 16-bit PWM timer, or as a dual 16-bit capture timer. Figure 66 shows the main elements of the VTU.

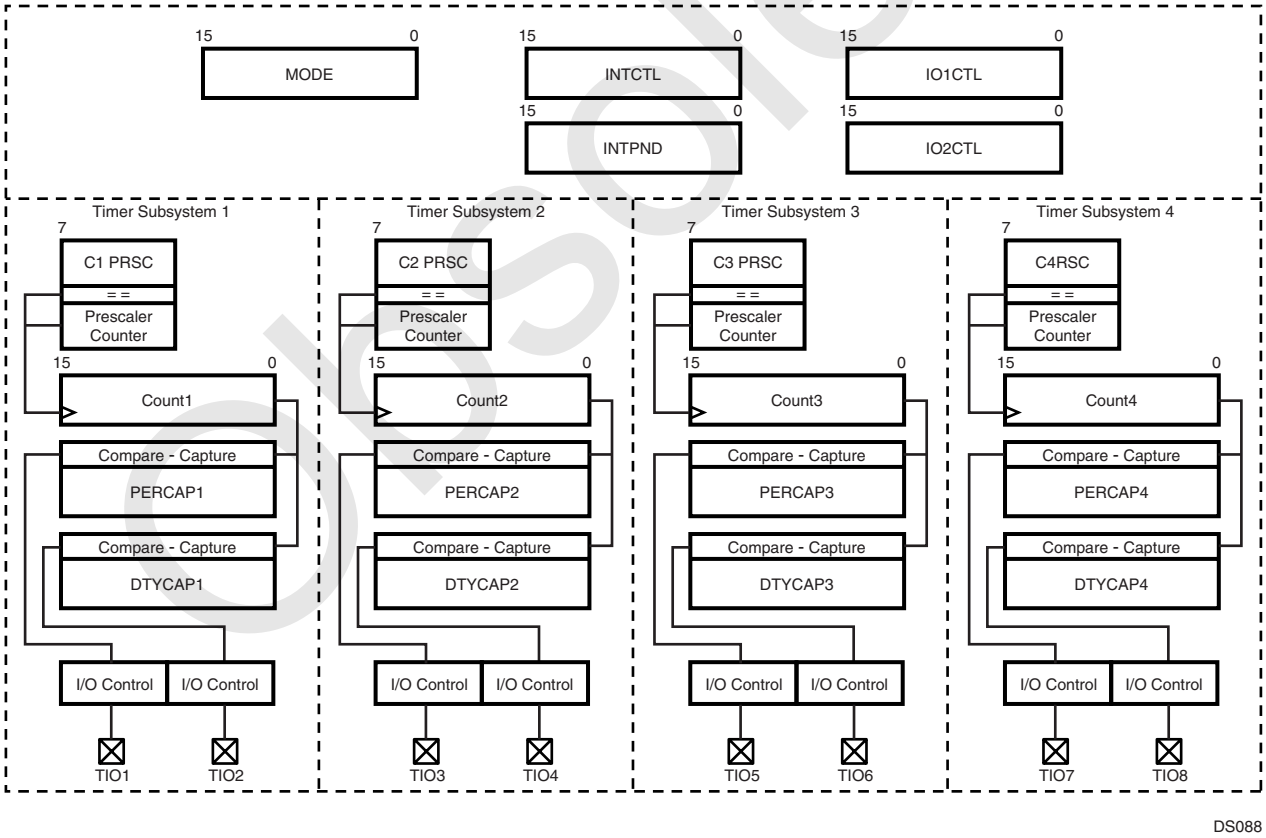

Figure 66. Versatile Timer Unit Block Diagram

Obsolete

24.1.1 Dual 8-bit PWM Mode

Each timer subsystem may be configured to generate two fully independent PWM waveforms on the respective TIOx pins. In this mode, the counter COUNTx is split and operates as two independent 8-bit counters. Each counter increments at the rate determined by the clock prescaler.

Each of the two 8-bit counters may be started and stopped separately using the corresponding TxRUN bits. Once either of the two 8-bit timers is running, the clock prescaler starts counting. Once the clock prescaler counter value matches the value of the associated CxPRSC register field, COUNTx is incremented.

The period of the PWM output waveform is determined by the value of the PERCAPx register. The TIOx output starts at the default value as programmed in the IOxCTL.PxPOL bit. Once the counter value reaches the value of the period register PERCAPx, the counter is cleared on the next counter increment. On the following increment from 00h to 01h, the TIOx output will change to the opposite of the default value.

The duty cycle of the PWM output waveform is controlled by the DTYCAPx register value. Once the counter value reaches the value of the duty cycle register DTYCAPx, the PWM output TIOx changes back to its default value on the next counter increment. Figure 67 illustrates this concept.

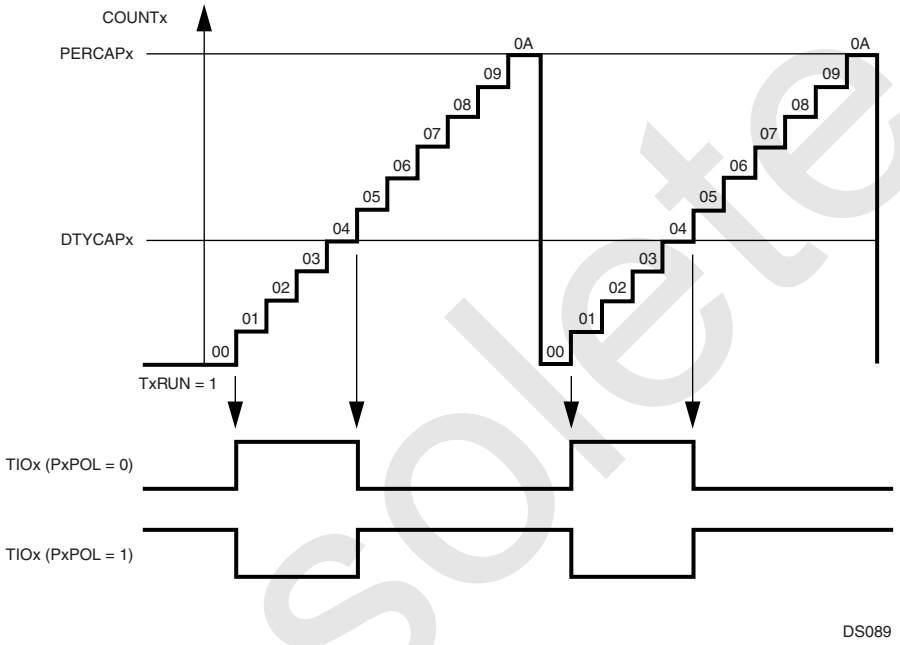

Figure 67. VTU PWM Generation

The period time is determined by the following formula:

$$\text{PWM Period} = (\text{PERCAPx} + 1) \times (\text{CxPRSC} + 1) \times T_{CLK}$$

The duty cycle in percent is calculated as follows:

$$\text{Duty Cycle} = (\text{DTYCAPx} / (\text{PERCAPx} + 1)) \times 100$$

If the duty cycle register (DTYCAPx) holds a value which is greater than the value held in the period register (PERCAPx) the TIOx output will remain at the opposite of its default value which corresponds to a duty cycle of 100%. If the duty cycle register (DTYCAPx) register holds a value of 00h, the TIOx output will remain at the default value which corresponds to a duty cycle of 0%, in which case the value in the PERCAPx register is irrelevant. This scheme allows the duty cycle to be programmed in a range from 0% to 100%.

In order to allow fully synchronized updates of the period and duty cycle compare values, the PERCAPx and DTYCAPx registers are double buffered when operating in PWM mode. Therefore, if software writes to either the period or duty cycle register while either of the two PWM channels is enabled, the new value will not take effect until the counter value matches the previous period value or the timer is stopped.

Reading the PERCAPx or DTYCAPx register will always return the most recent value written to it.

The counter registers can be written if both 8-bit counters are stopped. This allows software to preset the counters before starting, which can be used to generate PWM output waveforms with a phase shift relative to each other. If the counter is written with a value other than 00h, it will start incrementing from that value. The TIOx output will remain at its default value until the first 00h to 01h transition of the counter value occurs. If the counter is preset to values which are less than or equal to the value held in the period register (PERCAPx) the counter will count up until a match between the counter value and the PERCAPx register value occurs. The counter will then be cleared and continue counting up. Alternatively, the counter may be written with a value which is greater than the value held in the period register. In that case the counter will count up to FFh, then roll over to 00h. In any case, the TIOx pin always changes its state at the 00h to 01h transition of the counter.

Software may only write to the COUNTx register if both TxRUN bits of a timer subsystem are clear. Any writes to the counter register while either timer is running will be ignored.

Obsolete

The two I/O pins associated with a timer subsystem function as independent PWM outputs in the dual 8-bit PWM mode. If a PWM timer is stopped using its associated MODE.TxRUN bit the following actions result:

- The associated TIOx pin will return to its default value as defined by the IOxCTL.PxPOL bit.
- The counter will stop and will retain its last value.
- Any pending updates of the PERCAPx and DTYCAPx register will be completed.
- The prescaler counter will be stopped and reset if both MODE.TxRUN bits are cleared.

Figure 68 illustrates the configuration of a timer subsystem while operating in dual 8-bit PWM mode. The numbering in Figure 68 refers to timer subsystem 1 but equally applies to the other three timer subsystems.

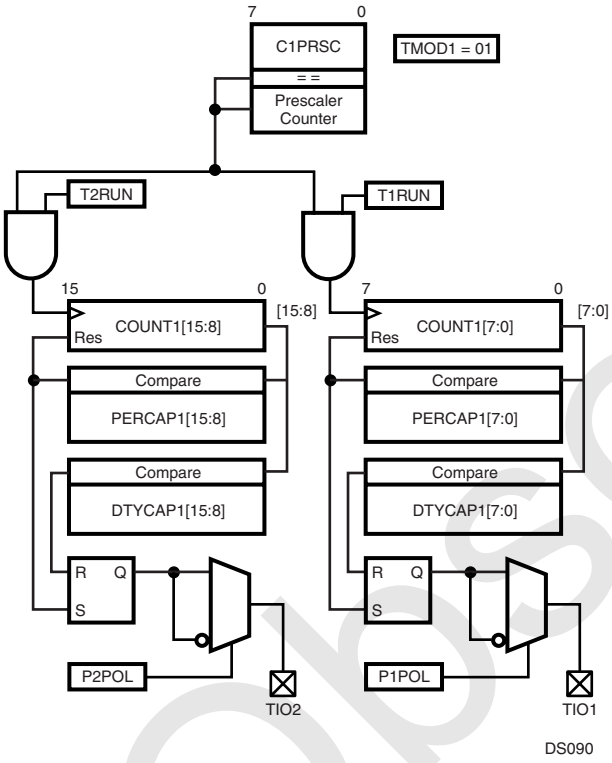

Figure 68. VTU Dual 8-Bit PWM Mode

24.1.2 16-Bit PWM Mode

Each of the four timer subsystems may be independently configured to provide a single 16-bit PWM channel. In this case the lower and upper bytes of the counter are concatenated to form a single 16-bit counter.

Operation in 16-bit PWM mode is conceptually identical to the dual 8-bit PWM operation as outlined under Dual 8-bit PWM Mode on page 153. The 16-bit timer may be started or stopped with the lower MODE.TxRUN bit, i.e. T1RUN for timer subsystem 1.

The two TIOx outputs associated with a timer subsystem can be used to produce either two identical PWM waveforms or two PWM waveforms of opposite polarities. This can be accomplished by setting the two PxPOL bits of the respective timer subsystem to either identical or opposite values.

Figure 69 illustrates the configuration of a timer subsystem while operating in 16-bit PWM mode. The numbering in Figure 69 refers to timer subsystem 1 but equally applies to the other three timer subsystems.

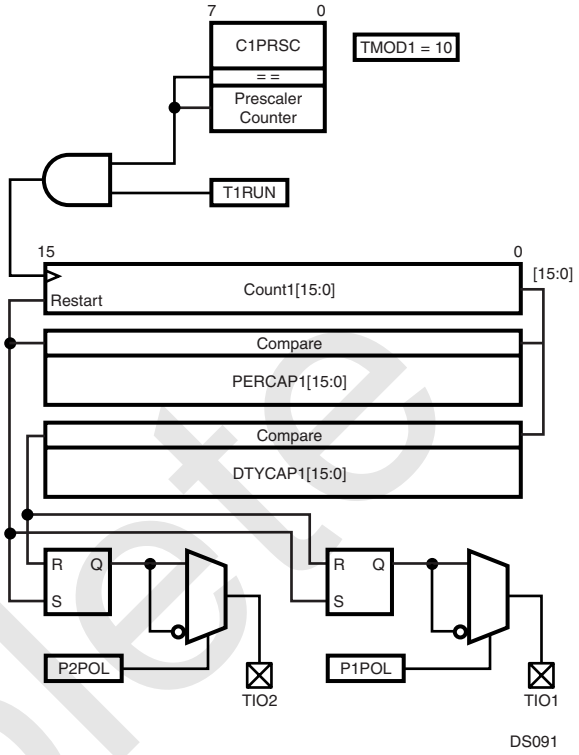

Figure 69. VTU 16-bit PWM Mode

24.1.3 Dual 16-Bit Capture Mode

In addition to the two PWM modes, each timer subsystem may be configured to operate in an input capture mode which provides two 16-bit capture channels. The input capture mode can be used to precisely measure the period and duty cycle of external signals.

In capture mode the counter COUNTx operates as a 16-bit up-counter while the two TIOx pins associated with a timer subsystem operate as capture inputs. A capture event on the TIOx pins causes the contents of the counter register (COUNTx) to be copied to the PERCAPx or DTYCAPx registers respectively.

Starting the counter is identical to the 16-bit PWM mode, i.e. setting the lower of the two MODE.TxRUN bits will start the counter and the clock prescaler. In addition, the capture event inputs are enabled once the MODE.TxRUN bit is set.

The TIOx capture inputs can be independently configured to detect a capture event on either a positive transition, a negative transition or both a positive and a negative transition. In addition, any capture event may be used to reset the counter COUNTx and the clock prescaler counter. This avoids the need for software to keep track of timer overflow conditions and greatly simplifies the direct frequency and duty cycle measurement of an external signal.

Obsolete

Figure 70 illustrates the configuration of a timer subsystem while operating in capture mode. The numbering in Figure 70 refers to timer subsystem 1 but equally applies to the other three timer subsystems.

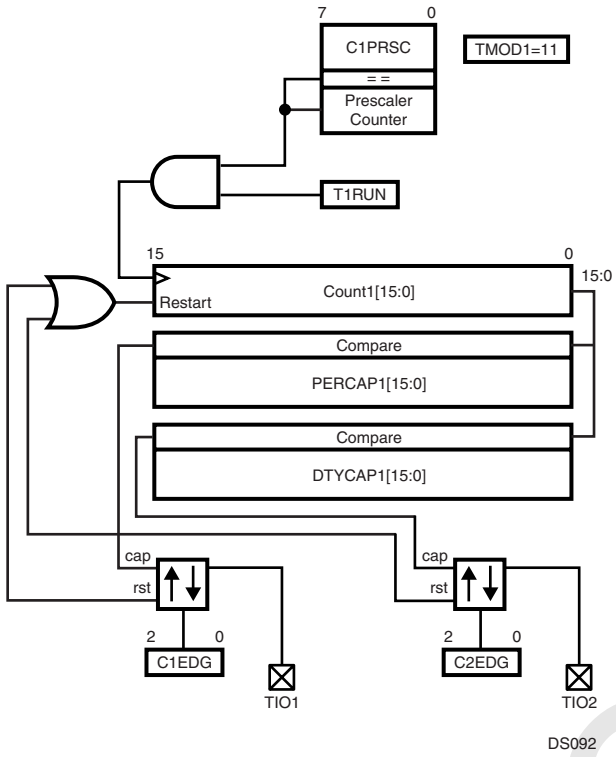

Figure 70. VTU Dual 16-bit Capture Mode

24.1.4 Low Power Mode

In case a timer subsystem is not used, software can place it in a low-power mode. All clocks to a timer subsystem are stopped and the counter and prescaler contents are frozen once low-power mode is entered. Software may continue to write to the MODE, INTCTL, IOxCTL, and CLKxPS registers. Write operations to the INTPND register are allowed; but if a timer subsystem is in low-power mode, its associated interrupt pending bits cannot be cleared. Software cannot write to the COUNTx, PERCAPx, and DTYCAPx registers of a timer subsystem while it is in low-power mode. All registers can be read at any time.

24.1.5 Interrupts

The VTU has a total of 16 interrupt sources, four for each of the four timer subsystems. All interrupt sources have a pending bit and an enable bit associated with them. All interrupt pending bits are denoted IxAPD through IxDPD where “x” relates to the specific timer subsystem. There is one system level interrupt request for each of the four timer subsystems.

Figure 71 illustrates the interrupt structure of the versatile timer module.

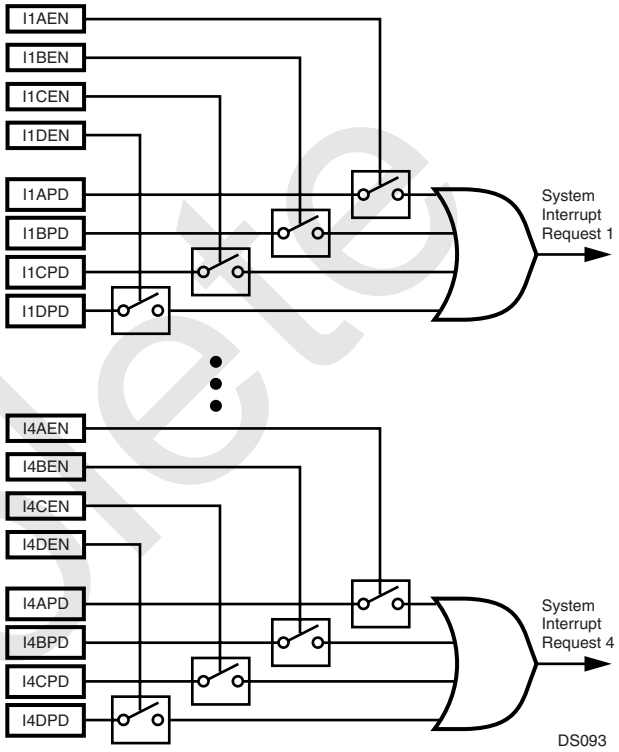

Figure 71. VTU Interrupt Request Structure

Each of the timer pending bits - IxAPD through IxDPD - is set by a specific hardware event depending on the mode of operation, i.e., PWM or Capture mode. Table 54 outlines the specific hardware events relative to the operation mode which cause an interrupt pending bit to be set.

Table 54 VTU Interrupt Sources

Pending Flag	Dual 8-bit PWM Mode	16-bit PWM Mode	Capture Mode
IxAPD	Low Byte Duty Cycle match	Duty Cycle match	Capture to PERCAPx
IxBPD	Low Byte Period match	Period match	Capture to DTYCAPx
IxCPD	High Byte Duty Cycle match	N/A	Counter Overflow
IxDPD	High Byte Period match	N/A	N/A

24.1.6 ISE Mode operation

The VTU supports breakpoint operation of the In-System-Emulator (ISE). If FREEZE is asserted, all timer counter clocks will be inhibited and the current value of the timer registers will be frozen; in capture mode, all further capture events are disabled. Once FREEZE becomes inactive, counting will resume from the previous value and the capture input events are re-enabled.

Obsolete

24.2 VTU REGISTERS

The VTU contains a total of 19 user accessible registers, as listed in Table 55. All registers are word-wide and are initialized to a known value upon reset. All software accesses to the VTU registers must be word accesses.

Table 55 VTU Registers

Name	Address	Description
MODE	FF FF80h	Mode Control Register
IO1CTL	FF FF82h	I/O Control Register 1
IO2CTL	FF FF84h	I/O Control Register 2
INTCTL	FF FF86h	Interrupt Control Register
INTPND	FF FF88h	Interrupt Pending Register
CLK1PS	FF FF8Ah	Clock Prescaler Register 1
CLK2PS	FF FF98h	Clock Prescaler Register 2
COUNT1	FF FF8Ch	Counter 1 Register
PERCAP1	FF FF8Eh	Period/Capture 1 Register
DTYCAP1	FF FF90h	Duty Cycle/Capture 1 Register
COUNT2	FF FF92h	Counter 2 Register
PERCAP2	FF FF94h	Period/Capture 2 Register
DTYCAP2	FF FF96h	Duty Cycle/Capture 2 Register
COUNT3	FF FF9Ah	Counter 3 Register
PERCAP3	FF FF9Ch	Period/Capture 3 Register
DTYCAP3	FF FF9Eh	Duty Cycle/Capture 3 Register
COUNT4	FF FFA0h	Counter 4 Register
PERCAP4	FF FFA2h	Period/Capture 4 Register
DTYCAP4	FF FFA4h	Duty Cycle/Capture 4 Register

24.2.1 Mode Control Register (MODE)

The MODE register is a word-wide read/write register which controls the mode selection of all four timer subsystems. The register is clear after reset.

7 6	5	4	3 2	1	0
TMOD2	T4RUN	T3RUN	TMOD1	T2RUN	T1RUN

15 14	13	12	11 10	9	8
TMOD4	T8RUN	T7RUN	TMOD3	T6RUN	T5RUN

TxRUN The Timer Run bit controls whether the corresponding timer is stopped or running. If set, the associated counter and clock prescaler is started depending on the mode of operation. Once set, the clock to the clock prescaler and the counter are enabled and the counter will increment each time the clock prescaler counter value matches the value defined in the associated clock prescaler field (CxPRSC).

0 – Timer stopped.

1 – Timer running.

TMODx The Timer System Operating Mode field enables or disables the Timer Subsystem and defines its operating mode.

00 – *Low-Power Mode.* All clocks to the counter subsystem are stopped. The counter is stopped regardless of the value of the TxRUN bits. Read operations to the Timer Subsystem will return the last value; software must not perform any write operations to the Timer Subsystem while it is disabled since those will be ignored.

01 – *Dual 8-bit PWM mode.* Each 8-bit counter may individually be started or stopped via its associated TxRUN bit. The TIOx pins will function as PWM outputs.

10 – *16-bit PWM mode.* The two 8-bit counters are concatenated to form a single 16-bit counter. The counter may be started or stopped with the lower of the two TxRUN bits, i.e. T1RUN, T3RUN, T5RUN, and T7RUN. The TIOx pins will function as PWM outputs.

11 – *Capture Mode.* Both 8-bit counters are concatenated and operate as a single 16-bit counter. The counter may be started or stopped with the lower of the two TxRUN bits, i.e., T1RUN, T3RUN, T5RUN, and T7RUN. The TIOx pins will function as capture inputs.

Obsolete

24.2.2 I/O Control Register 1 (IO1CTL)

The I/O Control Register 1 (IO1CTL) is a word-wide read/write register. The register controls the function of the I/O pins TIO1 through TIO4 depending on the selected mode of operation. The register is clear after reset.

7	6 4	3	2 0
P2POL	C2EDG	P1POL	C1EDG

15	14 12	11	10 8
P4POL	C4EDG	P3POL	C3EDG

CxEDG The Capture Edge Control field specifies the polarity of a capture event and the reset of the counter. The value of this three bit field has no effect while operating in PWM mode.

CxEDG	Capture	Counter Reset
000	Rising edge	No
001	Falling edge	No
010	Rising edge	Yes
011	Falling edge	Yes
100	Both edges	No
101	Both edges	Rising edge
110	Both edges	Falling edge
111	Both edges	Both edges

PxPOL The PWM Polarity bit selects the output polarity. While operating in PWM mode the bit specifies the polarity of the corresponding PWM output (TIOx). Once a counter is stopped, the output will assume the value of PxPOL, i.e., its initial value. The PxPOL bit has no effect while operating in capture mode.

0 – The PWM output goes high at the 00h to 01h transition of the counter and will go low once the counter value matches the duty cycle value.

1 – The PWM output goes low at the 00h to 01h transition of the counter and will go high once the counter value matches the duty cycle value.

24.2.3 I/O Control Register 2 (IO2CTL)

The IO2CTL register is a word-wide read/write register. The register controls the functionality of the I/O pins TIO5 through TIO8 depending on the selected mode of operation. The register is cleared at reset.

7	6 4	3	2 0
P6POL	C6EDG	P5POL	C5EDG

15	14 12	11	10 8
P8POL	C8EDG	P7POL	C7EDG

The functionality of the bit fields of the IO2CTL register is identical to the ones described in the IO1CTL register section.

24.2.4 Interrupt Control Register (INTCTL)

The INTCTL register is a word-wide read/write register. It contains the interrupt enable bits for all 16 interrupt sources of the VTU. Each interrupt enable bit corresponds to an interrupt pending bit located in the Interrupt Pending Register (INTPND). All INTCTL register bits are solely under software control. The register is clear after reset.

7	6	5	4	3	2	1	0
I2DEN	I2CEN	I2BEN	I2AEN	I1DEN	I1CEN	I1BEN	I1AEN

15	14	13	12	11	10	9	8
I4DEN	I4CEN	I4BEN	I4AEN	I3DEN	I3CEN	I3BEN	I3AEN

IxAEN The Timer x Interrupt A Enable bit controls interrupt requests triggered on the corresponding IxAPD bit being set. The associated IxAPD bit will be updated regardless of the value of the IxAEN bit.

0 – Disable system interrupt request for the IxAPD pending bit.

1 – Enable system interrupt request for the IxAPD pending bit.

IxBEN The Timer x Interrupt B Enable bit controls interrupt requests triggered on the corresponding IxBPD bit being set. The associated IxBPD bit will be updated regardless of the value of the IxBEN bit.

0 – Disable system interrupt request for the IxBPD pending bit.

1 – Enable system interrupt request for the IxBPD pending bit.

Obsolete

IxCEN — The Timer x Interrupt C Enable bit controls interrupt requests triggered on the corresponding IxCPD bit being set. The associated IxCPD bit will be updated regardless of the value of the IxCEN bit.
- 0 – Disable system interrupt request for the IxCPD pending bit.
- 1 – Enable system interrupt request for the IxCPD pending bit.

IxDEN — Timer x Interrupt D Enable bit controls interrupt requests triggered on the corresponding IxDPD bit being set. The associated IxDPD bit will be updated regardless of the value of the IxDEN bit.
- 0 – Disable system interrupt request for the IxDPD pending bit.
- 1 – Enable system interrupt request for the IxDPD pending bit.

24.2.5 Interrupt Pending Register (INTPND)

The INTPND register is a word-wide read/write register which contains all 16 interrupt pending bits. There are four interrupt pending bits called IxAPD through IxDPD for each timer subsystem. Each interrupt pending bit is set by a hardware event and can be cleared if software writes a 1 to the bit position. The value will remain unchanged if a 0 is written to the bit position. All interrupt pending bits are cleared (0) upon reset.

7	6	5	4	3	2	1	0
I2DPD	I2CPD	I2BPD	I2APD	I1DPD	I1CPD	I1BPD	I1APD

15	14	13	12	11	10	9	8
I4DPD	I4CPD	I4BPD	I4APD	I3DPD	I3CPD	I3BPD	I3APD

IxAPD — The Timer x Interrupt A Pending bit indicates that an interrupt condition for the related timer subsystem has occurred. Table 54 on page 155 lists the hardware condition which causes this bit to be set.
- 0 – No interrupt pending.
- 1 – Timer interrupt condition occurred.

IxBPD — The Timer x Interrupt B Pending bit indicates that an interrupt condition for the related timer subsystem has occurred. Table 54 on page 155 lists the hardware condition which causes this bit to be set.
- 0 – No interrupt pending.
- 1 – Timer interrupt condition occurred.

IxCPD — The Timer x Interrupt C Pending bit indicates that an interrupt condition for the related timer subsystem has occurred. Table 54 on page 155 lists the hardware condition which causes this bit to be set.
- 0 – No interrupt pending.
- 1 – Timer interrupt condition occurred.

IxDPD — The Timer x Interrupt D Pending bit indicates that an interrupt condition for the related timer subsystem has occurred. Table 54 on page 155 lists the hardware condition which causes this bit to be set.
- 0 – No interrupt pending.
- 1 – Timer interrupt condition occurred.

24.2.6 Clock Prescaler Register 1 (CLK1PS)

The CLK1PS register is a word-wide read/write register. The register is split into two 8-bit fields called C1PRSC and C2PRSC. Each field holds the 8-bit clock prescaler compare value for timer subsystems 1 and 2 respectively. The register is cleared at reset.

15 – 8	7 – 0
C2PRSC	C1PRSC

C1PRSC — The Clock Prescaler 1 Compare Value field holds the 8-bit prescaler value for timer subsystem 1. The counter of timer subsystem is incremented each time when the clock prescaler compare value matches the value of the clock prescaler counter. The division ratio is equal to (C1PRSC + 1). For example, 00h is a ratio of 1, and FFh is a ratio of 256.

C2PRSC — The Clock Prescaler 2 Compare Value field holds the 8-bit prescaler value for timer subsystem 2. The counter of timer subsystem is incremented each time when the clock prescaler compare value matches the value of the clock prescaler counter. The division ratio is equal to (C2PRSC + 1).

24.2.7 Clock Prescaler Register 2 (CLK2PS)

The Clock Prescaler Register 2 (CLK2PS) is a word-wide read/write register. The register is split into two 8-bit fields called C3PRSC and C4PRSC. Each field holds the 8-bit clock prescaler compare value for timer subsystems 3 and 4 respectively. The register is cleared at reset.

15 – 8	7 – 0
C4PRSC	C3PRSC

C3PRSC — The Clock Prescaler 3 Compare Value field holds the 8-bit prescaler value for timer subsystem 3. The counter of timer subsystem is incremented each time when the clock prescaler compare value matches the value of the clock prescaler counter. The division ratio is equal to (C3PRSC + 1).

C4PRSC — The Clock Prescaler 4 Compare Value field holds the 8-bit prescaler value for timer subsystem 4. The counter of timer subsystem is incremented each time when the clock prescaler compare value matches the value of the clock prescaler counter. The division ratio is equal to (C4PRSC + 1).

Obsolete

24.2.8 Counter Register n (COUNTx)

The Counter (COUNTx) registers are word-wide read/write registers. There are a total of four registers called COUNT1 through COUNT4, one for each of the four timer subsystems. Software may read the registers at any time. Reading the register will return the current value of the counter. The register may only be written if the counter is stopped (i.e. if both TxRUN bits associated with a timer subsystem are clear). The registers are cleared at reset.

15	0
CNTx	

24.2.9 Period/Capture Register n (PERCAPx)

The PERCAPx registers are word-wide read/write registers. There are a total of four registers called PERCAP1 through PERCAP4, one for each timer subsystem. The registers hold the period compare value in PWM mode of the counter value at the time the last associated capture event occurred. In PWM mode the register is double buffered. If a new period compare value is written while the counter is running, the write will not take effect until counter value matches the previous period compare value or until the counter is stopped. Reading may take place at any time and will return the most recent value which was written. The PERCAPx registers are cleared at reset.

15	0
PCAPx	

24.2.10 Duty Cycle/Capture Register n (DTYCAPx)

The Duty Cycle/Capture (DTYCAPx) registers are word-wide read/write registers. There are a total of four registers called DTYCAP1 through DTYCAP4, one for each timer subsystem. The registers hold the period compare value in PWM mode or the counter value at the time the last associated capture event occurred. In PWM mode, the register is double buffered. If a new duty cycle compare value is written while the counter is running, the write will not take effect until the counter value matches the previous period compare value or until the counter is stopped. The update takes effect on period boundaries only. Reading may take place at any time and will return the most recent value which was written. The DTYCAPx registers are cleared at reset.

15	0
DCAPx	

Obsolete

25.0 Register Map

Table 56 is a detailed memory map showing the specific memory address of the memory, I/O ports, and registers. The table shows the starting address, the size, and a brief description of each memory block and register. For detailed information on using these memory locations, see the applicable sections in the data sheet.

All addresses not listed in the table are reserved and must not be read or written. An attempt to access an unlisted address will have unpredictable results.

Each byte-wide register occupies a single address and can be accessed only in a byte-wide transaction. Each word-wide register occupies two consecutive memory addresses and can be accessed only in a word-wide transaction. Both the byte-wide and word-wide registers reside at word boundaries (even addresses). Therefore, each byte-wide register uses only the lowest eight bits of the internal data bus.

Most device registers are read/write registers. However, some registers are read-only or write-only, as indicated in the table. An attempt to read a write-only register or to write a read-only register will have unpredictable results.

When software writes to a register in which one or more bits are reserved, it must write a zero to each reserved bit unless indicated otherwise in the description of the register. Reading a reserved bit returns an undefined value.

Table 56 Detailed Device Mapping

Register Name	Size	Address	Access Type	Value After Reset	Comments
Bluetooth LLC Registers					
PLN	Byte	0E F180h	Write-Only		
WHITENING_CHANNEL_SELECTION	Byte	0E F181h	Write-Only		
SINGLE_FREQUENCY_SELECTION	Byte	0E F182h	Write-Only		
LN_BT_CLOCK_0	Byte	0E F198h	Read-Only		
LN_BT_CLOCK_1	Byte	0E F199h	Read-Only		
LN_BT_CLOCK_2	Byte	0E F19Ah	Read-Only		
LN_BT_CLOCK_3	Byte	0E F19Bh	Read-Only		
RX_CN	Byte	0E F19Ch	Read-Only		
TX_CN	Byte	0E F19Dh	Read-Only		
AC_ACCEPTLVL	Word	0E F19Eh	Write-Only		
LAP_ACCEPTLVL	Byte	0E F1A0h	Write-Only		
RFSYNCH_DELAY	Byte	0E F1A1h	Write-Only		
SPI_READ	Word	0E F1A2h	Read-Only		
SPI_MODE_CONFIG	Byte	0E F1A4h	Write-Only		
M_COUNTER_0	Byte	0E F1A6h	Read/Write		
M_COUNTER_1	Byte	0E F1A7h	Read/Write		
M_COUNTER_2	Byte	0E F1A8h	Read/Write		
N_COUNTER_0	Byte	0E F1AAh	Write-Only		
N_COUNTER_1	Byte	0E F1ABh	Write-Only		
BT_CLOCK_WR_0	Byte	0E F1ACh	Write-Only		
BT_CLOCK_WR_1	Byte	0E F1ADh	Write-Only		
BT_CLOCK_WR_2	Byte	0E F1AEh	Write-Only		
BT_CLOCK_WR_3	Byte	0E F1AFh	Write-Only		

Obsolete

Register Name	Size	Address	Access Type	Value After Reset	Comments
WTPTC_1SLOT	Word	0E F1B0h	Write-Only		
WTPTC_3SLOT	Word	0E F1B2h	Write-Only		
WTPTC_5SLOT	Word	0E F1B4h	Write-Only		
SEQ_RESET	Byte	0E F1B6h	Write-Only		
SEQ_CONTINUE	Byte	0E F1B7h	Write-Only		
RX_STATUS	Byte	0E F1B8h	Read-Only		
CHIP_ID	Byte	0E F1BAh	Read-Only		
INT_VECTOR	Byte	0E F1BCh	Read-Only		
SYSTEM_CLK_EN	Byte	0E F1BEh	Write-Only		
LINKTIMER_WR_RD	Word	0E F1C0h	Read-Only		
LINKTIMER_SELECT	Byte	0E F1C2h	Read-Only		
LINKTIMER_STATUS_EXP_FLAG	Byte	0E F1C4h	Read-Only		
LINKTIMER_STATUS_RD_WR_FLAG	Byte	0E F1C5h	Read-Only		
LINKTIMER_ADJUST_PLUS	Byte	0E F1C6h	Read-Only		
LINKTIMER_ADJUST_MINUS	Byte	0E F1C7h	Read-Only		
SLOTTIMER_WR_RD	Byte	0E F1C8h	Read-Only		
USB Node Registers					
MCNTRL	Byte	FF FD80h	Read/Write	00h	
FAR	Byte	FF FD88h	Read/Write	00h	
NFSR	Byte	FF FD8Ah	Read/Write	00h	
MAEV	Byte	FF FD8Ch	Read/Write	00h	
MAMSK	Byte	FF FD8Eh	Read/Write	00h	
ALTEV	Byte	FF FD90h	Read/Write	00h	
ALTMSK	Byte	FF FD92h	Read/Write	00h	
TXEV	Byte	FF FD94h	Read/Write	00h	
TXMSK	Byte	FF FD96h	Read/Write	00h	
RXEV	Byte	FF FD98h	Read/Write	00h	
RXMSK	Byte	FF FD9Ah	Read/Write	00h	
NAKEV	Byte	FF FD9Ch	Read/Write	00h	
NAKMSK	Byte	FF FD9Eh	Read/Write	00h	
FWEV	Byte	FF FDA0h	Read/Write	00h	
FWMSK	Byte	FF FDA2h	Read/Write	00h	
FNH	Byte	FF FDA4h	Read/Write	C0h	
FNL	Byte	FF FDA6h	Read/Write	00h	
DMACNTRL	Byte	FF FDA8h	Read/Write	00h	

Obsolete

Register Name	Size	Address	Access Type	Value After Reset	Comments
DMAEV	Byte	FF FDAAh	Read/Write	00h	
DMAMSK	Byte	FF FDACh	Read/Write	00h	
MIR	Byte	FF FDAEh	Read/Write	1Fh	
DMACNT	Byte	FF FDB0h	Read/Write	00h	
DMAERR	Byte	FF FDB2h	Read/Write	00h	
EPC0	Byte	FF FDC0h	Read/Write	00h	
TXD0	Byte	FF FDC2h	Read/Write		
TXS0	Byte	FF FDC4h	Read/Write	08h	
TXC0	Byte	FF FDC6h	Read/Write	00h	
RXD0	Byte	FF FDCAh	Read/Write	XXh	
RXS0	Byte	FF FDCCh	Read/Write	00h	
RXC0	Byte	FF FDCEh	Read/Write	00h	
EPC1	Byte	FF FDD0h	Read/Write	00h	
TXD1	Byte	FF FDD2h	Read/Write	XXh	
TXS1	Byte	FF FDD4h	Read/Write	1Fh	
TXC1	Byte	FF FDD6h	Read/Write	00h	
EPC2	Byte	FF FDD8h	Read/Write	00h	
RXD1	Byte	FF FDDAh	Read/Write	XXh	
RXS1	Byte	FF FDDCh	Read/Write	00h	
RXC1	Byte	FF FDDEh	Read/Write	00h	
EPC3	Byte	FF FDE0h	Read/Write	00h	
TXD2	Byte	FF FDE2h	Read/Write	XXh	
TXS2	Byte	FF FDE4h	Read/Write	1Fh	
TXC2	Byte	FF FDE6h	Read/Write	00h	
EPC4	Byte	FF FDE8h	Read/Write	00h	
RXD2	Byte	FF FDEAh	Read/Write	XXh	
RXS2	Byte	FF FDECh	Read/Write	00h	
RXC2	Byte	FF FDEEh	Read/Write	00h	
EPC5	Byte	FF FDF0h	Read/Write	00h	
TXD3	Byte	FF FDF2h	Read/Write	XXh	
TXS3	Byte	FF FDF4h	Read/Write	1Fh	
TXC3	Byte	FF FDF6h	Read/Write	00h	
EPC6	Byte	FF FDF8h	Read/Write	00h	
RXD3	Byte	FF FDFAh	Read/Write	XXh	
RXS3	Byte	FF FDFCh	Read/Write	00h	
RXC3	Byte	FF FDFEh	Read/Write	00h	

Obsolete

Register Name	Size	Address	Access Type	Value After Reset	Comments
DMA Controller					
ADCA0	Double Word	FF F800h	Read/Write	0000 0000h	
ADRA0	Double Word	FF F804h	Read/Write	0000 0000h	
ADCB0	Double Word	FF F808h	Read/Write	0000 0000h	
ADRB0	Double Word	FF F80Ch	Read/Write	0000 0000h	
BLTC0	Word	FF F810h	Read/Write	0000h	
BLTR0	Word	FF F814h	Read/Write	0000h	
DMACNTL0	Word	FF F81Ch	Read/Write	0000h	
DMASTAT0	Byte	FF F81Eh	Read/Write	00h	
ADCA1	Double Word	FF F820h	Read/Write	0000 0000h	
ADRA1	Double Word	FF F824h	Read/Write	0000 0000h	
ADCB1	Double Word	FF F828h	Read/Write	0000 0000h	
ADRB1	Double Word	FF F82Ch	Read/Write	0000 0000h	
BLTC1	Word	FF F830h	Read/Write	0000h	
BLTR1	Word	FF F834h	Read/Write	0000h	
DMACNTL1	Word	FF F83Ch	Read/Write	0000h	
DMASTAT1	Byte	FF F83Eh	Read/Write	00h	
ADCA2	Double Word	FF F840h	Read/Write	0000 0000h	
ADRA2	Double Word	FF F844h	Read/Write	0000 0000h	
ADCB2	Double Word	FF F848h	Read/Write	0000 0000h	
ADRB2	Double Word	FF F84Ch	Read/Write	0000 0000h	
BLTC2	Word	FF F850h	Read/Write	0000h	
BLTR2	Word	FF F854h	Read/Write	0000h	
DMACNTL2	Word	FF F85Ch	Read/Write	0000h	
DMASTAT2	Byte	FF F85Eh	Read/Write	00h	
ADCA3	Double Word	FF F860h	Read/Write	0000 0000h	

Obsolete

Register Name	Size	Address	Access Type	Value After Reset	Comments
ADRA3	Double Word	FF F864h	Read/Write	0000 0000h	
ADCB3	Double Word	FF F868h	Read/Write	0000 0000h	
ADRB3	Double Word	FF F86Ch	Read/Write	0000 0000h	
BLTC3	Word	FF F870h	Read/Write	0000h	
BLTR3	Word	FF F874h	Read/Write	0000h	
DMACNTL3	Word	FF F87Ch	Read/Write	0000h	
DMASTAT3	Byte	FF F87Eh	Read/Write	00h	
Bus Interface Unit					
BCFG	Byte	FF F900h	Read/Write	07h	
IOCFG	Word	FF F902h	Read/Write	069Fh	
SZCFG0	Word	FF F904h	Read/Write	069Fh	
SZCFG1	Word	FF F906h	Read/Write	069Fh	
SZCFG2	Word	FF F908h	Read/Write	069Fh	
System Configuration					
MCFG	Byte	FF F910h	Read/Write	00h	
DBGCFG	Byte	FF F912h	Read/Write	00h	
MSTAT	Byte	FF F914h	Read Only	ENV2:0 pins	
Flash Program Memory Interface					
FMIBAR	Word	FF F940h	Read/Write	0000h	
FMIBDR	Word	FF F942h	Read/Write	0000h	
FM0WER	Word	FF F944h	Read/Write	0000h	
FM1WER	Word	FF F946h	Read/Write	0000h	
FMCTRL	Word	FF F94Ch	Read/Write	0000h	
FMSTAT	Word	FF F94Eh	Read/Write	0000h	
FMPSR	Byte	FF F950h	Read/Write	04h	
FMSTART	Byte	FF F952h	Read/Write	18h	
FMTRAN	Byte	FF F954h	Read/Write	30h	
FMPROG	Byte	FF F956h	Read/Write	16h	
FMPERASE	Byte	FF F958h	Read/Write	04h	
FMMERASE0	Byte	FF F95Ah	Read/Write	EAh	

Obsolete

Register Name	Size	Address	Access Type	Value After Reset	Comments
FMEND	Byte	FF F95Eh	Read/Write	18h	
FMMEND	Byte	FF F960h	Read/Write	3Ch	
FMRCV	Byte	FF F962h	Read/Write	04h	
FMAR0	Word	FF F964h	Read Only		
FMAR1	Word	FF F966h	Read Only		
FMAR2	Word	FF F968h	Read Only		
Flash Data Memory Interface					
FSMIBAR	Word	FF F740h	Read/Write	0000h	
FSMIBDR	Word	FF F742h	Read/Write	0000h	
FSM0WER	Word	FF F744h	Read/Write	0000h	
FSMCTRL	Word	FF F74Ch	Read/Write	0000h	
FSMSTAT	Word	FF F74Eh	Read/Write	0000h	
FSMPSR	Byte	FF F750h	Read/Write	04h	
FSMSTART	Byte	FF F752h	Read/Write	18h	
FSMTRAN	Byte	FF F754h	Read/Write	30h	
FSMPROG	Byte	FF F756h	Read/Write	16h	
FSMPERASE	Byte	FF F758h	Read/Write	04h	
FSMMERASE0	Byte	FF F75Ah	Read/Write	EAh	
FSMEND	Byte	FF F75Eh	Read/Write	18h	
FSMMEND	Byte	FF F760h	Read/Write	3Ch	
FSMRCV	Byte	FF F762h	Read/Write	04h	
FSMAR0	Word	FF F764h	Read Only		
FSMAR1	Word	FF F766h	Read Only		
FSMAR2	Word	FF F768h	Read Only		
CVSD/PCM Converter					
CVSDIN	Word	FF FC20h	Write Only	0000h	
CVSDOUT	Word	FF FC22h	Read Only	0000h	
PCMIN	Word	FF FC24h	Write Only	0000h	
PCMOUT	Word	FF FC26h	Read Only	0000h	
LOGIN	Byte	FF FC28h	Write Only	0000h	
LOGOUT	Byte	FF FC2Ah	Read Only	0000h	
LINEARIN	Word	FF FC2Ch	Write Only	0000h	
LINEAROUT	Word	FF FC2Eh	Read Only	0000h	

Obsolete

Register Name	Size	Address	Access Type	Value After Reset	Comments
CVCTRL	Word	FF FC30h	Read/Write	0000h	
CVSTAT	Word	FF FC32h	Read Only	0000h	
CVTEST	Word	FF FC34h	Read/Write	0000h	
CVRADD	Word	FF FC36h	Read/Write	0000h	
CVRDAT	Word	FF FC38h	Read/Write	0000h	
CVDECOUT	Word	FF FC3Ah	Read Only	0000h	
CVENCIN	Word	FF FC3Ch	Read Only	0000h	
CVENCPR	Word	FF FC3Eh	Read Only	0000h	
Triple Clock + Reset					
CRCTRL	Byte	FF FC40h	Read/Write	00X0 0110b	
PRSFC	Byte	FF FC42h	Read/Write	4Fh	
PRSSC	Byte	FF FC44h	Read/Write	B6h	
PRSAC	Byte	FF FC46h	Read/Write	FFh	
Power Management					
PMMCR	Byte	FF FC60h	Read/Write	00h	
PMMSR	Byte	FF FC62h	Read/Write	0000 0XXXb	
Multi-Input Wake-Up					
WKEDG	Word	FF FC80h	Read/Write	00h	
WKENA	Word	FF FC82h	Read/Write	00h	
WKICTL1	Word	FF FC84h	Read/Write	00h	
WKICTL2	Word	FF FC86h	Read/Write	00h	
WKPND	Word	FF FC88h	Read/Write	00h	Bits may only be set; writing 0 has no effect.
WKPCL	Word	FF FC8Ah	Write Only	XXh	
WKIENA	Word	FF FC8Ch	Read/Write	00h	
General-Purpose I/O ports					
PBALT	Byte	FF FB00h	Read/Write	00h	
PBDIR	Byte	FF FB02h	Read/Write	00h	
PBDIN	Byte	FF FB04h	Read Only	XXh	
PBDOUT	Byte	FF FB06h	Read/Write	XXh	
PBWPU	Byte	FF FB08h	Read/Write	00h	

Obsolete

Register Name	Size	Address	Access Type	Value After Reset	Comments
PBHDRV	Byte	FF FB0Ah	Read/Write	00h	
PBALTS	Byte	FF FB0Ch	Read/Write	00h	
PCALT	Byte	FF FB10h	Read/Write	00h	
PCDIR	Byte	FF FB12h	Read Only	00h	
PCDIN	Byte	FF FB14h	Read/Write	XXh	
PCDOUT	Byte	FF FB16h	Read/Write	XXh	
PCWPU	Byte	FF FB18h	Read/Write	00h	
PCHDRV	Byte	FF FB1Ah	Read/Write	00h	
PCALTS	Byte	FF FB1Ch	Read/Write	00h	
I/O ports with Alternate Functions					
PGALT	Byte	FF FCA0h	Read/Write	00h	
PGDIR	Byte	FF FCA2h	Read/Write	00h	
PGDIN	Byte	FF FCA4h	Read Only	XXh	
PGDOUT	Byte	FF FCA6h	Read/Write	XXh	
PGWPU	Byte	FF FCA8h	Read/Write	00h	
PGHDRV	Byte	FF FCAAh	Read/Write	00h	
PGALTS	Byte	FF FCACh	Read/Write	00h	
PHALT	Byte	FF FCC0h	Read/Write	00h	
PHDIR	Byte	FF FCC2h	Read/Write	00h	
PHDIN	Byte	FF FCC4h	Read Only	XXh	
PHDOUT	Byte	FF FCC6h	Read/Write	XXh	
PHWPU	Byte	FF FCC8h	Read/Write	00h	
PHHDRV	Byte	FF FCCAh	Read/Write	00h	
PHALTS	Byte	FF FCCCh	Read/Write	00h	
PIALT	Byte	FF FEE0h	Read/Write	00h	
PIDIR	Byte	FF FEE2h	Read/Write	00h	
PIDIN	Byte	FF FEE4h	Read Only	XXh	
PIDOUT	Byte	FF FEE6h	Read/Write	XXh	
PIWPU	Byte	FF FEE8h	Read/Write	00h	
PIHDRV	Byte	FF FEEAh	Read/Write	00h	
PIALTS	Byte	FF FEECh	Read/Write	00h	

Obsolete

Register Name	Size	Address	Access Type	Value After Reset	Comments
Advanced Audio Interface					
ARFR	Word	FF FD40h	Read Only	0000h	
ARDR0	Word	FF FD42h	Read Only	0000h	
ARDR1	Word	FF FD44h	Read Only	0000h	
ARDR2	Word	FF FD46h	Read Only	0000h	
ARDR3	Word	FF FD48h	Read Only	0000h	
ATFR	Word	FF FD4Ah	Write Only	XXXXh	
ATDR0	Word	FF FD4Ch	Write Only	0000h	
ATDR1	Word	FF FD4Eh	Write Only	0000h	
ATDR2	Word	FF FD50h	Write Only	0000h	
ATDR3	Word	FF FD52h	Write Only	0000h	
AGCR	Word	FF FD54h	Read/Write	0000h	
AISCR	Word	FF FD56h	Read/Write	0000h	
ARSCR	Word	FF FD58h	Read/Write	0004h	
ATSCR	Word	FF FD5Ah	Read/Write	F003h	
ACCR	Word	FF FD5Ch	Read/Write	0000h	
ADMACR	Word	FF FD5Eh	Read/Write	0000h	
Interrupt Control Unit					
IVCT	Byte	FF FE00h	Read Only	10h	Fixed Addr.
NMISTAT	Byte	FF FE02h	Read Only	00h	
EXNMI	Byte	FF FE04h	Read/Write	XXXX 00X0b	
ISTAT0	Word	FF FE0Ah	Read Only	0000h	
ISTAT1	Word	FF FE0Ch	Read Only	0000h	
IENAM0	Word	FF FE0Eh	Read/Write	0000h	
IENAM1	Word	FF FE10h	Read/Write	0000h	
UART					
UTBUF	Byte	FF FE40h	Read/Write	XXh	
URBUF	Byte	FF FE42h	Read Only	XXh	
UICTRL	Byte	FF FE44h	Read/Write	01h	Bits 0:1 read only
USTAT	Byte	FF FE46h	Read only	00h	
UFRS	Byte	FF FE48h	Read/Write	00h	
UMDSL1	Byte	FF FE4Ah	Read/Write	00h	

Obsolete

Register Name	Size	Address	Access Type	Value After Reset	Comments
UBAUD	Byte	FF FE4Ch	Read/Write	00h	
UPSR	Byte	FF FE4Eh	Read/Write	00h	
UOVR	Byte	FF FE50h	Read/Write	00h	
UMDSL2	Byte	FF FE52h	Read/Write	00h	
USPOS	Byte	FF FE54h	Read/Write	06h	
Microwire/SPI interface					
MWDAT	Word	FF FE60h	Read/Write	XXXXh	
MWCTL1	Word	FF FE62h	Read/Write	0000h	
MWSTAT	Word	FF FE64h	Read Only	All implemented bits are 0	
ACCESS.bus					
ACBSDA	Byte	FF FEC0h	Read/Write	XXh	
ACBST	Byte	FF FEC2h	Read/Write	00h	
ACBCST	Byte	FF FEC4h	Read/Write	00h	
ACBCTL1	Byte	FF FEC6h	Read/Write	00h	
ACBADDR	Byte	FF FEC8h	Read/Write	XXh	
ACBCTL2	Byte	FF FECAh	Read/Write	00h	
ACBADDR2	Byte	FF FECCh	Read/Write	XXh	
ACBCTL3	Byte	FF FECEh	Read/Write	00h	
Timing and Watchdog					
TWCFG	Byte	FF FF20h	Read/Write	00h	
TWCP	Byte	FF FF22h	Read/Write	00h	
TWMT0	Word	FF FF24h	Read/Write	FFFFh	
T0CSR	Byte	FF FF26h	Read/Write	00h	
WDCNT	Byte	FF FF28h	Write Only	0Fh	
WDSDM	Byte	FF FF2Ah	Write Only	5Fh	
Multi-Function Timer					
TCNT1	Word	FF FF40h	Read/Write	XXh	
TCRA	Word	FF FF42h	Read/Write	XXh	
TCRB	Word	FF FF44h	Read/Write	XXh	

Obsolete

Register Name	Size	Address	Access Type	Value After Reset	Comments
TCNT2	Word	FF FF46h	Read/Write	XXh	
TPRSC	Byte	FF FF48h	Read/Write	00h	
TCKC	Byte	FF FF4Ah	Read/Write	00h	
TCTRL	Byte	FF FF4Ch	Read/Write	00h	
TICTL	Byte	FF FF4Eh	Read/Write	00h	
TICLR	Byte	FF FF50h	Read/Write	00h	
Versatile Timer Unit					
MODE	Word	FF FF80h	Read/Write	0000h	
IO1CTL	Word	FF FF82h	Read/Write	0000h	
IO2CTL	Word	FF FF84h	Read/Write	0000h	
INTCTL	Word	FF FF86h	Read/Write	0000h	
INTPND	Word	FF FF88h	Read/Write	0000h	
CLK1PS	Word	FF FF8Ah	Read/Write	0000h	
COUNT1	Word	FF FF8Ch	Read/Write	0000h	
PERCAP1	Word	FF FF8Eh	Read/Write	0000h	
DTYCAP1	Word	FF FF90h	Read/Write	0000h	
COUNT2	Word	FF FF92h	Read/Write	0000h	
PERCAP2	Word	FF FF94h	Read/Write	0000h	
DTYCAP2	Word	FF FF96h	Read/Write	0000h	
CLK2PS	Word	FF FF98h	Read/Write	0000h	
COUNT3	Word	FF FF9Ah	Read/Write	0000h	
PERCAP3	Word	FF FF9Ch	Read/Write	0000h	
DTYCAP3	Word	FF FF9Eh	Read/Write	0000h	
COUNT4	Word	FF FFA0h	Read/Write	0000h	
PERCAP4	Word	FF FFA2h	Read/Write	0000h	
DTYCAP4	Word	FF FFA4h	Read/Write	0000h	

Obsolete

26.0 Register Bit Fields

The following tables show the functions of the bit fields of the device registers. For more information on using these registers, see the detailed description of the applicable function elsewhere in this data sheet.

Bluetooth LLC Registers	7	6	5	4	3	2	1	0
PLN	Reserved					PLN[2:0]		
WHITENING_ CHANNEL_ SELECTION	Reserved					CHANNEL_ SELECTION[1:0]		WHITENING
SINGLE_FREQUENCY _SELECTION	Reserved	SINGLE_FREQUENCY_SEL[6:0]						
LN_BT_CLOCK_0	LN_BT_CLOCK[7:0]							
LN_BT_CLOCK_1	LN_BT_CLOCK[15:8]							
LN_BT_CLOCK_2	LN_BT_CLOCK[23:16]							
LN_BT_CLOCK_3	Reserved				LN_BT_CLOCK[27:23]			
RX_CN	Reserved	RX_CN[6:0]						
TX_CN	Reserved	TX_CN[6:0]						
AC_ACCEPTLVL[7:0]	AC_ACCEPTLVL[7:0]							
AC_ACCEPTLVL[15:8]	Reserved						AC_ACCEPTLVL[9:8]	
LAP_ACCEPTLVL	Reserved		LAP_ACCEPTLVL[5:0]					
RFSYNCH_DELAY	Reserved		RFSYNCH_DELAY[5:0]					
SPI_READ[7:0]	SPI_READ[7:0]							
SPI_READ[15:8]	SPI_READ[15:8]							
SPI_MODE_CONFIG	Reserved		SPI_CLK_CONF[1:0]		SPI_LEN_ CONF	SPI_DATA _CONF3	SPI_DATA _CONF2	SPI_DATA_ CONF1
M_COUNTER_0	M_COUNTER[7:0]							
M_COUNTER_1	M_COUNTER[15:8]							
M_COUNTER_2	Reserved			M_COUNTER[20:16]				
N_COUNTER_0	N_COUNTER[7:0]							
N_COUNTER_1	Reserved						N_COUNTER[9:8]	
BT_CLOCK_WR_0	BT_CLOCK_WR[7:0]							
BT_CLOCK_WR_1	BT_CLOCK_WR[15:8]							
BT_CLOCK_WR_2	BT_CLOCK_WR[23:16]							
BT_CLOCK_WR_3	Reserved				BT_CLOCK_WR[27:24]			
WTPTC_1SLOT[7:0]	WTPTC_1SLOT[7:0]							
WTPTC_1SLOT[15:8]	WTPTC_1SLOT[15:8]							
WTPTC_3SLOT[7:0]	WTPTC_3SLOT[7:0]							
WTPTC_3SLOT[15:8]	WTPTC_3SLOT[15:8]							
WTPTC_5SLOT[7:0]	WTPTC_5SLOT[7:0]							

Obsolete

Bluetooth LLC Registers	7	6	5	4	3	2	1	0
WTPTC_5SLOT[15:8]	WTPTC_5SLOT[15:8]							
SEQ_RESET	Reserved							SEQ_RESET
SEQ_CONTINUE	Reserved							SEQ_ CONTINUE
RX_STATUS	Reserved	HEC Error	Header Error Correction	AM_ ADDR Error	Payload CRC Error	Payload Error Correction	Payload Length Error	PACKET_ DONE
CHIP_ID	Reserved				CHIP_ID			
INT_VECTOR	INT_VECTOR[7:0]							
SYSTEM_CLK_EN	Reserved				CLK_EN3	CLK_EN2	INT_SEQ_ EN	BUS_EN
LINK_TIMER_WR_RD[7:0]	LINKTIMER_WR_RD[7:0]							
LINK_TIMER_WR_RD[15:8]	LINKTIMER_WR_RD[15:8]							
LINK_TIMER_SELECT	Reserved				LINKTIMER_SELECT			
LINK_TIMER_STATUS_ EXP_FLAG	LINK_TIMER_STATUS_EXP_FLAG[7:0]							
LINK_TIMER_STATUS_ RD_WR_FLAG	Reserved						LINK-TIMER _WRITE_ DONE	LINKTIMER_ READ_ VALID
LINK_TIMER_AD_JUST _PLUS	LINKTIMER_ADJUST_PLUS[7:0]							
LINK_TIMER_AD_JUST _MINUS	LINKTIMER_ADJUST_MINUS[7:0]							
SLOTTIMER_WR_RD	Reserved		SLOT_TIMER_WR_RD[5:0]					

USB Registers	7	6	5	4	3	2	1	0
MCNTRL	Reserved			HOS	NAT	HALT	Reserved	USBEN
FAR	AD_EN	AD[6:0]						
NFSR	Reserved						NSF[1:0]	
MAEV	INTR	RX_EV	ULD	NAK	FRAME	TX_EV	ALT	WARN
MAMSK	INTR	RX_EV	ULD	NAK	FRAME	TX_EV	ALT	WARN
ALTEV	RESUME	RESET	SD5	SD3	EOP	DMA	CLKSTB	Reserved
ALTMSK	RESUME	RESET	SD5	SD3	EOP	DMA	CLKSTB	Reserved
TXEV	TXUDRRUN[3:0]				TXFIFO[3:0]			
TXMSK	TXUDRRUN[3:0]				TXFIFO[3:0]			
RXEV	RXOVRRUN[3:0]				RXFIFO[3:0]			
RXMSK	RXOVRRUN[3:0]				RXFIFO[3:0]			

Obsolete

USB Registers	7	6	5	4	3	2	1	0
NAKEV	OUT[3:0]				IN[3:0]			
NAKMSK	OUT[3:0]				IN[3:0]			
FWEV	RXWARN[3:1]			Reserved	TXWARN[3:1]			Reserved
FWMSK	RXWARN[3:1]			Reserved	TXWARN[3:1]			Reserved
FNH	MF	UL	RFC	Reserved		FN[10:8]		
FNL	FN[7:0]							
DMACNTRL	DEN	IGNRXTGL	DTGL	ADMA	DMOD	DSRC[2:0]		
DMAEV	Reserved		NTGL	ARDY	DSIZ	DCNT	DERR	DSHLT
DMAMSK	Reserved				DSIZ	DCNT	DERR	DSHLT
MIR	STAT[7:0]							
DMACNT	DCOUNT[7:0]							
DMAERR	AEH	DMAERRCNT[6:0]						
EPC0	STALL	DEF	Reserved		EP[3:0]			
TXD0	TXFD[7:0]							
TXS0	Reserved	ACK_STAT	TX_DONE	TCOUNT[4:0]				
TXC0	Red			IGN_IN	FLUSH	TOGGLE	Reserved	TX_EN
RXD0	RXFD[7:0]							
RXS0	Res.	SETUP	TOGGLE	RX_LAST	RCOUNT[3:0]			
RXC0	Reserved				FLUSH	IGN_ SETUP	IGN_OUT	RX_EN
EPC1	STALL	Reserved	ISO	EP_EN	EP[3:0]			
TXD1	TXFD[7:0]							
TXS1	TX_URUN	ACK_STAT	TX_DONE	TCOUNT[4:0]				
TXC1	IGN_ ISOMSK	TFWL[1:0]		RFF	FLUSH	TOGGLE	LAST	TX_EN
EPC2	STALL	Reserved	ISO	EP_EN	EP[3:0]			
RXD1	RXFD[7:0]							
RXS1	RX_ERR	SETUP	TOGGLE	RX_LAST	RCOUNT[4:0]			
RXC1	Reserved	RFWL[1:0]		Res.	FLUSH	IGN_ SETUP	Reserved	RX_EN
EPC3	STALL	Reserved	ISO	EP_EN	EP[3:0]			
TXD2	TXFD[7:0]							
TXS2	TX_URUN	ACK_STAT	TX_DONE	TCOUNT[4:0]				
TXC2	IGN_ ISOMSK	TFWL[1:0]		RFF	FLUSH	TOGGLE	LAST	TX_EN
EPC4	STALL	Reserved	ISO	EP_EN	EP[3:0]			
RXD2	RXFD[7:0]							

Obsolete

USB Registers	7	6	5	4	3	2	1	0
RXS2	RX_ERR	SETUP	TOGGLE	RX_LAST	RCOUNT[4:0]			
RXC2	Reserved	RFWL[1:0]		Reserved	FLUSH	IGN_ SETUP	Reserved	RX_EN
EPC5	STALL	Reserved	ISO	EP_EN	EP[3:0]			
TXD3	TXFD[7:0]							
TXS3	TX_URUN	ACK_STAT	TX_DONE	TCOUNT[4:0]				
TXC3	IGN_ ISOMSK	TFWL[1:0]		RFF	FLUSH	TOGGLE	LAST	TX_EN
EPC6	STALL	Reserved	ISO	EP_EN	EP[3:0]			
RXD3	RXFD[7:0]							
RXS3	RX_ERR	SETUP	TOGGLE	RX_LAST	RCOUNT[4:0]			
RXC3	Reserved	RFWL[1:0]		Reserved	FLUSH	IGN_ SETUP	Reserved	RX_EN

DMAC Registers	20..16	15	14	13	12	11	10	9	8	7	6	5	4	3	2	1	0
ADCA	Device A Address Counter																
ADRA	Device A Address																
ADCB	Device B Address Counter																
ADRB	Device B Address																
BLTC	N/A	Block Length Counter															
BLTR	N/A	Block Length															
DMACNTL	N/A	Res.	INCB		ADB	INCA		ADA	SW RQ	Res.	OT	DIR	IND	TCS	EO VR	ETC	CH EN
DMASTAT	N/A									Reserved				VLD	CH AC	OVR	TC

System Configuration Registers	7	6	5	4	3	2	1	0
MCFG	Reserved	MEM_IO_ SPEED	MISC_IO_ SPEED	USB_ ENABLE	SCLKOE	MCLKOE	PLLCLKOE	EXIOE
DBGCFG	Reserved						FREEZE	ON
MSTAT	Reserved			DPGM BUSY	PGMBUSY	OENV2	OENV1	OENV0

Obsolete

BIU Registers	15	12	11	10	9	8	7	6	5	4	3	2	1	0
BCFG	Reserved													EWR
IOCFG	Reserved				IPST	Res.	BW	Reserved		HOLD		WAIT		
SZCFG0	Reserved		FRE	IPRE	IPST	Res.	BW	WBR	RBE	HOLD		WAIT		
SZCFG1	Reserved		FRE	IPRE	IPST	Res.	BW	WBR	RBE	HOLD		WAIT		
SZCFG2	Reserved		FRE	IPRE	IPST	Res.	BW	WBR	RBE	HOLD		WAIT		

TBI Register	7	6	5	4	3	2	1	0
TMODE	Reserved			TSTEN	ENMEM		TMSEL	

Flash Program Memory Interface Registers	15	14	13	12	11	10	9	8	7	6	5	4	3	2	1	0
FMIBAR	Reserved								IBA							
FMIBDR	IBD															
FM0WER	FM0WE[15:0]															
FM1WER	FM1WE[15:0]															
FM2WER	FM2WE[15:0]															
FM3WER	FM3WE[15:0]															
FMCTRL	Reserved								MER	PER	PE	IENPROG	DISVRF	Res.	CWD	LOWPRW
FMSTAT	Reserved											DERR	FMFULL	FMBUSY	PERR	EERR
FMPSR	Reserved											FTDIV[4:0]				
FMSTART	Reserved								FTSTART[7:0]							
FMTRAN	Reserved								FTTRAN[7:0]							
FMPROG	Reserved								FTPROG[7:0]							
FMPERASE	Reserved								FTPER[7:0]							
FMMERASE0	Reserved								FTMER[7:0]							
FMEND	Reserved								FTEND[7:0]							
FMMEND	Reserved								FTMEND[7:0]							
FMRCV	Reserved								FTRCV[7:0]							

Obsolete

Flash Program Memory Interface Registers	15	14	13	12	11	10	9	8	7	6	5	4	3	2	1	0
FMAR0	Reserved															Res.
FMAR1	WRPROT			RDPROT			ISPE			EMPTY			BOOTAREA			
FMAR2	CADR15:0															

Flash Data Memory Interface Registers	15	14	13	12	11	10	9	8	7	6	5	4	3	2	1	0
FSMIBAR	Reserved								IBA							
FSMIBDR	IBD															
FSM0WER	FM0WE[15:0]															
FSM1WER	FM1WE[15:0]															
FSM2WER	FM2WE[15:0]															
FSM3WER	FM3WE[15:0]															
FSMCTRL	Reserved								MER	PER	PE	IENP ROG	DIS VRF	Res.	CWD	LOW PRW
FSMSTAT	Reserved											DE RR	FM FULL	FM BUSY	PE RR	EE RR
FSMPSR	Reserved												FTDIV[3:0]			
FSMSTART	Reserved								FTSTART[7:0]							
FSMTRAN	Reserved								FTTRAN[7:0]							
FSMPROG	Reserved								FTPROG[7:0]							
FSMPERASE	Reserved								FTPER[7:0]							
FSMMERASE0	Reserved								FTMER[7:0]							
FSMEND	Reserved								FTEND[7:0]							
FSMMEND	Reserved								FTMEND[7:0]							
FSMRCV	Reserved								FTRCV[7:0]							
FSMAR0	Reserved															Res.
FSMAR1	WRPROT			RDPROT			ISPE			EMPTY			BOOTAREA			
FSMAR2	CADR15:0															

Obsolete

CVSD/PCM Registers	15	14	13	12	11	10	9	8	7	6	5	4	3	2	1	0
CVSDIN	CVSDIN															
CVSDOUT	CVSDOUT															
PCMIN	PCMIN															
PCMOUT	PCMOUT															
LOGIN	Reserved								LOGIN							
LOGOUT	Reserved								LOGOUT							
LINEARIN	LINEARIN															
LINEAROUT	LINEAROUT															
CVCTRL	Reserved				PCM CO NV	CVSD CONV		DMA PI	DMA PO	DMA CI	DMA CO	CVS DER RINT	CVS DINT	PCM INT	CLK EN	CV EN
CVSTAT	Reserved					CVOUTST			CVINST			CVF	CVE	PCM INT	CVN F	CV NE
CVTEST	Reserved											TEST _VAL	ENC _IN	DEC _EN	RT	TB
CVRADD	Reserved									CVRADD[6:0]						
CVRDAT	CVRDAT[15:0]															
CVDECOUT	CVDECOUT[15:0]															
CVENCIN	CVENCIN[15:0]															
CVENCPR	CVENCPRT[15:0]															

CLK3RES Registers	7	6	5	4	3	2	1	0
CRCTRL	Reserved		POR	ACE2	ACE1	PLLPWD	FCLK	SCLK
PRSFC	Reserved	MODE			FCDIV			
PRSSC	SCDIV							
PRSAC	ACDIV2				ACDIV1			

PMM Register	7	6	5	4	3	2	1	0
PMMCR	HCCH	HCCM	DHC	DMC	WBPSM	HALT	IDLE	PSM
PMMSR	Reserved					OHC	OMC	OLC

Obsolete

MIWU16 Registers	15 14	13 12	11 10	9 8	7 6	5 4	3 2	1 0
WKEDG	WKED							
WKENA	WKEN							
WKICTL1	WKINTR7	WKINTR6	WKINTR5	WKINTR4	WKINTR3	WKINTR2	WKINTR1	WKINTR0
WKICTL2	WKINTR15	WKINTR14	WKINTR13	WKINTR12	WKINTR11	WKINTR10	WKINTR9	WKINTR8
WKPND	WKPD							
WKPCL	WKCL							
WKIENA	WKIEN							

GPIO Registers	7	6	5	4	3	2	1	0
PxALT	Px Pins Alternate Function Enable							
PxDIR	Px Port Direction							
PxDIN	Px Port Output Data							
PxDOUT	Px Port Input Data							
PxWPU	Px Port Weak Pull-Up Enable							
PxHDRV	Px Port High Drive Strength Enable							
PxALTS	Px Pins Alternate Function Source Selection							

AAI Registers	15	14	13	12	11	10	9	8	7	6	5	4	3	2	1	0
ARSR	ARSH								ARSL							
ATSR	ATSH								ATSL							
ARFR	ARFH								ARFL							
ARDR0	ARDH								ARDL							
ARDR1	ARDH								ARDL							
ARDR2	ARDH								ARDL							
ARDR3	ARDH								ARDL							
ATFR	ATFH								ARFL							
ATDR0	ATDH								ATDL							
ATDR1	ATDH								ATDL							
ATDR2	ATDH								ATDL							
ATDR3	ATDH								ATDL							
AGCR	CLK EN	AAI EN	IOM2	IFS	FSL[1:0]		CTF	CRF	IEBC	FSS	IEFS	SCS[1:0]		LPB	DWL	ASS

Obsolete

AAI Registers	15	14	13	12	11	10	9	8	7	6	5	4	3	2	1	0
AISCR	Reserved				TX EIC	TX IC	RX EIC	RX IC	TX EIP	TX IP	RX EIP	RX IP	TX EIE	TX IE	RX EIE	RX IE
ARSCR	RXFWM[3:0]				RXDSA[3:0]				RXSA[3:0]				RXO	RXE	RXF	RX AF
ATSCR	TXFWM[3:0]				TXDSA[3:0]				TXSA[3:0]				TXU	TXF	TXE	TXAE
ACCR	BCPRS[7:0]								FCPRS[6:0]							CSS
ADMACR	Reserved			ACO[1:0]		ACD{2:0]			TMD[3:0]				RMD[3:0]			

ICU Registers	15 . . . 12	11 . . . 8	7	6	5	4	3	2	1	0
IVCT	Reserved		0	0	INTVECT[5:0]					
ISTAT0	IST(15:0)									
ISTAT1	IST(31:16)									
IENAM0	IENA(15:0)									
IENAM1	IENA(31:16)									

UART Registers	7	6	5	4	3	2	1	0
UTBUF	UTBUF							
URBUF	URBUF							
UICTRL	UEEI	UERI	UETI	UEFCI	UCTS	UDCTS	URBF	UTBE
USTAT	Reserved	UXMIP	URB9	UBKD	UERR	UDOE	UFE	UPE
UFRS	Reserved	UPEN	UPSEL		UXB9	USTP	UCHAR	
UMDSL1	URTS	UFCE	UERD	UETD	UCKS	UBRK	UATN	UMOD
UBAUD	UDIV[7:0]							
UPSR	UPSC[4:0]					UDIV[10:8]		
UOVR	Reserved				UOVSR[3:0]			
UMDSL2	Reserved							USMD
USPOS	Reserved				USAMP[3:0]			

MWSPI16 Registers	15 . . . 9	8	7	6	5	4	3	2	1	0
MWDAT	MWDAT									
MWCTL1	SCDV	SCIDL	SCM	EIW	EIR	EIO	ECHO	MOD	MNS	MWEN
MWSTAT	Reserved							OVR	RBF	BSY

Obsolete

ACB Registers	7	6	5	4	3	2	1	0
ACBSDA	DATA							
ACBST	SLVSTP	SDAST	BER	NEGACK	STASTR	NMATCH	MASTER	XMIT
ACBCST	ARPMATCH	MATCHAF	TGSCL	TSDA	GMATCH	MATCH	BB	BUSY
ACBCTL1	STASTRE	NMINTE	GCMEN	ACK	Reserved	INTEN	STOP	START
ACBADDR	SAEN	ADDR						
ACBCTL2	SCLFRQ[6:0]							ENABLE
ACBADDR2	SAEN	ADDR						
ACBCTL3	Reserved					ARPEN	SCLFRQ[8:7]	

TWM Registers	15 . . . 8	7	6	5	4	3	2	1	0
TWCFG	Reserved	Reserved		WDSDME	WDCT0I	LWDCNT	LTWMT0	LTWCP	LTWCFG
TWCP	Reserved	Reserved					MDIV		
TWMT0	PRESET								
T0CSR	Reserved	Reserved			FRZT0E	WDTLD	T0INTE	TC	RST
WDCNT	Reserved	PRESET							
WDSDM	Reserved	RSTDATA							

MFT16 Registers	15 . . . 8	7	6	5	4	3	2	1	0
TCNT1	TCNT1								
TCRA	TCRA								
TCRB	TCRB								
TCNT2	TCNT2								
TPRSC	Reserved	Reserved			CLKPS				
TCKC	Reserved	Reserved		C2CSEL			C1CSEL		
TCTRL	Reserved	TEN	TAOUT	TBEN	TAEN	TBEDG	TAEDG	TMDSEL	
TICTL	Reserved	TDIEN	TCIEN	TBIEN	TAIEN	TDPND	TCPND	TBPND	TAPND
TICLR	Reserved	Reserved				TDCLR	TCCLR	TBCLR	TACLR

Obsolete

VTU Registers	15	14	13	12	11	10	9	8	7	6	5	4	3	2	1	0
MODE	TMOD4		T8 RUN	T7 RUN	TMOD3		T6 RUN	T5 RUN	TMOD2		T4 RUN	T3 RUN	TMOD1		T2 RUN	T1 RUN
IO1CTL	P4 POL	C4EDG			P3 POL	C3EDG			P2 POL	C2EDG			P1 POL	C1EDG		
IO2CTL	P7 POL	C7EDG			P6 POL	C6EDG			P5 POL	C5EDG			P5 POL	C5EDG		
INTCTL	I4DEN	I4CEN	I4BEN	I4AEN	I3DEN	I3CEN	I3BEN	I3AEN	I2DEN	I2CEN	I2BEN	I2AEN	I1DEN	I1CEN	I1BEN	I1AEN
INTPND	I4DPD	I4CPD	I4BPD	I4APD	I3DPD	I3CPD	I3BPD	I3APD	I2DPD	I2CPD	I2BPD	I2APD	I1DPD	I1CPD	I1BPD	I1APD
CLK1PS	C2PRSC								C1PRSC							
COUNT1	CNT1															
PERCAP1	PCAP1															
DTYCAP1	DCAP1															
COUNT2	CNT2															
PERCAP2	PCAP2															
DTYCAP2	DCAP2															
CLK2PS	C4PRSC								C3PRSC							
COUNT3	CNT3															
PERCAP3	PCAP3															
DTYCAP3	DCAP3															
COUNT4	CNT4															
PERCAP4	PCAP4															
DTYCAP4	DCAP4															

Obsolete

27.0 Electrical Characteristics

27.1 ABSOLUTE MAXIMUM RATINGS

If Military/Aerospace specified devices are required, please contact the National Semiconductor Sales Office/Distributors for availability and specifications.

Supply voltage (VCC)	3.6V
All input and output voltages with respect to GND*	-0.5V to IOVCC + 0.5V
ESD protection level	2 kV (Human Body Model)
Allowable sink/source current per signal pin	±10 mA
Total current into IOVCC pins	200 mA
Total current into VCC pins (source)	200 mA
Total current out of GND pins (sink)	200 mA
Latch-up immunity	±200 mA
Storage temperature range	-65°C to +150°C

*Note: Absolute maximum ratings indicate limits beyond which damage to the device may occur. DC and AC electrical specifications are not ensured when operating the device at absolute maximum ratings. *The latch-up tolerance on ACCESS.bus pins exceeds 150 mA.*

27.2 DC ELECTRICAL CHARACTERISTICS (Temperature: -40°C ≤ T_A ≤ +85°C)

Symbol	Parameter	Conditions	Min	Max	Units
Vcc	Digital Logic Supply Voltage		2.25	2.75	V
IOVcc	I/O Supply Voltage		2.25	3.63	V
AVcc	Analog PLL Supply Voltage		2.25	2.75	V
UVcc	USB Transceiver Power Supply		2.97	3.63	V
V_{IL}	Logical 0 Input Voltage (except X2CKI)		-0.5 [a]	0.3 Vcc	V
V_{IH}	Logical 1 Input Voltage (except X2CKI)		0.7 IOVcc	IOVcc + 0.5 [a]	V
Vxl1	X1CKI Low Level Input Voltage	External X1 clock	-0.5 [a]	0.3 Vcc	V
Vxh1	X1CKI High Level Input Voltage OSC	External X1 clock	0.7 Vcc	Vcc + 0.5	V
Vxl2	X2CKI Logical 0 Input Voltage	External X2 clock	-0.5 [a]	0.6	V
Vxh2	X2CKI Logical 1 Input Voltage	External X2 clock	0.7 Vcc	Vcc + 0.5	V
V_{hys}	Hysteresis Loop Width [a]		0.1 IOVcc		V
I_{OH}	Logical 1 Output Current	V_{OH} = 1.8V, IOVcc = 2.25V	-1.6		mA
I_{OL}	Logical 0 Output Current	V_{OL} = 0.45V, IOVcc = 2.25V	1.6		mA
I_{OLACB}	SDA, SCL Logical 0 Output Current	V_{OL} = 0.4V, IOVcc = 2.25V	3.0		mA
I_{OHW}	Weak Pull-up Current	V_{OH} = 1.8V, IOVcc =2.25V	-10		µA
I_{IL}	$\overline{RESET}$ pin Weak Pull-down Current	V_{IL} = 0.45V, IOVcc = 2.25V		0.4	µA
I_L	High Impedance Input Leakage Current	0V ≤ Vin ≤ IOVcc	-2.0	2.0	µA
$I_{O(Off)}$	Output Leakage Current (I/O pins in input mode)	0V ≤ Vout ≤ Vcc	-2.0	2.0	µA
Icca1	Digital Supply Current Active Mode [b]	Vcc = 2.75V, IOVcc = 3.63V		12	mA
Icca2	Digital Supply Current Active Mode [c]	Vcc = 2.75V, IOVcc = 3.63V		8	mA

Obsolete

Symbol	Parameter	Conditions	Min	Max	Units
Iccprog	Digital Supply Current Active Mode [d]	Vcc = 2.75V, IOVcc = 3.63V		15	mA
Iccps	Digital Supply Current Power Save Mode [e]	Vcc = 2.75V, IOVcc = 3.63V		4.0	mA
Iccid	Digital Supply Current Idle Mode [f]	Vcc = 2.75V, IOVcc = 3.63V		950	µA
Iccq	Digital Supply Current Halt Mode [f,g,h]	Vcc = 2.75V, IOVcc = 3.63V		700	µA

a. Guaranteed by design

b. Test code executing from internal RAM. No peripheral blocks other than PLL and Auxiliary Clock enabled. X1CLKI is 24 MHz. Not programming Flash memory. Typical applications will show 16 mA (Icca1 + 4 mA) at 24 MHz executing code from flash memory.

c. Waiting for interrupt on executing WAIT instruction, Iout = 0 mA, X1CKI = 12 MHz, PLL enabled (4×), internal system clock is 24 MHz, not programming Flash memory

d. Same conditions as Icca1, but programming or erasing Flash memory page

e. Running from internal memory (RAM), Iout = 0 mA, XCKI1 = 12 MHz, PLL disabled, X2CKI = 32.768 kHz, device put in power-save mode, Slow Clock derived from XCKI1

f. Iout = 0 mA, XCKI1 = off, X2CKI = 32.768 kHz

g. USB switched off (suspend)

h. Halt current approximately doubles for every 20°C.

27.3 USB TRANSCEIVER ELECTRICAL CHARACTERISTICS (Temperature: -40°C ≤ T_A ≤ +85°C)

Symbol	Parameter	Conditions	Min	Max	Units
V_{DI}	Differential Input Sensitivity	(D+) - (D-)	-0.2	0.2	V
V_{CM}	Differential Common Mode Range		0.8	2.5	V
V_{SE}	Single-Ended Receiver Threshold		0.8	2.0	V
V_{OL}	Output Low Voltage	R_L = 1.5K ohm to 3.6V		0.3	V
V_{OH}	Output High Voltage		2.8		V
V_{OZ}	TRI-STATE Data Line Leakage	0V < V_{IN} < 3.3V	-10	10	µA
C_{TRN}	Transceiver Capacitance			20	pF

Obsolete

27.4 FLASH MEMORY ON-CHIP PROGRAMMING

Symbol	Parameter	Conditions	Min	Max	Units
t_{START}	Program/Erase to NVSTR Setup Time[a] (NVSTR = Non-Volatile Storage		5	-	µs
t_{TRAN}	NVSTR to Program Setup Time[b]		10	-	µs
t_{PROG}	Programming Pulse Width[c]		20	40	µs
t_{PERASE}	Page Erase Pulse Width[d]		20	-	ms
t_{MERASE}	Module Erase Pulse Width[e]		200	-	ms
t_{END}	NVSTR Hold Time[f]		5	-	µs
t_{MEND}	NVSTR Hold Time (Module Erase)[g]		100	-	µs
t_{RCV}	Recovery Time[h]		1	-	µs
t_{HV}	Cumulative Program High Voltage Period For Each Row After Erase[i]	128K program blocks	-	8	ms
t_{HV}		8K data block	-	4	ms
	Write/Erase Endurance		20,000	-	cycles
	Data Retention	25°C	100	-	years

a. Program/erase to NVSTR Setup Time is determined by the following equation:
$t_{START} = T_{clk} \times (FTDIV + 1) \times (FTSTART + 1)$, where T_{clk} is the System Clock period, FTDIV is the contents of the FMPSR or FSMPSR register, and FTSTART is the contents of the FMSTART or FSMSTART register

b. NVSTR to Program Setup Time is determined by the following equation:
$t_{TRAN} = T_{clk} \times (FTDIV + 1) \times (FTTRAN + 1)$, where T_{clk} is the System Clock period, FTDIV is the contents of the FMPSR or FSMPSR register, and FTTRAN is the contents of the FMTRAN or FSMTRAN register

c. Programming Pulse Width is determined by the following equation:
$t_{PROG} = T_{clk} \times (FTDIV + 1) \times 8 \times (FTPROG + 1)$, where T_{clk} is the System Clock period, FTDIV is the contents of the FMPSR or FSMPSR register, and FTPROG is the contents of the FMPROG or FSMPROG register

d. Page Erase Pulse Width is determined by the following equation:
$t_{PERASE} = T_{clk} \times (FTDIV + 1) \times 4096 \times (FTPER + 1)$, where T_{clk} is the System Clock period, FTDIV is the contents of the FMPSR or FSMPSR register, and FTPER is the contents of the FMPERASE or FSMPERASE register

e. Module Erase Pulse Width is determined by the following equation:
$t_{MERASE} = T_{clk} \times (FTDIV + 1) \times 4096 \times (FTMER + 1)$, where T_{clk} is the System Clock period, FTDIV is the contents of the FMPSR or FSMPSR register, and FTMER is the contents of the FMMERASE0 or FSMMERASE0 register

f. NVSTR Hold Time is determined by the following equation:
$t_{END} = T_{clk} \times (FTDIV + 1) \times (FTEND + 1)$, where T_{clk} is the System Clock period, FTDIV is the contents of the FMPSR or FSMPSR register, and FTEND is the contents of the FMEND or FSMEND register

g. NVSTR Hold Time (Module Erase) is determined by the following equation:
$t_{MEND} = T_{clk} \times (FTDIV + 1) \times 8 \times (FTMEND + 1)$, where T_{clk} is the System Clock period, FTDIV is the contents of the FMPSR or FSMPSR register, and FTMEND is the contents of the FMMEND or FSMMEND register

h. Recovery Time is determined by the following equation:
$t_{RCV} = T_{clk} \times (FTDIV + 1) \times (FTRCV + 1)$, where T_{clk} is the System Clock period, FTDIV is the contents of the FMPSR or FSMPSR register, and FTRCV is the contents of the FMRCV or FSMRCV register

i. Cumulative program high voltage period for each row after erase t_{HV} is the accumulated duration a flash cell is exposed to the programming voltage after the last erase cycle.

Obsolete

27.5 OUTPUT SIGNAL LEVELS

All output signals are powered by the digital supply (VCC).

Table 57 summarizes the states of the output signals during the reset state (when VCC power exists in the reset state) and during the Power Save mode.

The $\overline{\text{RESET}}$ and $\overline{\text{NMI}}$ input pins are active during the Power Save mode. In order to guarantee that the Power Save current not exceed 1 mA, these inputs must be driven to a voltage lower than 0.5V or higher than VCC - 0.5V. An input voltage between 0.5V and (VCC - 0.5V) may result in power consumption exceeding 1 mA.

Table 57 Output Pins During Reset and Power-Save

Signals on a Pin	Reset State (with Vcc)	Power Save Mode	Comments
PB7:0	TRI-STATE	Previous state	I/O ports will maintain their values when entering power-save mode
PC7:0	TRI-STATE	Previous state	
PG5, PG3:0	TRI-STATE	Previous state	
PH7:0	TRI-STATE	Previous state	
PI7:0	TRI-STATE	Previous state	

27.6 CLOCK AND RESET TIMING

Table 58 Clock and Reset Signals

Symbol	Figure	Description	Reference	Min (ns)	Max (ns)
Clock Input Signals					
t_{X1p}	72	X1 period	Rising Edge (RE) on X1 to next RE on X1	83.33	83.33
t_{X1h}	72	X1 high time, external clock	At 2V level (Both Edges)	(0.5 Tclk) - 5	
t_{X1l}	72	X1 low time, external clock	At 0.8V level (Both Edges)	(0.5 Tclk) - 5	
t_{X2p}	72	X2 period [a]	RE on X2 to next RE on X2	10,000	
t_{X2h}	72	X2 high time, external clock	At 2V level (both edges)	(0.5 Tclk) - 500	
t_{X2l}	72	X2 low time, external clock	At 0.8V level (both edges)	(0.5 Tclk) - 500	
t_{IH}	73	Input hold time ($\overline{\text{NMI}}$, RXD1, RXD2)	After RE on CLK	0	
Reset and NMI Input Signals					
t_{IW}	73	$\overline{\text{NMI}}$ Pulse Width	$\overline{\text{NMI}}$ Falling Edge (FE) to RE	20	
t_{RST}	74	$\overline{\text{RESET}}$ Pulse Width	$\overline{\text{RESET}}$ FE to RE	100	
t_R	74	Vcc Rise Time	0.1 Vcc to 0.9 Vcc		

a. Only when operating with an external square wave on X2CKI; otherwise a 32 kHz crystal network must be used between X2CKI and X2CKO. If Slow Clock is internally generated from Main Clock, it may not exceed this given limit.

obsolete

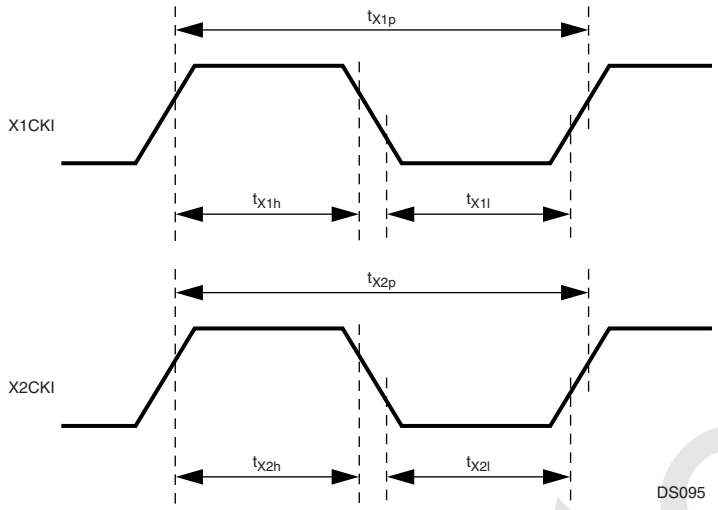

Figure 72. Clock Timing

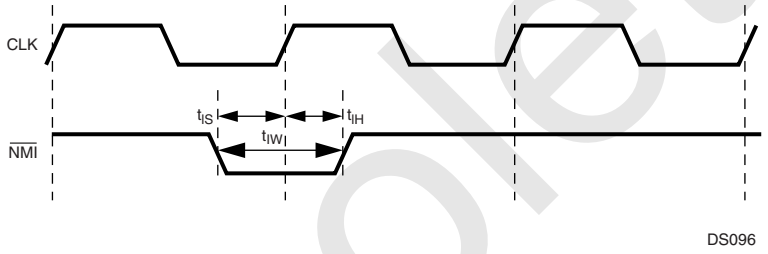

Figure 73. $\overline{\text{NMI}}$ Signal Timing

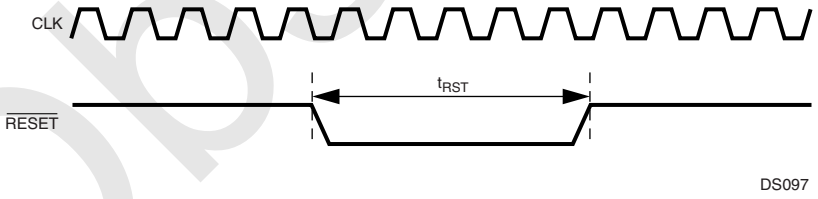

Figure 74. Non-Power-On Reset

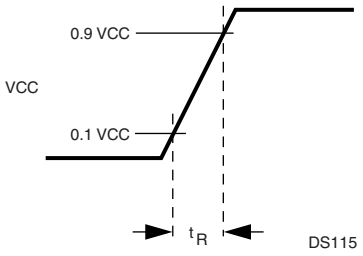

Figure 75. Power-On Reset

Obsolete

27.7 I/O PORT TIMING

Table 59 I/O Port Signals

Symbol	Figure	Description	Reference	Min (ns)	Max (ns)
I/O Port Input Signals					
t_{IS}	76	Input Setup Time	Before Falling Edge (FE) on System Clock	22.5	-
t_{IH}	76	Input Hold Time	After FE on System Clock	0	-
I/O Port Output Signals					
t_{COv1}	76	Output Valid Time	After FE on System Clock	-	3

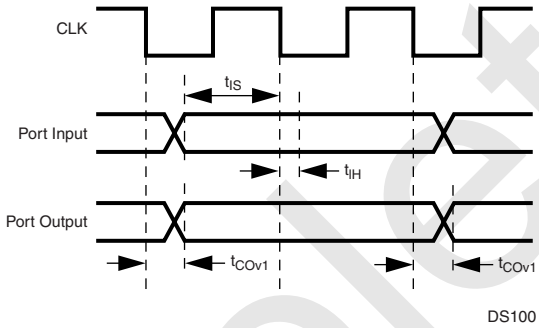

Figure 76. I/O Port Timing

Obsolete

27.8 ADVANCED AUDIO INTERFACE (AAI) TIMING

Table 60 Advanced Audio Interface (AAI) Signals

Symbol	Figure	Description	Reference	Min (ns)	Max (ns)
AAI Input Signals					
t_{RDS}	77,79	Receive Data Setup Time	Before Falling Edge (FE) on SRCLK	20	-
t_{RDH}	77,79	Receive Data Hold Time	After FE on SRCLK	20	-
t_{FSS}	77	Frame Sync Setup Time	Before Rising Edge (RE) on SRCLK	20	-
t_{FSH}	77	Frame Sync Hold Time	After RE on SRCLK	20	-
AAI Output Signals					
t_{CP}	77	Receive/Transmit Clock Period	RE on SRCLK/SCK to RE on SRCLK/SCK	976.6	-
t_{CL}	77	Receive/Transmit Low Time	FE on SRCLK/SCK to RE on SRCLK/SCK	488.3	-
t_{CH}	77	Receive/Transmit High Time	RE on SRCLK/SCK to FE on SRCLK/SCK	488.3	-
t_{FSVH}	77,79	Frame Sync Valid High	RE on SRCLK/SCK to RE on SRFS/SFS	-	20
t_{FSVL}	77,79	Frame Sync Valid Low	RE on SRCLK/SCK to FE on SRFS/SFS	-	20
t_{TDV}	78,80	Transmit Data Valid	RE on SCK to STD Valid	-	20

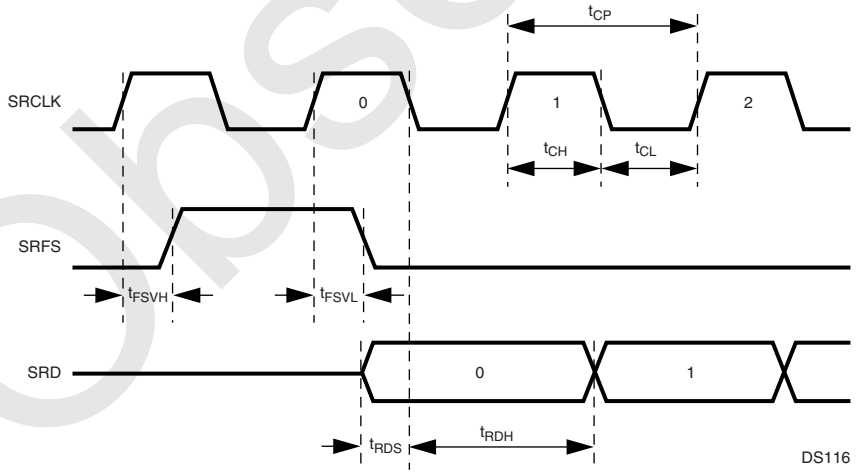

Figure 77. Receive Timing, Short Frame Sync

Obsolete

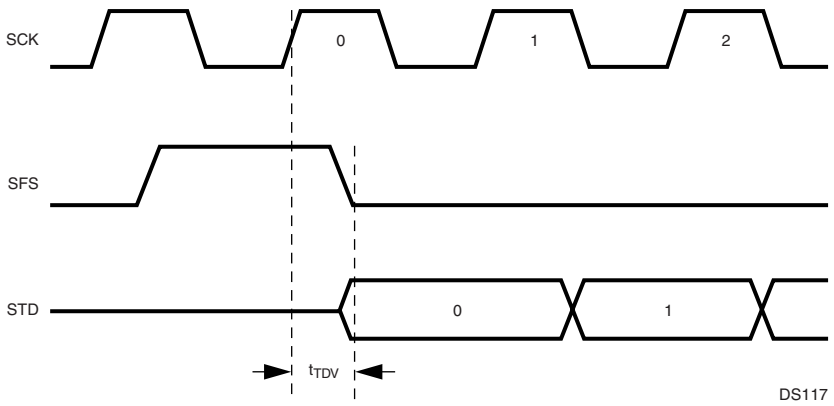

Figure 78. Transmit Timing, Short Frame Sync

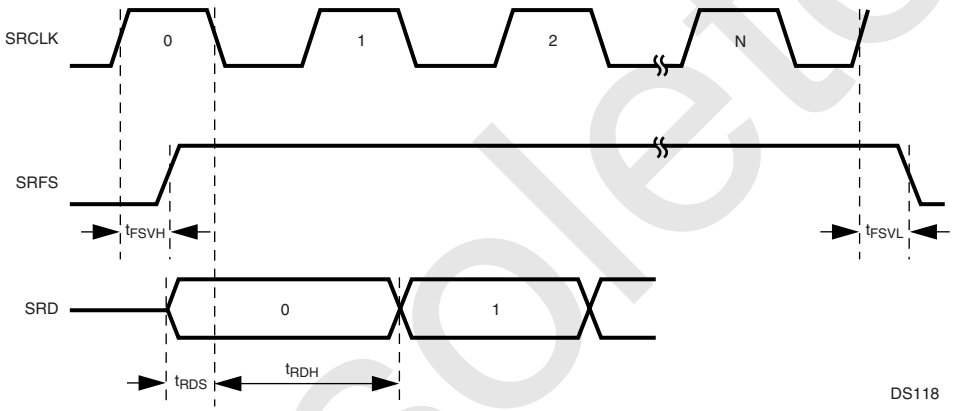

Figure 79. Receive Timing, Long Frame Sync

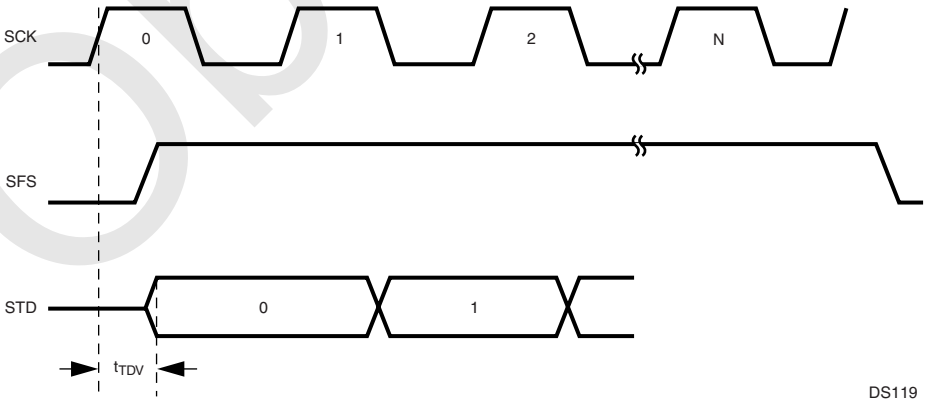

Figure 80. Transmit Timing, Long Frame Sync

Obsolete

27.9 MICROWIRE/SPI TIMING

Table 61 Microwire/SPI Signals

Symbol	Figure	Description	Reference	Min (ns)	Max (ns)
Microwire/SPI Input Signals					
t_{MSKh}	81	Microwire Clock High	At 2.0V (both edges)	80	-
t_{MSKl}	81	Microwire Clock Low	At 0.8V (both edges)	80	-
t_{MSKp}	81	Microwire Clock Period	SCIDL bit = 0; Rising Edge (RE) MSK to next RE MSK	200	-
	82		SCIDL bit = 1; Falling Edge (FE) MSK to next FE MSK		-
t_{MSKh}	81	MSK Hold (slave only)	After $\overline{MWCS}$ goes inactive	40	-
t_{MSKs}	81	MSK Setup (slave only)	Before $\overline{MWCS}$ goes active	80	-
t_{MCSh}	81	$\overline{MWCS}$ Hold (slave only)	SCIDL bit = 0; After FE MSK	40	-
	82		SCIDL bit = 1; After RE MSK		-
t_{MCSs}	81	$\overline{MWCS}$ Setup (slave only)	SCIDL bit = 0; Before RE MSK	80	-
	82		SCIDL bit = 1; Before FE MSK		-
t_{MDIh}	81	Microwire Data In Hold (master)	Normal Mode; After RE MSK	0	-
	83		Alternate Mode; After FE MSK		-
	81	Microwire Data In Hold (slave)	Normal Mode; After RE MSK	40	-
	83		Alternate Mode; After FE MSK		-
t_{MDIs}	81	Microwire Data In Setup	Normal Mode; Before RE MSK	80	-
	83		Alternate Mode; Before FE MSK		-
Microwire/SPI Output Signals					
t_{MSKh}	81	Microwire Clock High	At 2.0V (both edges)	40	-
t_{MSKl}	81	Microwire Clock Low	At 0.8V (both edges)	40	-
t_{MSKp}	81	Microwire Clock Period	SCIDL bit = 0: Rising Edge (RE) MSK to next RE MSK	100	-
	82		SCIDL bit = 1: Falling Edge (FE) MSK to next FE MSK		-
t_{MSKd}	81	MSK Leading Edge Delayed (master only)	Data Out Bit #7 Valid	0.5 t_{MSK}	1.5 t_{MSK}
t_{MDOf}	81	Microwire Data Float [b] (slave only)	After RE on $\overline{MCSn}$	-	25
t_{MDOh}	81	Microwire Data Out Hold	Normal Mode; After FE MSK	0.0	-
	82		Alternate Mode; After RE MSK		
t_{MDOnf}	85	Microwire Data No Float (slave only)	After FE on $\overline{MWCS}$	0	25

Obsolete

Table 61 Microwire/SPI Signals

Symbol	Figure	Description	Reference	Min (ns)	Max (ns)
t_{MDOv}	81	Microwire Data Out Valid	Normal Mode; After FE on MSK	-	25
			Alternate Mode; After RE on MSK		
t_{MITOp}	85	MDODI to MDIDO (slave only)	Propagation Time Value is the same in all clocking modes of the Microwire	-	25

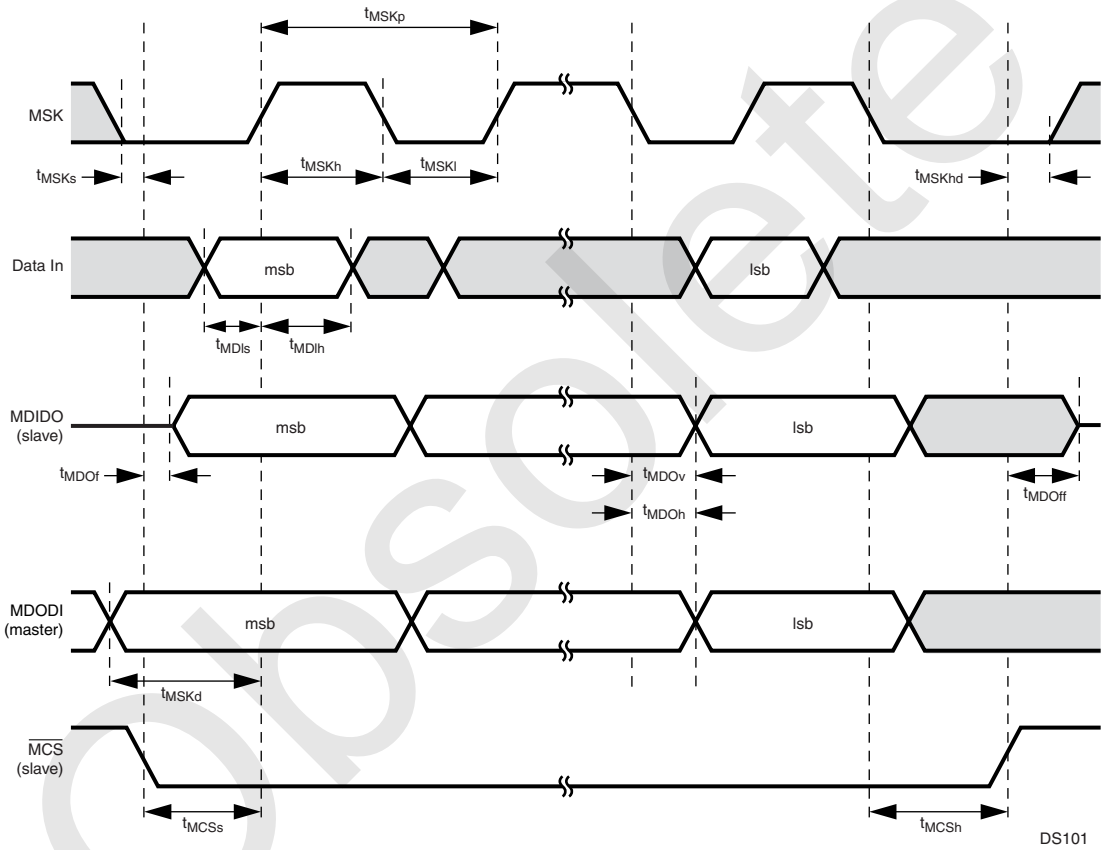

Figure 81. Microwire Transaction Timing, Normal Mode, SCIDL = 0

Obsolete

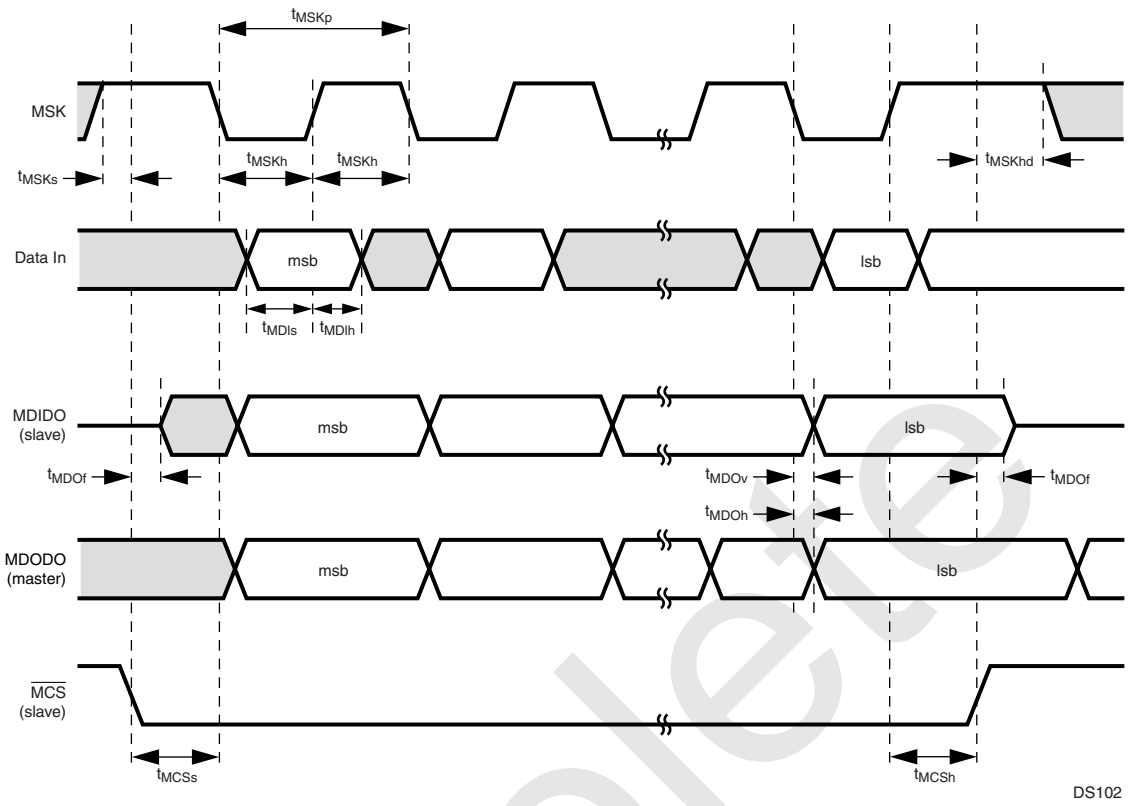

Figure 82. Microwire Transaction Timing, Normal Mode, SCIDL = 1

Obsolete

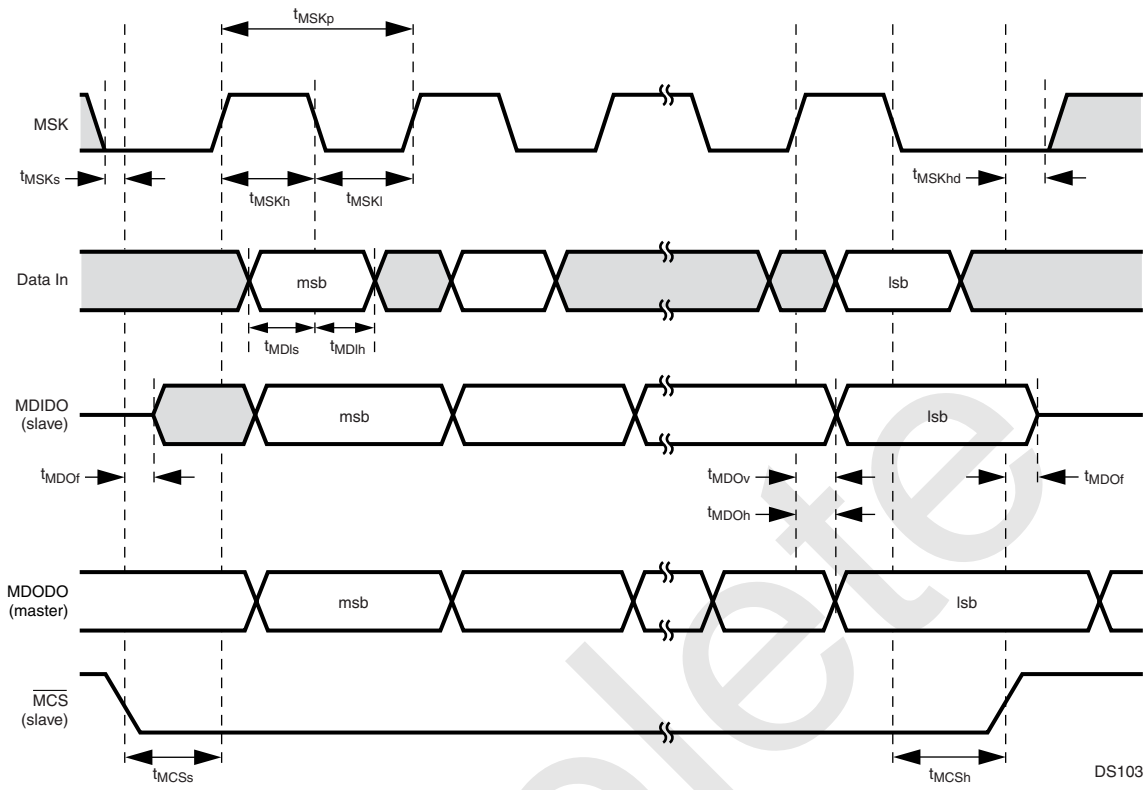

Figure 83. Microwire Transaction Timing, Alternate Mode, SCIDL = 0

Obsolete

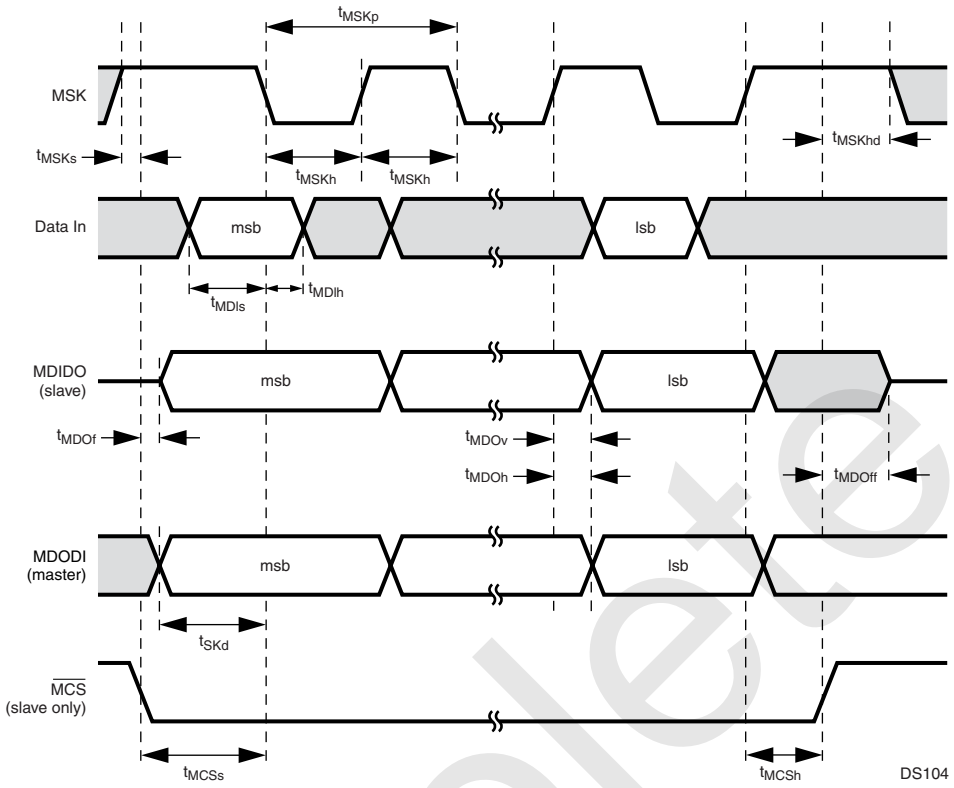

Figure 84. Microwire Transaction Timing, Alternate Mode, SCIDL = 1

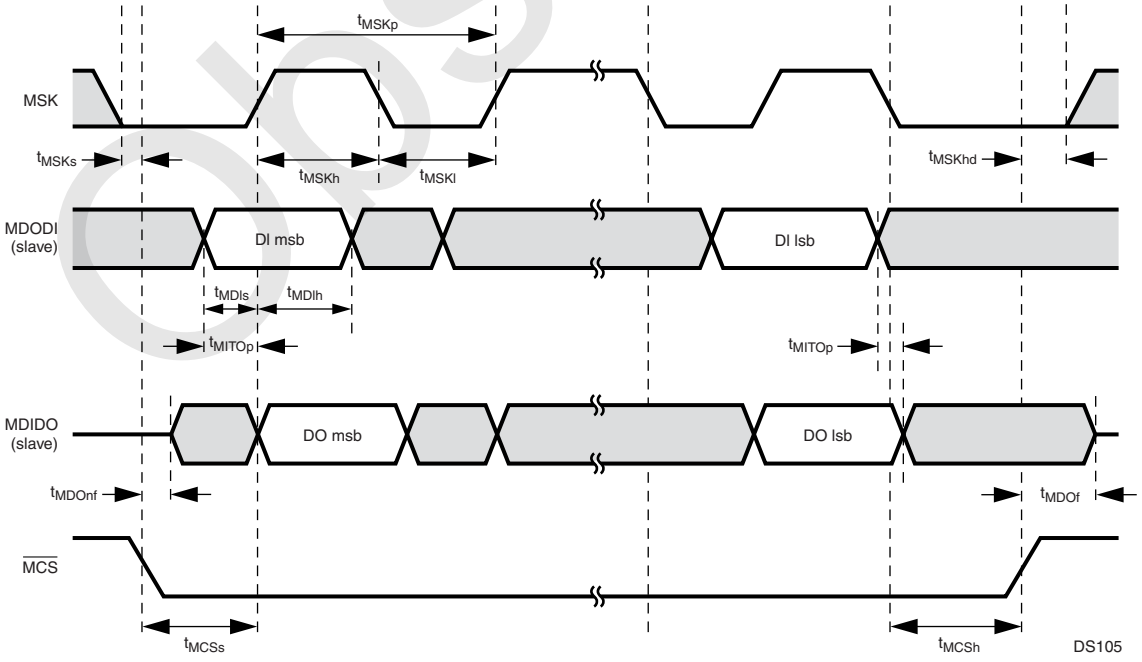

Figure 85. Microwire Transaction Timing, Data Echoed to Output, Normal Mode, SCIDL = 0, ECHO = 1, Slave Mode

Obsolete

27.10 ACCESS.BUS TIMING

Table 62 ACCESS.bus Signals

Symbol	Figure	Description	Reference	Min (ns)	Max (ns)
ACCESS.bus Input Signals					
t_{BUFi}	87	Bus free time between Stop and Start Condition		$t_{SCLhigho}$	-
t_{CSTOsi}	87	SCL setup time	Before Stop Condition	$(8 \times t_{CLK}) - t_{SCLri}$	-
t_{CSTRhi}	87	SCL hold time	After Start Condition	$(8 \times t_{CLK}) - t_{SCLri}$	-
t_{CSTRsi}	87	SCL setup time	Before Start Condition	$(8 \times t_{CLK}) - t_{SCLri}$	-
t_{DHCsi}	88	Data High setup time	Before SCL Rising Edge (RE)	$2 \times t_{CLK}$	-
t_{DLCsi}	87	Data Low setup time	Before SCL RE	$2 \times t_{CLK}$	-
t_{SCLfi}	86	SCL signal Rise time		-	300
t_{SCLri}	86	SCL signal Fall time		-	1000
$t_{SCLlowi}$	89	SCL low time	After SCL Falling Edge (FE)	$16 \times t_{CLK}$	-
$t_{SCLhighi}$	89	SCL high time	After SCL RE	$16 \times t_{CLK}$	-
t_{SDAfl}	86	SDA signal Fall time		-	300
t_{SDAri}	86	SDA signal Rise time		-	1000
t_{SDAhi}	89	SDA hold time	After SCL FE	0	-
t_{SDAsi}	89	SDA setup time	Before SCL RE	$2 \times t_{CLK}$	-
ACCESS.bus Output Signals					
t_{BUFo}	87	Bus free time between Stop and Start Condition		$t_{SCLhigho}$	-
t_{CSTOso}	87	SCL setup time	Before Stop Condition	$t_{SCLhigho}$	-
t_{CSTRho}	87	SCL hold time	After Start Condition	$t_{SCLhigho}$	-
t_{CSTRso}	88	SCL setup time	Before Start Condition	$t_{SCLhigho}$	-
t_{DHCso}	88	Data High setup time	Before SCL R.E.	$t_{SCLhigho} - t_{SDAro}$	-
t_{DLCso}	87	Data Low setup time	Before SCL R.E.	$t_{SCLhigho} - t_{SDAfo}$	-
t_{SCLfo}	86	SCL signal Fall time		-	300 [c]
t_{SCLro}	86	SCL signal Rise time		-	- [d]
$t_{SCLlowo}$	89	SCL low time	After SCL F.E.	$(K \times t_{CLK}) - 1$ [e]	-
$t_{SCLhigho}$	89	SCL high time	After SCL R.E.	$(K \times t_{CLK}) - 1$ [e]	-
t_{SDAfo}	86	SDA signal Fall time		-	300
t_{SDAro}	86	SDA signal Rise time		-	-
t_{SDAho}	89	SDA hold time	After SCL F.E.	$(7 \times t_{CLK}) - t_{SCLfo}$	-
t_{SDAvo}	89	SDA valid time	After SCL F.E.	-	$(7 \times t_{CLK}) + t_{RD}$

Obsolete

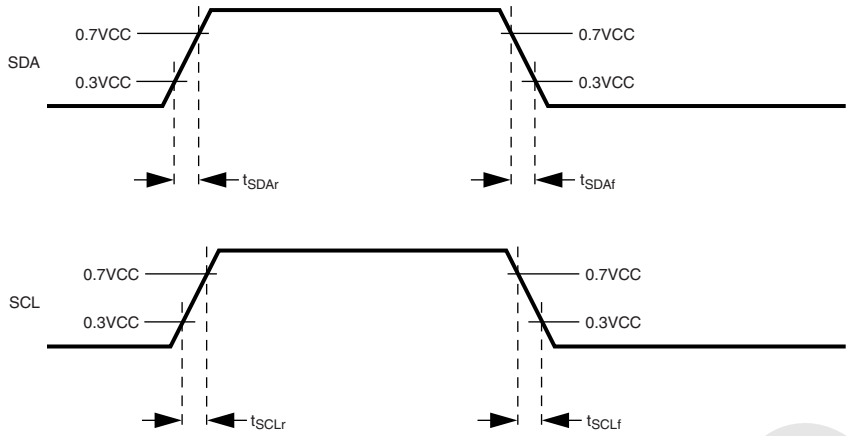

Note: In the timing tables the parameter name is added with an "o" for output signal timing and "i" for input signal timing.

DS106

Figure 86. ACB Signals (SDA and SCL) Timing

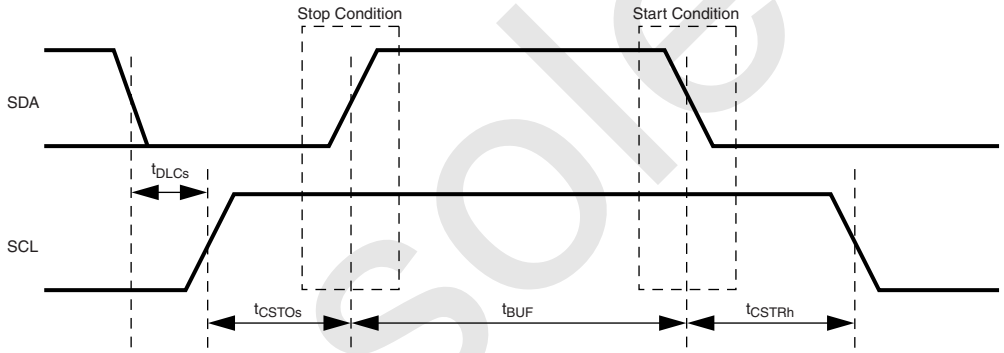

Note: In the timing tables the parameter name is added with an "o" for output signal timing and "i" for input signal timing. DS107

Figure 87. ACB Start and Stop Condition Timing

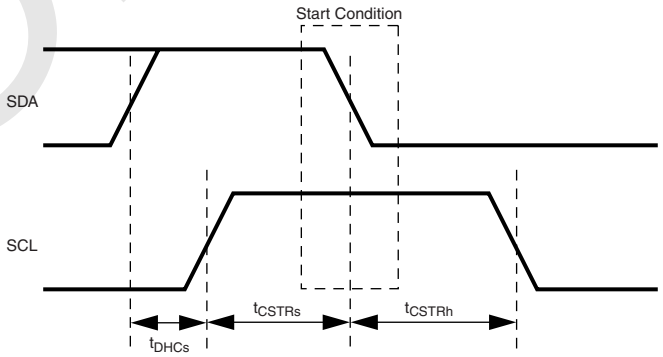

Note: In the timing tables the parameter name is added with an "o" for output signal timing and "i" for input signal timing.

DS108

Figure 88. ACB Start Condition Timing

Obsolete

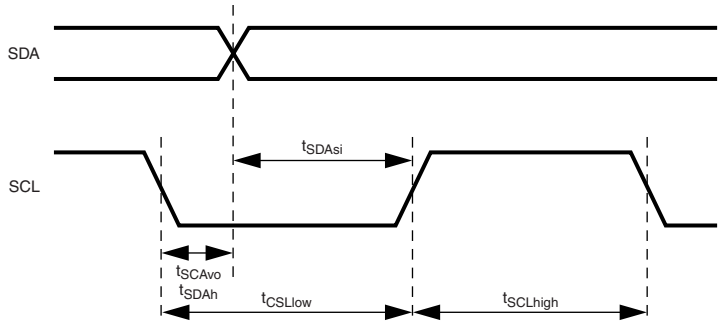

Note: In the timing tables the parameter name is added with an "o" for output signal timing and "i" for input signal timing. unless the parameter already includes the suffix.

DS109

Figure 89. ACB Data Timing

Obsolete

27.11 USB PORT AC CHARACTERISTICS

Table 63 USB Port Signals

Symbol	Description	Conditions[a]	Min	Typ	Max	Units
T_R	Rise Time	C_L = 50 pF	4		20	ns
T_F	Fall Time	C_L = 50 pF	4		20	ns
T_{RFM}	Fall/Rise Time Matching (T_R/T_F)	C_L = 50 pF	90		110	%
V_{CRS}	Output Signal Crossover Voltage	C_L = 50 pF	1.3		2.0	V
Z_{DRV}	Driver Output Impedance	C_L = 50 pF	28		43	ohms

a. Waveforms measured at 10% to 90%.

27.12 MULTI-FUNCTION TIMER (MFT) TIMING

Table 64 Multi-Function Timer Input Signals

Symbol	Figure	Description	Reference	Min (ns)	Max (ns)
t_{TAH}	90	TA High Time	Rising Edge (RE) on CLK	T_{CLK} + 5	
t_{TAL}	90	TA Low Time	RE on CLK	T_{CLK} + 5	

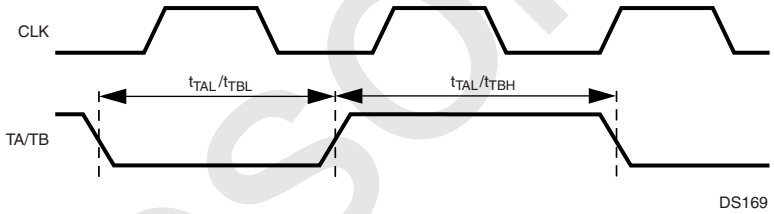

Figure 90. Multi-Function Timer Input Timing

Obsolete

27.13 VERSATILE TIMING UNIT (VTU) TIMING

Table 65 Versatile Timing Unit Input Signals

Symbol	Figure	Description	Reference	Min (ns)	Max (ns)
t_{TIOH}	90	TIOx Input High Time	Rising Edge (RE) on CLK	$1.5 \times T_{CLK} + 5ns$	
t_{TIOL}	90	TIOx Input Low Time	RE on CLK	$1.5 \times T_{CLK} + 5ns$	

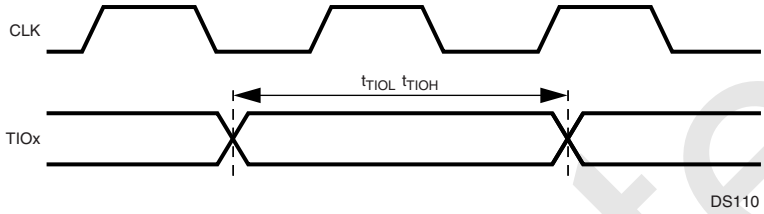

Figure 91. Versatile Timing Unit Input Timing

Obsolete

27.14 EXTERNAL BUS TIMING

Table 66 External Bus Signals

Symbol	Figure	Description	Reference	Min (ns)	Max (ns)
External Bus Input Signals					
t_1	92, 94, 95, 96	Input Setup Time D[15:0]	Before Rising Edge (RE) on CLK	8	-
t_2	92, 94, 95, 96	Output Hold Time D[15:0]	After RE on CLK	0	-
External Bus Output Signals					
t_3	92, 93	Output Valid Time D[15:0]	After RE on CLK	-	8
t_4	92, 93, 94, 95, 96	Output Valid Time A[21:0] (CP3BT10) A[22:0] (CP3BT13)	After RE on CLK	-	8
t_5	92, 93, 94, 95, 96	Output Active/Inactive Time $\overline{RD}$ $\overline{SEL[1:0]}$ $\overline{SELIO}$	After RE on CLK	-	8
t_6	92, 93	Output Active/Inactive Time $\overline{WR[1:0]}$	After RE on CLK	-	0.5 Tclk + 8
t_7	94	Minimum Inactive Time $\overline{RD}$	At 2.0V	Tclk - 4	-
t_8	92	Output Float Time D[15:0]	After RE on CLK	-	8
t_9	92	Minimum Delay Time	From $\overline{RD}$ Trailing Edge (TE) to D[15:0] driven	Tclk - 4	-
t_{10}	92, 93	Minimum Delay Time	From $\overline{RD}$ TE to $\overline{SELn}$ Leading Edge (LE)	0	-
t_{11}	93	Minimum Delay Time	From $\overline{SELx}$ TE to $\overline{SELy}$ LE	0	-
t_{12}	92, 93, 94, 95, 96	Output Hold Time A22 (CP3BT13 only) A[21:0] D[15:0] $\overline{RD}$ $\overline{SEL[2:0]}$ $\overline{SELIO}$	After RE on CLK	0	-
t_{13}	92, 93	Output Hold Time $\overline{WR[1:0]}$	After RE on CLK	0.5 Tclk - 3	-

Obsolete

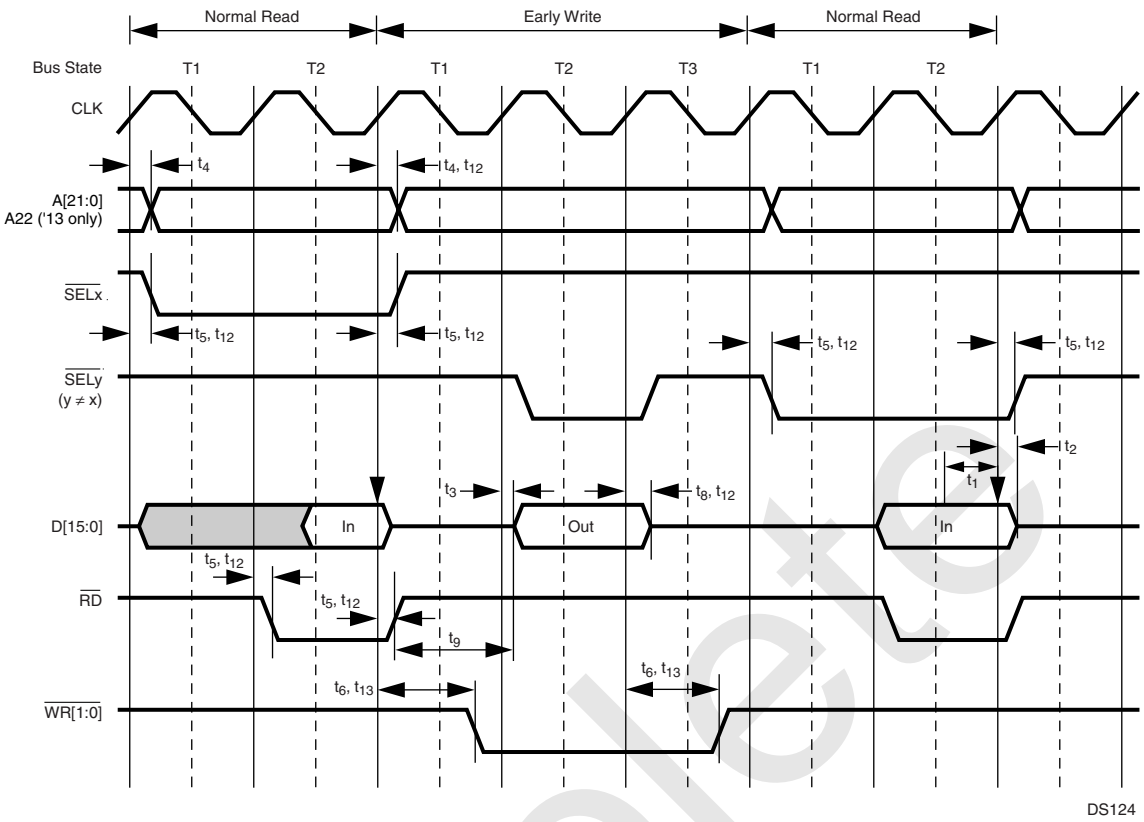

Figure 92. Early Write Between Normal Read Cycles (No Wait States)

Obsolete

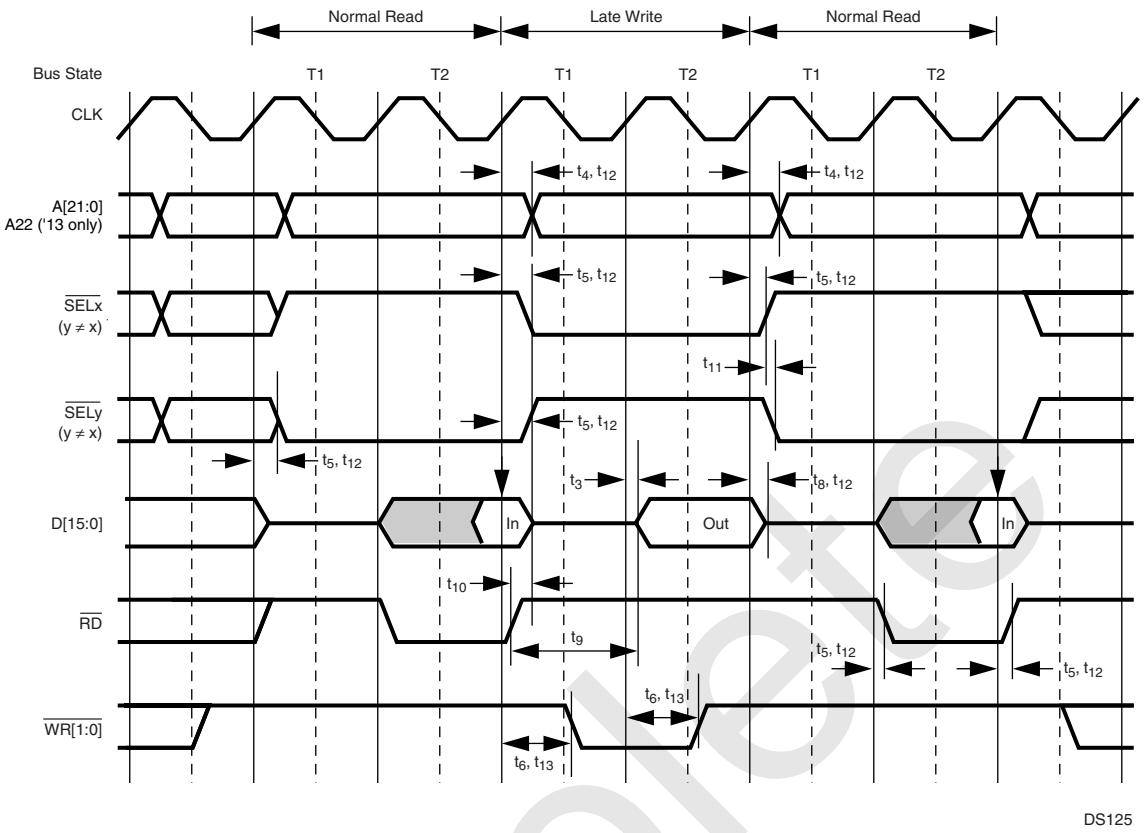

Figure 93. Late Write Between Normal Read Cycles (No Wait States)

Obsolete

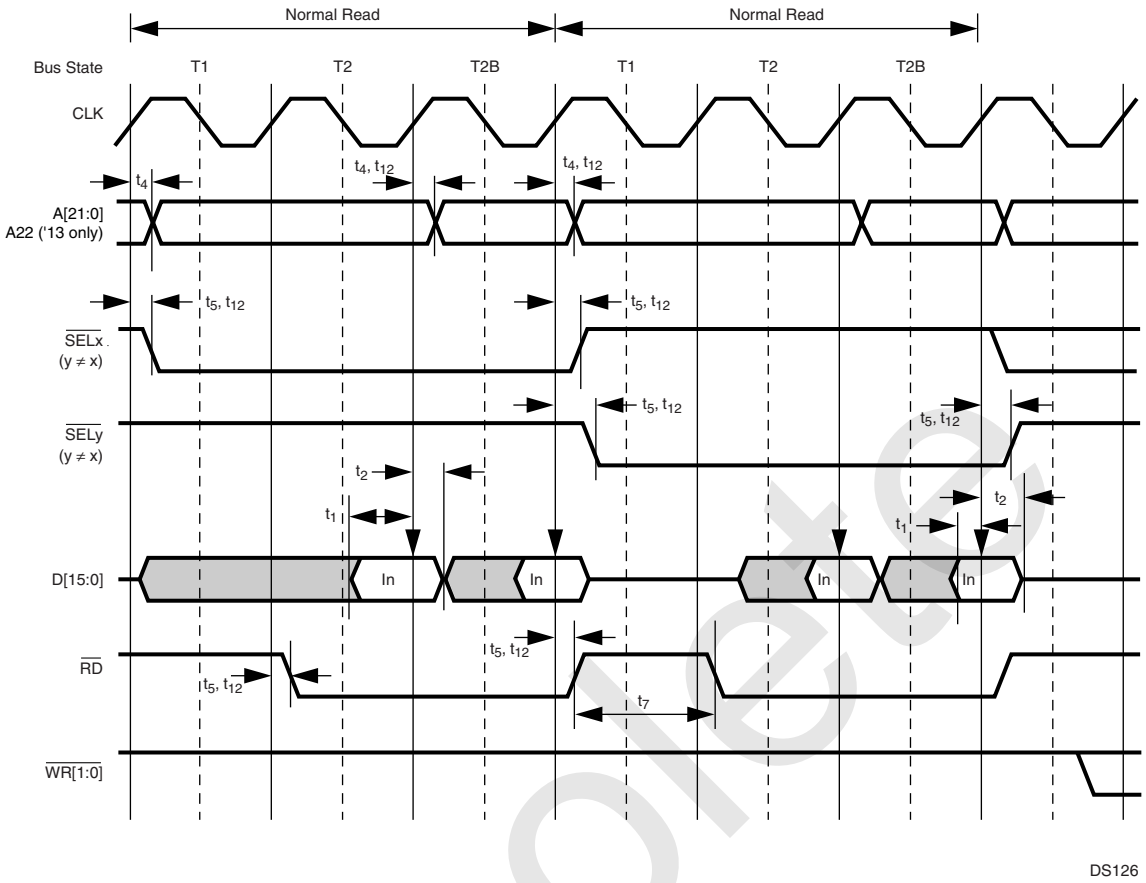

Figure 94. Consecutive Normal Read Cycles (Burst, No Wait States)

Obsolete

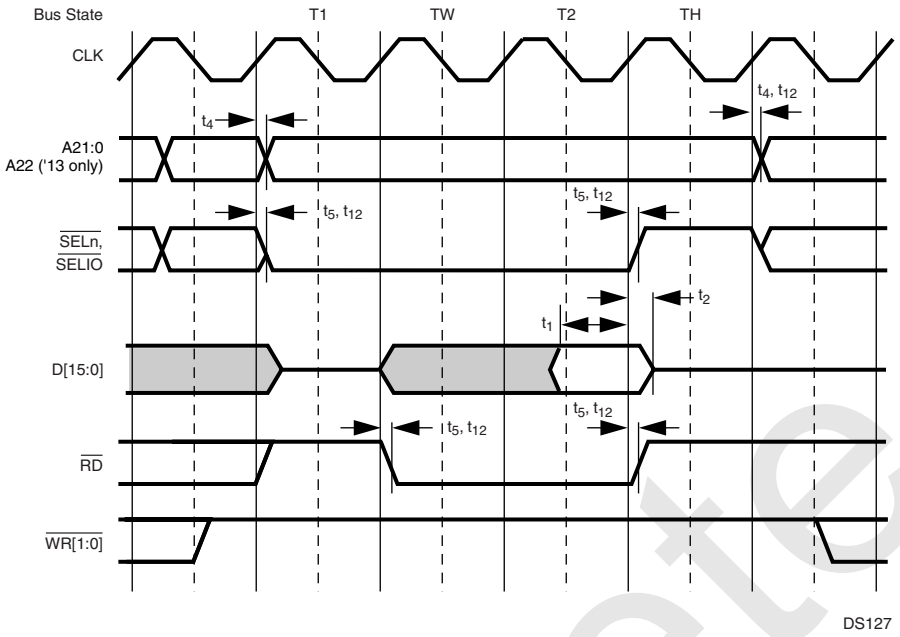

Figure 95. Normal Read Cycle (Wait Cycle Followed by Hold Cycle)

Obsolete

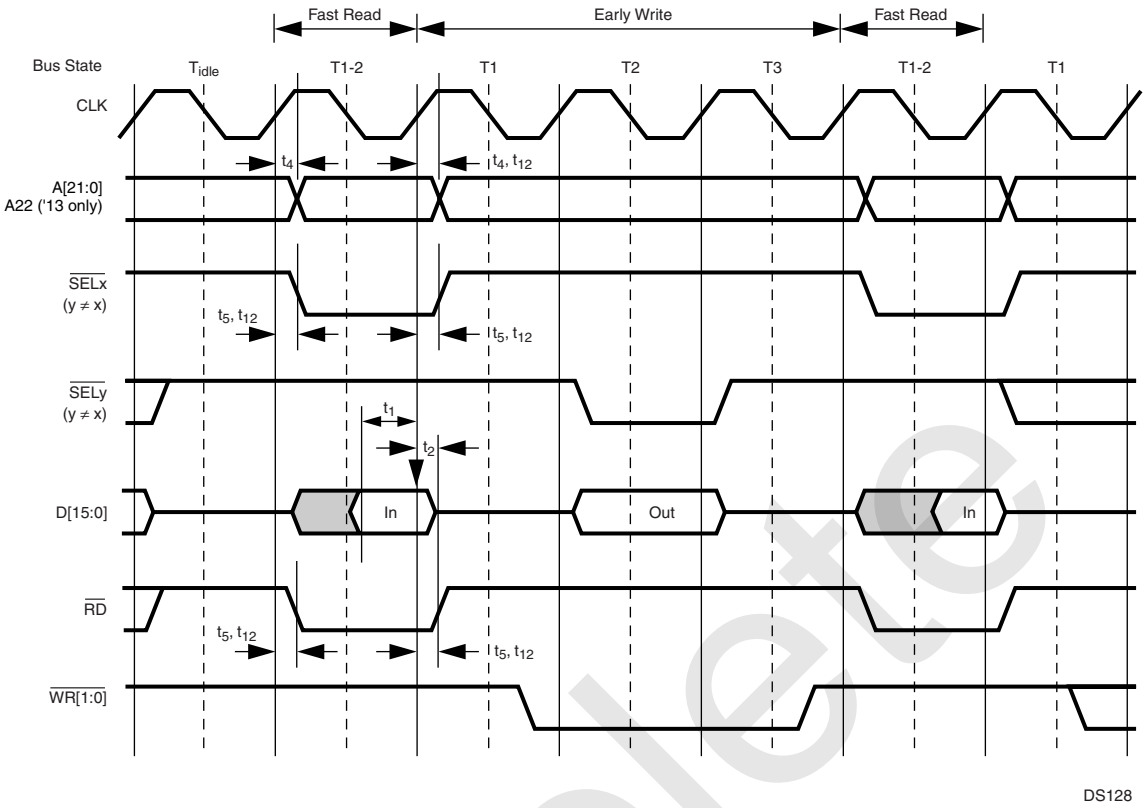

Figure 96. Early Write Between Fast Read Cycles

Obsolete

28.0 Pin Assignments

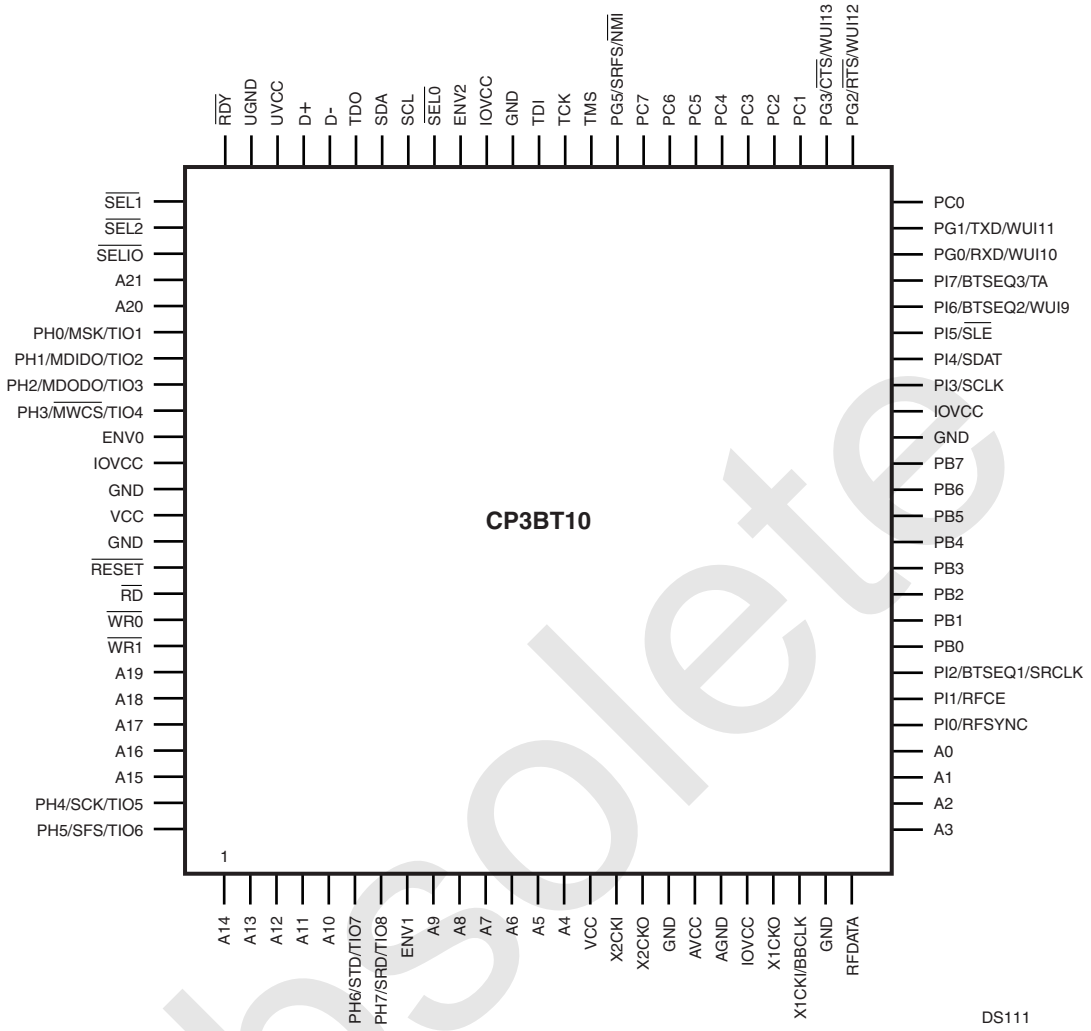

Figure 97. CP3BT10 in the 100-pin LQFP Package (Top View)

Obsolete

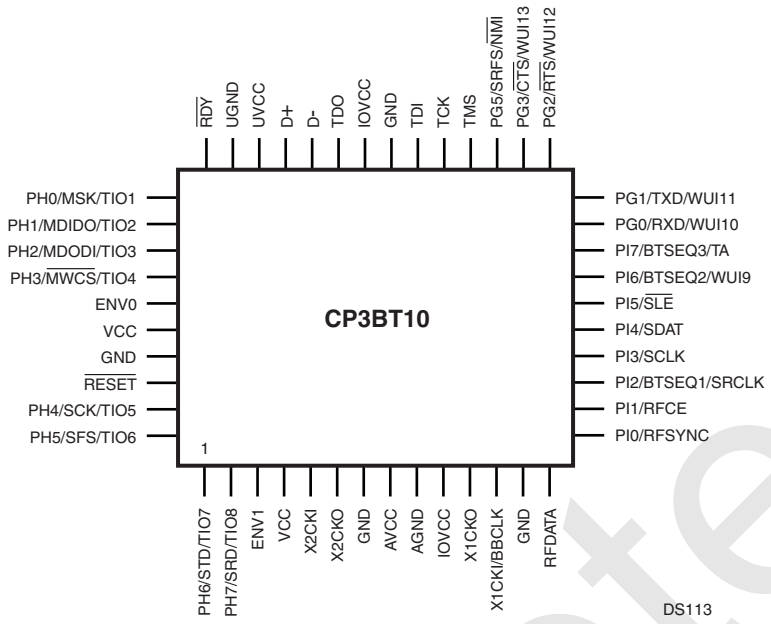

Figure 98. CP3BT10 in the 48-pin CSP Package (Top View)

Obsolete

29.0 Revision History

Table 67 Revision History

Date	Major Changes From Previous Version
8/5/02	Split the CP3BT10/CP3BT13 data sheet into separate data sheets for each chip. Added description of RDPROT field.
8/15/02	Clarified conditions for software DMA transfer request in Section 9.4. Removed commercial temperature range device.
9/26/02	Changed I/O Zone bus width to allow 8 bits. Removed UART synchronous mode.
10/8/02	Changed flash programming sequence to remove checking FMBUSY after each row.
10/16/02	Corrections to flash memory programming sequence and MFT block diagrams.
11/11/02	Numerous minor corrections. Added more description to AAI section. Added external reset circuit. Fixed problems with figures.
11/21/02	Converted to new data sheet format. Removed TB functionality from MFT section.
1/13/03	Removed erroneous warning to always write the IOCFG register with bit 1 set. Alternate clock source for Advanced Audio Interface changed to Aux1 clock. Changed warning about clock glitches to say Microwire interface must be disabled when modifying bits in MWCTL1 register. Changed bit settings which occur in step 2 of the sequence of ACCESS.bus slave mode address match or global match. Timer Mode Control Register bit 3 is reserved and bit 2 is TAEDG. Bit 7 is the TEN bit (a bit description has been added). Polarity of all of the bits in the INTCTL register has been inverted.
5/20/03	Updated DC specifications. Fixed errors in Microwire bit and pin names. Changed UART pin names to TXD and RXD. Added Section 11.6 “Auxiliary Clocks”. Changed diagram of I/O Port Pin Logic (Section 14).
11/14/03	Defined valid range of SCDV field in Microwire/SPI module. Noted default PRSSC register value generates a Slow Clock frequency slightly higher than 32768 Hz. Clarified usage of CVSTAT register bits and fields in CVSD/PCM module. Updated layout of Bluetooth LLC registers. Added usage hint for avoiding ACCESS.bus module bus error.

Table 67 Revision History (Continued)

Date	Major Changes From Previous Version
2/28/04	Changed NSID designations in the product selection guide. Updated Bluetooth section for LMX5251 and LMX5252 radio chips. Added BTSEQ[3:1] signals to pin descriptions, GPIO alternate functions, and package pin assignments. Changed CVSD Conversion section. Changed definition of the RESOLUTION field of the CVSD Control register (CVCTRL). Changed DC specification for Vxl2.
3/16/04	Changed LMX5251 interface circuit. Updated DC specifications Iccid and Iccq.
5/20/04	Moved revision history in front of physical dimensions. Changed back page disclaimers.
6/23/04	Changed absolute maximum supply voltage to 3.6V. Changed processor selection guide table.
7/3/04	Changed footnote b in DC specs. Changed product selection guide table.
7/16/04	Changed product selection guide table.
8/24/04	Added AC timing specifications for GPIO. Deleted AC timing section for UART.
9/7/04	In Section 17.2, added sentence that an external frame sync must be used in asynchronous mode. In Section 12, in several places noted that Idle and Halt modes may only be entered from Active mode, and the DHC and DMC bits must be set when entering Idle and Halt modes. Added usage hints Section 17.8. Removed Section 21.4.1.
4/4/05	Added new reset circuits. Added note about fluctuations in response due to SDI activity. New back page.

Obsolete

30.0 Physical Dimensions (millimeters) unless otherwise noted

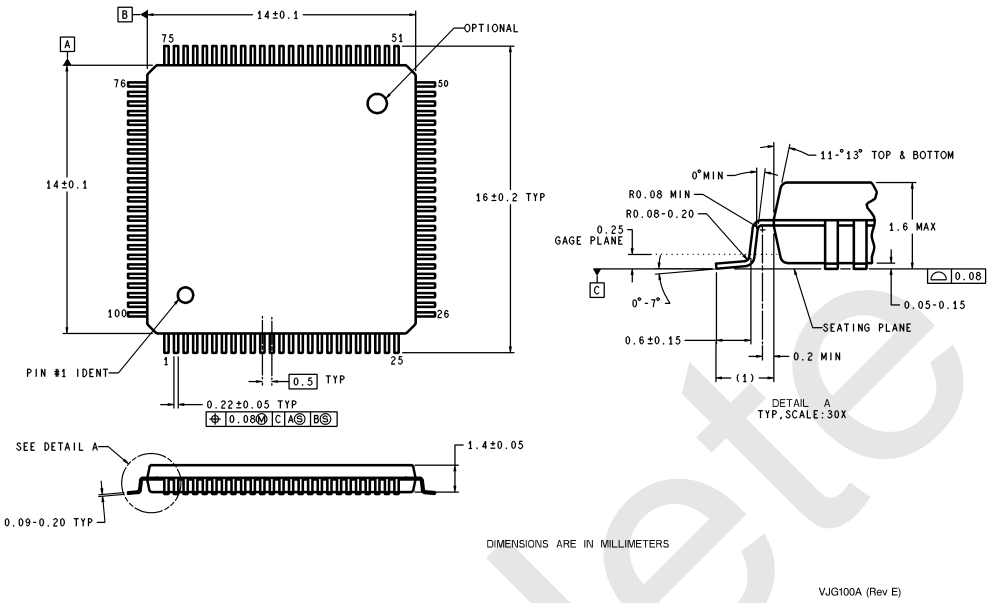

Figure 99. 100-Pin LQFP Package

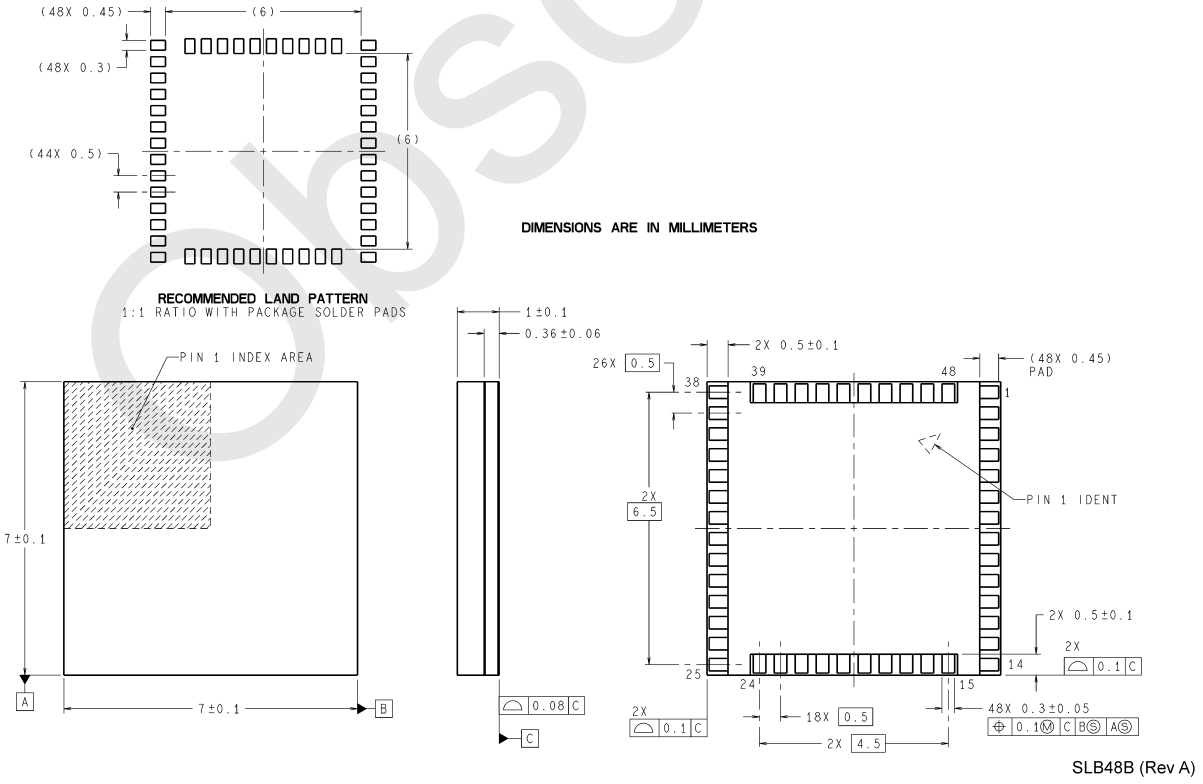

Figure 100. 48-Pin CSP Package

Obsolete

Obsolete

National does not assume any responsibility for use of any circuitry described, no circuit patent licenses are implied and National reserves the right at any time without notice to change said circuitry and specifications.

For the most current product information visit us at www.national.com.

LIFE SUPPORT POLICY

NATIONAL'S PRODUCTS ARE NOT AUTHORIZED FOR USE AS CRITICAL COMPONENTS IN LIFE SUPPORT DEVICES OR SYSTEMS WITHOUT THE EXPRESS WRITTEN APPROVAL OF THE PRESIDENT AND GENERAL COUNSEL OF NATIONAL SEMICONDUCTOR CORPORATION. As used herein:

1. Life support devices or systems are devices or systems which, (a) are intended for surgical implant into the body, or (b) support or sustain life, and whose failure to perform, when properly used in accordance with instructions for use provided in the labeling, can be reasonably expected to result in a significant injury to the user.
2. A critical component is any component of a life support device or system whose failure to perform can be reasonably expected to cause the failure of the life support device or system, or to affect its safety or effectiveness.

BANNED SUBSTANCE COMPLIANCE

National Semiconductor certifies that the products and packing materials meet the provisions of the Customer Products Stewardship Specification (CSP-9-111C2) and the Banned Substances and Materials of Interest Specification (CSP-9-111S2) and contain no "Banned Substances" as defined in CSP-9-111S2.

National Semiconductor Americas Customer Support Center
Email: new.feedback@nsc.com
Tel: 1-800-272-9959

National Semiconductor Europe Customer Support Center
Fax: +49 (0) 180-530 85 86
Email: europe.support@nsc.com
Deutsch Tel: +49 (0) 69 9508 6208
English Tel: +44 (0) 870 24 0 2171
Francais Tel: +33 (0) 1 41 91 8790

National Semiconductor Asia Pacific Customer Support Center
Email: ap.support@nsc.com

National Semiconductor Japan Customer Support Center
Fax: 81-3-5639-7507
Email: jpn.feedback@nsc.com
Tel: 81-3-5639-7560

www.national.com

IMPORTANT NOTICE

Texas Instruments Incorporated and its subsidiaries (TI) reserve the right to make corrections, modifications, enhancements, improvements, and other changes to its products and services at any time and to discontinue any product or service without notice. Customers should obtain the latest relevant information before placing orders and should verify that such information is current and complete. All products are sold subject to TI's terms and conditions of sale supplied at the time of order acknowledgment.

TI warrants performance of its hardware products to the specifications applicable at the time of sale in accordance with TI's standard warranty. Testing and other quality control techniques are used to the extent TI deems necessary to support this warranty. Except where mandated by government requirements, testing of all parameters of each product is not necessarily performed.

TI assumes no liability for applications assistance or customer product design. Customers are responsible for their products and applications using TI components. To minimize the risks associated with customer products and applications, customers should provide adequate design and operating safeguards.

TI does not warrant or represent that any license, either express or implied, is granted under any TI patent right, copyright, mask work right, or other TI intellectual property right relating to any combination, machine, or process in which TI products or services are used. Information published by TI regarding third-party products or services does not constitute a license from TI to use such products or services or a warranty or endorsement thereof. Use of such information may require a license from a third party under the patents or other intellectual property of the third party, or a license from TI under the patents or other intellectual property of TI.

Reproduction of TI information in TI data books or data sheets is permissible only if reproduction is without alteration and is accompanied by all associated warranties, conditions, limitations, and notices. Reproduction of this information with alteration is an unfair and deceptive business practice. TI is not responsible or liable for such altered documentation. Information of third parties may be subject to additional restrictions.

Resale of TI products or services with statements different from or beyond the parameters stated by TI for that product or service voids all express and any implied warranties for the associated TI product or service and is an unfair and deceptive business practice. TI is not responsible or liable for any such statements.

TI products are not authorized for use in safety-critical applications (such as life support) where a failure of the TI product would reasonably be expected to cause severe personal injury or death, unless officers of the parties have executed an agreement specifically governing such use. Buyers represent that they have all necessary expertise in the safety and regulatory ramifications of their applications, and acknowledge and agree that they are solely responsible for all legal, regulatory and safety-related requirements concerning their products and any use of TI products in such safety-critical applications, notwithstanding any applications-related information or support that may be provided by TI. Further, Buyers must fully indemnify TI and its representatives against any damages arising out of the use of TI products in such safety-critical applications.

TI products are neither designed nor intended for use in military/aerospace applications or environments unless the TI products are specifically designated by TI as military-grade or "enhanced plastic." Only products designated by TI as military-grade meet military specifications. Buyers acknowledge and agree that any such use of TI products which TI has not designated as military-grade is solely at the Buyer's risk, and that they are solely responsible for compliance with all legal and regulatory requirements in connection with such use.

TI products are neither designed nor intended for use in automotive applications or environments unless the specific TI products are designated by TI as compliant with ISO/TS 16949 requirements. Buyers acknowledge and agree that, if they use any non-designated products in automotive applications, TI will not be responsible for any failure to meet such requirements.

Following are URLs where you can obtain information on other Texas Instruments products and application solutions:

Products		**Applications**	
Audio	www.ti.com/audio	Communications and Telecom	www.ti.com/communications
Amplifiers	amplifier.ti.com	Computers and Peripherals	www.ti.com/computers
Data Converters	dataconverter.ti.com	Consumer Electronics	www.ti.com/consumer-apps
DLP® Products	www.dlp.com	Energy and Lighting	www.ti.com/energy
DSP	dsp.ti.com	Industrial	www.ti.com/industrial
Clocks and Timers	www.ti.com/clocks	Medical	www.ti.com/medical
Interface	interface.ti.com	Security	www.ti.com/security
Logic	logic.ti.com	Space, Avionics and Defense	www.ti.com/space-avionics-defense
Power Mgmt	power.ti.com	Transportation and Automotive	www.ti.com/automotive
Microcontrollers	microcontroller.ti.com	Video and Imaging	www.ti.com/video
RFID	www.ti-rfid.com		
OMAP Mobile Processors	www.ti.com/omap		
Wireless Connectivity	www.ti.com/wirelessconnectivity		

TI E2E Community Home Page e2e.ti.com

Mailing Address: Texas Instruments, Post Office Box 655303, Dallas, Texas 75265
Copyright © 2011, Texas Instruments Incorporated