Laird™
CONNECTIVITY

Datasheet

Sterling™ LWB5+

Version 1.0

REVISION HISTORY

Version	Date	Notes	Contributors	Approver
1.0	07 Dec 2020	Initial version	Andrew Chen	Jonathan Kaye

© Copyright 2020 Laird Connectivity, Inc.
All Rights Reserved
Americas: +1-800-492-2320
Europe: +44-1628-858-940
Hong Kong: +852 2923 0610

CONTENTS

1 Scope 4
2 Introduction 4
3 LWB5+ Series Features Summary 5
4 Specifications 6
5 WLAN Functional Description 11
6 Bluetooth Functional Description 13
7 Block Diagram 14
8 Electrical Characteristics 14
8.1 Absolute Maximum Ratings 14
8.2 Recommended Operating Conditions 15
8.3 DC Electrical Characteristics 15
8.4 WLAN Radio Receiver Characteristics 15
8.5 WLAN Transmitter Characteristics 17
9 Bluetooth Radio Characteristics 19
10 Host Interface Specifications 21
10.1 SDIO Specifications 21
10.2 USB Specifications 25
10.3 PCM Interface Specifications 28
11 Pin Definitions 29
12 Host Configuration Options 32
13 Mechanical Specifications 32
14 RF Layout Design Guidelines 34
15 Application Note for Surface Mount Modules 34
15.1 Introduction 34
15.2 Shipping 34
15.3 Labelling 36
15.4 Required Storage Conditions 37
15.5 Baking Conditions 38
15.6 Surface Mount Conditions 39
16 Regulatory 41
16.1 Regulatory IDs Summary 41
16.2 Certified Antennas 41
16.3 FCC 41
16.4 ISED Canada 43
16.5 Japan (MIC) Regulatory 45
16.6 Australia and New Zealand Regulatory 45
16.7 European Union 46
16.7.1 EU Declarations of Conformity 48
17 Ordering Information 49
17.1 General Comments 49
18 Bluetooth SIG Qualification 49
18.1 Overview 49
18.2 Qualification Steps When Referencing a Laird Connectivity Controller Subsystem Design 50
19 Additional Assistance 51

© Copyright 2020 Laird Connectivity, Inc.
All Rights Reserved
Americas: +1-800-492-2320
Europe: +44-1628-858-940
Hong Kong: +852 2923 0610

1 SCOPE

This document describes key hardware aspects of the Laird Connectivity Sterling™ LWB5+ series wireless modules providing either SDIO or USB2.0 interface for WLAN connection and UART/PCM, USB2.0/PCM for Bluetooth® connection. This document is intended to assist device manufacturers and related parties with the integration of this radio into their host devices. Data in this document is drawn from several sources and includes information found in the Cypress CYW4373EUBGT data sheet issued in July 2020 along with other documents provided from Cypress.

Note: **The information in this document is subject to change.** Please contact Laird Connectivity to obtain the most recent version of this document.

2 INTRODUCTION

2.1 General Description

The LWB5+ series wireless module is an integrated, small form factor 1x1 SISO 802.11 a/b/g/n/ac WLAN plus Bluetooth® 5.0 dual mode module that is optimized for low-power mobile devices. The integration of all WLAN and Bluetooth functionality in a single package supports low cost and simple implementation along with flexibility for platform-specific customization.

This device is pre-calibrated and integrates the complete transmit/receive RF paths including diplexer, switches, reference crystal oscillator, and power management units (PMU). The integrated ceramic chip antenna, MHF4 RF connector, and RF trace pad are selectable from different variants.

The LWB5+ series device supports IEEE 802.11ac 1x1 SISO with data rates up to MCS9 (433.3 Mbps). An internal Wi-Fi and Bluetooth coexistence scheme provides optimized connectivity while Wi-Fi and Bluetooth are working simultaneously. The device's low power consumption radio architecture and power management unit (PMU) proprietary power save technologies allow for extended battery life.

In addition, its dual 802.11ac and Bluetooth radio includes full digital MAC and baseband engines that handle all 802.11 CCK/OFDM® 2.4/5 GHz and Bluetooth 5.0 (Basic Rate, Enhanced Data Rate, and Bluetooth Low Energy) baseband and protocol processing.

The LWB5+ series wireless modules include three product SKUs which have different RF path and antenna types. Please contact Laird Connectivity Sales/FAE for further information. Ordering information is listed in Table 1.

Table 1: Product ordering information

Part Number	Description
453-00045R	1x1 802.11 a/b/g/n/ac + Bluetooth 5.0 - Integrated antenna (tape and reel)
453-00046R	1x1 802.11 a/b/g/n/ac + Bluetooth 5.0 – MHF4 (tape and reel)
453-00047R	1x1 802.11 a/b/g/n/ac + Bluetooth 5.0 – Trace pin (tape and reel)
453-00045C	1x1 802.11 a/b/g/n/ac + Bluetooth 5.0 – Integrated antenna (cut tape)
453-00046C	1x1 802.11 a/b/g/n/ac + Bluetooth 5.0 – MHF4 (cut tape)
453-00047C	1x1 802.11 a/b/g/n/ac + Bluetooth 5.0 – Trace pin (cut tape)
453-00045-K1	Development kit for 1x1 802.11 a/b/g/n/ac + Bluetooth 5.0 - Integrated antenna
453-00046-K1	Development kit for 1x1 802.11 a/b/g/n/ac + Bluetooth 5.0 – MHF4

© Copyright 2020 Laird Connectivity, Inc.
All Rights Reserved
Americas: +1-800-492-2320
Europe: +44-1628-858-940
Hong Kong: +852 2923 0610

3 LWB5+ Series Features Summary

The Laird Connectivity LWB5+ series device features are described in Table 2.

Table 2: LWB5+ series wireless module features

Feature	Description
Radio Front End	▪ Integrates the complete transmit/receive RF paths including diplexer, switches, reference crystal oscillator, and power manage unit (PMU) ▪ Supports 20/40/80 MHz channel bandwidth ▪ WLAN/Bluetooth share one antenna
The *Bluetooth*® word mark and logos are registered trademarks owned by Bluetooth SIG, Inc. Any use of such marks by Laird Connectivity is under license. Other trademarks and trade names are those of their respective owners.	
Power Management	One buck regulator, multiple LDO regulators, and a power management unit (PMU) are integrated into the CYW4373E. All regulators are programmable via the PMU. These blocks simplify power supply design for Bluetooth and WLAN functions in embedded designs.
Pre-Calibration	RF system tested and calibrated in production
Sleep Clock	An external sleep clock of 32.768 kHz is required.
Host Interface	SDIO v3.0 interface that can operate in 4b or 1b mode and a USB 2.0 interface. The Bluetooth section supports USB 2.0, USB 1.1, SDIO, and a high-speed 4-wire UART interface. An on-chip USB 2.0 hub provides a shared single USB connection to both WLAN and Bluetooth target devices.
Advanced WLAN	▪ IEEE 802.11ac compliant ▪ Support for MCS8 VHT20 in 20 MHz channels for up to 86.7 Mbps data ▪ Single-stream spatial multiplexing up to 433.3 Mbps data rate ▪ Supports 20, 40, and 80 MHz channels with optional SGI (256 QAM modulation) ▪ Full IEEE 802.11a/b/g/n legacy compatibility with enhanced performance ▪ TX and RX low-density parity check (LDPC) support for improved range and power efficiency ▪ On-chip power amplifiers and low-noise amplifiers for both bands ▪ Support wide variety of WLAN encryption: WEP/WPA/TKIP/WPA2 AES-CCMP
Advanced Bluetooth	▪ Qualified for Bluetooth Core Specification 5.0 with all Bluetooth 4.2 optional features – QDID: 158628 – Declaration ID: D050382 ▪ Bluetooth Class 1 or Class 2 transmitter operation ▪ Support data rate: 1 Mbps (GFSK), 2 Mbps (π/4-DQPSK), 3 Mbps (8-DPSK) ▪ Supports extended synchronous connections (eSCO) for enhanced voice quality by allowing for retransmission of dropped packets ▪ Adaptive frequency hopping (AFH) for reducing radio frequency interference ▪ Interface support, host controller interface (HCI) using a highspeed UART or USB interface, and PCM for audio data ▪ Low power consumption improves battery life of IoT and embedded devices ▪ Supports multiple simultaneous Advanced Audio Distribution Profiles (A2DP) for stereo sound ▪ Automatic frequency detection for standard crystal and TCXO values

Strap Value CONFIG_HOST [2-0]	WLAN	Bluetooth/Bluetooth LE	Notes
000	USB	USB	USB 2.0
101	SDIO	UART	SDIO 1.8V
100	SDIO	UART	SDIO 3.3V

© Copyright 2020 Laird Connectivity, Inc.
All Rights Reserved
Americas: +1-800-492-2320
Europe: +44-1628-858-940
Hong Kong: +852 2923 0610

4 SPECIFICATIONS

Table 3: Specifications

Feature	Description
Physical Interface	68-pin LGA package (including 17 thermal ground pads under the package)
Wi-Fi Interface	1-bit or 4-bit Secure Digital I/O; USB 2.0
Bluetooth/BLE Interface	Host Controller Interface (HCI) using high speed UART, USB 2.0
Main Chip	Cypress CYW4373EUBGT
Input Voltage Requirements	Operational: VBAT is 3.2V to 4.8V ** EVM/harmonics are improved with VBAT ≥ 3.6V
I/O Signalling Voltage	Typical DC 3.2V to 3.6V or DC 1.8 V ± 10%
Operating Temperature	-40° to +85°C (-40° to +185°F)
Operating Humidity	10 to 90% (non-condensing)
Storage Temperature	-40° to +85°C (-40° to +185°F)
Storage Humidity	10 to 90% (non-condensing)
MSL (Moisture Sensitivity Level)	4
Maximum Electrostatic Discharge	Conductive 4KV; Air coupled 8KV (follow EN61000-4-2)
Size – mm (in.)	Length: 17 (0.67) Width: 12 (0.47) Thickness: 2.13 (0.08)
Weight – g (oz.)	~0.7 (~0.02)
Wi-Fi Media	Direct Sequence-Spread Spectrum (DSSS) Complementary Code Keying (CCK) Orthogonal Frequency Divisional Multiplexing (OFDM)
Bluetooth Media	Frequency Hopping Spread Spectrum (FHSS)
Wi-Fi Multimedia	WMM Wi-Fi Multimedia - PowerSave (WMM-PS with U-APSD) WMM-Sequential Access (WMM-SA with PCF)
Network Architecture Types	Infrastructure (client operation)
Wi-Fi Standards	IEEE 802.11a, 802.11b, 802.11e, 802.11g, 802.11h, 802.11i, 802.11k*, 802.11n, 802.11r, 802.11v*, 802.11ac
Bluetooth Standards	Bluetooth 5.0 Core Spec
Wi-Fi Data Rates Supported	Support 802.11 ac/a/b/g/n 1x1 SISO. 802.11b (DSSS, CCK) 1, 2, 5.5, 11 Mbps 802.11a/g (OFDM) 6, 9, 12, 18, 24, 36, 48, 54 Mbps 802.11n (OFDM, HT20/HT40, MCS0-7) 802.11ac (OFDM, VHT20, MCS0-8; OFDM, VHT40/HT80, MCS0-9)
Modulation Table	BPSK, QPSK, CCK, 16-QAM, 64-QAM, and 256-QAM.

© Copyright 2020 Laird Connectivity, Inc.
All Rights Reserved
Americas: +1-800-492-2320
Europe: +44-1628-858-940
Hong Kong: +852 2923 0610

Feature				Description						
802.11ac 802.11n	HT MCS Index	VHT MCS Index	Spatial Streams	Modulation	Coding	20 MHz		40 MHz		80 MHz	
						No SGI	SGI	No SGI	SGI	No SGI	SGI
	0	0	1	BPSK	1/2	6.5	7.2	13.5	15	29.3	32.5
	1	1	1	QPSK	1/2	13	14.4	27	30	58.5	65
	2	2	1	QPSK	3/4	19.5	21.7	40.5	45	87.8	97.5
	3	3	1	16-QAM	1/2	26	28.9	54	60	117	130
	4	4	1	16-QAM	3/4	39	43.3	81	90	175.5	195
	5	5	1	64-QAM	2/3	52	57.8	108	120	234	260
	6	6	1	64-QAM	3/4	58.5	65	121.5	135	263.3	292.5
	7	7	1	64-QAM	5/6	65	72.2	135	150	292.5	325
		8	1	256-QAM	3/4	78	86.7	162	180	351	390
		9	1	256-QAM	5/6	N/A	N/A	180	200	390	**433.3**

802.11ac/n Spatial Streams	1 (1x1 SISO)
Bluetooth Data Rates Supported	1, 2, 3 Mbps
Bluetooth Modulation	GFSK@ 1 Mbps Pi/4-DQPSK@ 2 Mbps 8-DPSK@ 3 Mbps
Regulatory Certifications	United States (FCC) EU - Member countries of European Union (ETSI) ISED (Canada) Australia Japan
2.4 GHz Frequency Bands	**EU:** 2.4 GHz to 2.483 GHz **FCC/ISED:** 2.4 GHz to 2.473 GHz **MIC:** 2.4 GHz to 2.495 GHz **RCM**: 2.4 GHz to 2.483 GHz
2.4 GHz Operating Channels (Wi-Fi)	**EU:** 13 (3 non-overlapping) **FCC/ISED:** 11 (3 non-overlapping) **MIC:** 14 (4 non-overlapping) **RCM**: 13 (3 non-overlapping)

© Copyright 2020 Laird Connectivity, Inc.
All Rights Reserved
Americas: +1-800-492-2320
Europe: +44-1628-858-940
Hong Kong: +852 2923 0610

Feature	Description	
5 GHz Frequency Bands	**EU** 5.15 GHz to 5.35 GHz (Ch 36/40/44/48/52/56/60/64) 5.47 GHz to 5.725 GHz (Ch 100/104/108/112/116/120/124/128/132/136/140) 5.725 GHz to 5.85 GHz (Ch 149/153/157/161/165) **FCC** 5.15 GHz to 5.35 GHz (Ch 36/40/44/48/52/56/60/64) 5.47 GHz to 5.725 GHz (Ch 100/104/108/112/116/120/124/128/132/136/140/144 5.725 GHz to 5.85 GHz (Ch 149/153/157/161/165) **ISED** 5.15 GHz to 5.35 GHz (Ch 36/40/44/48/52/56/60/64) 5.47 GHz to 5.725 GHz (Ch 100/104/108/112/116/132/136/140/144 5.725 GHz to 5.85 GHz (Ch 149/153/157/161/165) **MIC** 5.15 GHz to 5.35 GHz (Ch 36/40/44/48/52/56/60/64) 5.47 GHz to 5.725 GHz (Ch 100/104/108/112/116/120/124/128/132/136/140) **RCM** 5.15 GHz to 5.35 GHz (Ch 36/40/44/48/52/56/60/64) 5.47 GHz to 5.725 GHz (Ch 100/104/108/112/116/132/136/140 5.725 GHz to 5.85 GHz (Ch 149/153/157/161/165)	
5 GHz Operating Channels (Wi-Fi)	EU: 24 non-overlapping; FCC: 25 non-overlapping ISED: 22 non-overlapping; MIC: 19 non-overlapping RCM: 21 non-overlapping	
Transmit Power ***Note:*** *Transmit power on each channel varies per individual country regulations. All values are nominal with +/-2 dBm tolerance at room temperature.* *Tolerance could be up to +/-2.5 dBm across operating temperature.* ***Note:*** *HT20 – 20 MHz-wide channels* *HT40 – 40 MHz-wide channels* *HT80 – 80 MHz-wide channels*	**802.11a**	
	6 Mbps	16 dBm (40 mW)
	54 Mbps	15 dBm (31.6 mW)
	802.11b	
	1 Mbps	16.5 dBm (44.7 mW)
	11 Mbps	16.5 dBm (44.7 mW)
	802.11g	
	6 Mbps	16 dBm (40 mW)
	54 Mbps	15.5 dBm (35.5 mW)
	802.11n (2.4 GHz)	
	HT20; MCS0-7	13.5 dBm (22.4 mW)
	HT40; MCS0-7	13.5 dBm (22.4 mW)
	802.11n (5 GHz)	
	HT20; MCS0-5	16 dBm (40 mW)
	HT20; MCS6-7	15 dBm (31.6 mW)
	HT40; MCS0-7	13 dBm (20 mW)
	802.11ac (5 GHz)	
	VHT20; MCS0-5	16 dBm (40 mW)
	VHT20; MCS6-7	15 dBm (31.6 mW)
	VHT20; MCS8	13 dBm (20 mW)
	VHT40; MCS0-7	13 dBm (20 mW)
	VHT40; MCS8-9	11 dBm (12.6 mW)
	VHT80; MCS0-7	12 dBm (15.8 mW)
	VHT80; MCS8-9	11 dBm (12.6 mW)
	Bluetooth	
	1 Mbps (1DH5)	7 dBm (5 mW)
	2 Mbps	3 dBm (1.99 mW)
	3 Mbps	3 dBm (1.99 mW)
	BLE (1 Mbps)	7 dBm (5 mW)

© Copyright 2020 Laird Connectivity, Inc.
All Rights Reserved
Americas: +1-800-492-2320
Europe: +44-1628-858-940
Hong Kong: +852 2923 0610

Feature	Description	
Typical Receiver Sensitivity (PER <= 10%) ***Note:*** *All values nominal, +/-3 dBm.*	**802.11a:**	
	6 Mbps	-92 dBm
	54 Mbps	-74 dBm
	802.11b:	
	1 Mbps	-96 dBm (PER < 8%)
	11 Mbps	-90 dBm (PER < 8%)
	802.11g:	
	6 Mbps	-93 dBm
	54 Mbps	-76 dBm
	802.11n (2.4 GHz)	
	6.5 Mbps (MCS0; HT20)	-93 dBm
	65 Mbps (MCS7; HT20)	-74 dBm
	13.5 Mbps (MCS0; HT40)	-91 dBm
	135 Mbps (MCS7; HT40)	-71 dBm
	802.11n (5 GHz)	
	6.5 Mbps (MCS0; HT20)	-91 dBm
	65 Mbps (MCS7; HT20)	-73 dBm
	13.5Mbps (MCS0; HT40)	-89 dBm
	135Mbps (MCS7; HT40)	-69 dBm
	802.11ac (5 GHz)	
	6.5 Mbps (MCS0; VHT20)	-90 dBm
	78 Mbps (MCS8; VHT20)	-67 dBm
	13.5 Mbps (MCS0; VHT40)	-89 dBm
	180 Mbps (MCS9; VHT40)	-63 dBm
	29.3 Mbps (MCS0; VHT80)	-85 dBm
	390 Mbps (MCS9; VHT80)	-60 dBm
	Bluetooth:	
	1 Mbps (1DH5)	-91 dBm
	2Mbps (2DH5)	-93 dBm
	3 Mbps (3DH5)	-87 dBm
	Bluetooth LE	-94 dBm
Operating Systems Supported	Linux Android	
Security	▪ WEP ▪ WPA and WPA2 (Personal) support for powerful encryption and authentication ▪ AES and TKIP in hardware for faster data encryption and IEEE 802.11i compatibility ▪ Reference WLAN subsystem provides Wi-Fi Protected Setup (WPS). ▪ CKIP	

© Copyright 2020 Laird Connectivity, Inc.
All Rights Reserved
Americas: +1-800-492-2320
Europe: +44-1628-858-940
Hong Kong: +852 2923 0610

Feature	Description	
Compliance	**EU** EN 300 328 EN 301 489-1 EN 301 489-17 EN 301 893	 EN 62368-1:2014 EN 300 440 2011/65/EU (RoHS)
	FCC 47 CFR FCC Part 15.247 47 CFR FCC Part 15.407 47 CFR FCC Part 2.1091	**ISED Canada** RSS-247
	AS/NZS AS/NZS 4268:2017	**MIC** ARIB STD-T66/RCR STD-33 (2.4 GHz) ARIB STD-T71 (5 GHz)
Certifications (Pending)	***Bluetooth*® SIG Qualification**	
Warranty	One Year Warranty	
All specifications are subject to change without notice		

© Copyright 2020 Laird Connectivity, Inc.
All Rights Reserved
Americas: +1-800-492-2320
Europe: +44-1628-858-940
Hong Kong: +852 2923 0610

5 WLAN Functional Description

5.1 Overview

The LWB5+ series wireless module is designed based on the Cypress CYW4373EUBGT 802.11ac/a/b/g/n chipset. It is optimized for high speed, reliability, and low-power embedded applications. It is integrated with dual-band WLAN (2.4/5 GHz) and Bluetooth 5.0. Its functionality includes the following:

- Improved throughput on the link due to frame aggregation, RIFS (reduced inter-frame spacing), and half guard intervals.
- Support for LDPC (Low Density Parity Check) codes.
- Improved 11n performance due to features such as 11n frame aggregation (TX A-MPDU) and low-overhead host-assisted buffering (RX A-MPDU). These techniques can improve performance and efficiency of applications involving large bulk data transfers such as file transfers or high-resolution video streaming.
- IEEE 802.11ac, 1x1 SISO with data rate up to MCS9 (433.3 Mbps).

Additional functionality is listed in Table 4.

Table 4: WLAN functions

<table>
<tr><th>Feature</th><th>Description</th></tr>
<tr><td>WLAN MAC</td><td>▪ Enhanced MAC for supporting IEEE 802.11ac features
▪ Transmission and reception of aggregated MPDUs (A-MPDUs) for very high throughput (VHT)
▪ Support for power management schemes, including WMM power-save, power-save multi-poll (PSMP) and multiphase PSMP operation
▪ Support for immediate ACK and Block-ACK policies
▪ Interframe space timing support, including RIFS
▪ Support for RTS/CTS and CTS-to-self frame sequences for protecting frame exchanges
▪ Back-off counters in hardware for supporting multiple priorities as specified in the WMM specification
▪ Timing synchronization function (TSF), network allocation vector (NAV) maintenance, and target beacon transmission time (TBTT)
▪ generation in hardware and capturing the TSF timer on an external time synchronization pulse
▪ Hardware offload for AES-CCMP, legacy WPA TKIP, legacy WEP ciphers, WAPI, and support for key management
▪ Support for coexistence with Bluetooth and other external radios
▪ Programmable independent basic service set (IBSS) or infrastructure basic service set functionality
▪ Statistics counters for MIB support</td></tr>
<tr><td>WLAN Security</td><td>▪ WLAN Encryption features supported include:
– Temporal Key Integrity Protocol (TKIP)/Wired Equivalent Privacy (WEP)
– Advanced Encryption Standard (AES)/Counter-Mode/CBC-MAC Protocol (CCMP)
– WLAN Authentication and Private Infrastructure (WPAI)</td></tr>
<tr><td>WLAN Channel</td><td>Channel frequency supported.
<table>
<tr><th colspan="2">20 MHz</th><th colspan="2">40 MHz</th><th colspan="2">80 MHz</th></tr>
<tr><th>Channel</th><th>Freq. (MHz)</th><th>Channel</th><th>Freq. (MHz)</th><th>Channel</th><th>Freq. (MHz)</th><th>Channel</th><th>Freq. (MHz)</th></tr>
<tr><td>1</td><td>2412</td><td>36</td><td>5180</td><td>1-5</td><td>2422</td><td>42</td><td>5210</td></tr>
<tr><td>2</td><td>2417</td><td>40</td><td>5200</td><td>2-6</td><td>2427</td><td>58</td><td>5290</td></tr>
<tr><td>3</td><td>2422</td><td>44</td><td>5220</td><td>3-7</td><td>2432</td><td>74</td><td>5370</td></tr>
<tr><td>4</td><td>2427</td><td>48</td><td>5240</td><td>4-8</td><td>2437</td><td>90</td><td>5410</td></tr>
<tr><td>5</td><td>2432</td><td>52</td><td>5260</td><td>5-9</td><td>2422</td><td>106</td><td>5530</td></tr>
<tr><td>6</td><td>2437</td><td>56</td><td>5280</td><td>6-10</td><td>2447</td><td>122</td><td>5610</td></tr>
<tr><td>7</td><td>2422</td><td>60</td><td>5300</td><td>7-11</td><td>2452</td><td>138</td><td>5690</td></tr>
<tr><td>8</td><td>2447</td><td>64</td><td>5320</td><td>36-40</td><td>5190</td><td>155</td><td>5775</td></tr>
<tr><td>9</td><td>2452</td><td>100</td><td>5500</td><td>44-48</td><td>5230</td><td></td><td></td></tr>
<tr><td>10</td><td>2457</td><td>104</td><td>5520</td><td>52-56</td><td>5270</td><td></td><td></td></tr>
</table></td></tr>
</table>

© Copyright 2020 Laird Connectivity, Inc.
All Rights Reserved
Americas: +1-800-492-2320
Europe: +44-1628-858-940
Hong Kong: +852 2923 0610

11	2462	108	5540	60-64	5310
12	2467	112	5560	68-72	5350
13	2472	116	5580	76-80	5390
		120	5600	84-88	5430
		124	5620	92-96	5470
		128	5640	100-104	5510
		132	5660	108-112	5550
		136	5680	116-120	5590
		140	5700	124-128	5630
		144	5720	132-136	5670
		149	5745	140-144	5710
		153	5765	149-153	5755
		157	5785	157-161	5795
		161	5805		
▪		165	5825		

© Copyright 2020 Laird Connectivity, Inc.
All Rights Reserved
Americas: +1-800-492-2320
Europe: +44-1628-858-940
Hong Kong: +852 2923 0610

6 Bluetooth Functional Description

The LWB5+ series wireless module includes a fully integrated Bluetooth baseband/radio. Several features and functions are listed in Table 5.

Table 5: Bluetooth functions

Feature	Description
Bluetooth Interface	▪ Voice interface: – Hardware support for continual PCM data transmission/reception without processor overhead. – Standard PCM clock rates from 64 kHz to 2.048 MHz with multi-slot handshake and synchronization. – A-law, U-law, and linear voice PCM encoding/decoding. ▪ High-Speed UART interface ▪ USB 2.0
Bluetooth Core functionality	▪ Bluetooth 5.0 ▪ Bluetooth Class 2/Bluetooth class 1 ▪ WLAN and Bluetooth share same LNA and antenna ▪ Digital audio interfaces with TDM interface for voice application ▪ Baseband and radio BDR and EDR package type: 1 Mbps, 2 Mbps, 3 Mbps ▪ Fully functional Bluetooth baseband: AFH, forward error correction, header error control, access code correction, CRC, encryption bit stream generation, and whitening. ▪ Adaptive Frequency Hopping (AFH) using Packet Error Rate (PER) ▪ Interlaced scan for faster connection setup ▪ Simultaneous active ACL connection setup ▪ Automatic ACL package type selection ▪ Full master and slave piconet support ▪ Scatter net support ▪ SCO/eSCO links with hardware accelerated audio signal processing and hardware supported PPEC algorithm for speech quality improvement ▪ All standard SCO/eSCO voice coding ▪ All standard pairing, authentication, link key, and encryption operations ▪ Encryption (AES) support
Bluetooth Low Energy (BLE) Core functionality	▪ Bluetooth 5.0 Core Spec ▪ Bluetooth 4.2 features: o LE privacy 1.2 o LE Secure Connection o LE Data Length Extension ▪ Bluetooth 4.0 features: o Advertiser, scanner, initiator, master, and slave roles support (connects to 16 links) o WLAN/Bluetooth coexistence (BCA) protocol support. o Shared RF with BDR/EDR o Encryption (AES) support o Intelligent Adaptive Frequency Hopping (AFH)

© Copyright 2020 Laird Connectivity, Inc.
All Rights Reserved
Americas: +1-800-492-2320
Europe: +44-1628-858-940
Hong Kong: +852 2923 0610

7 Block Diagram

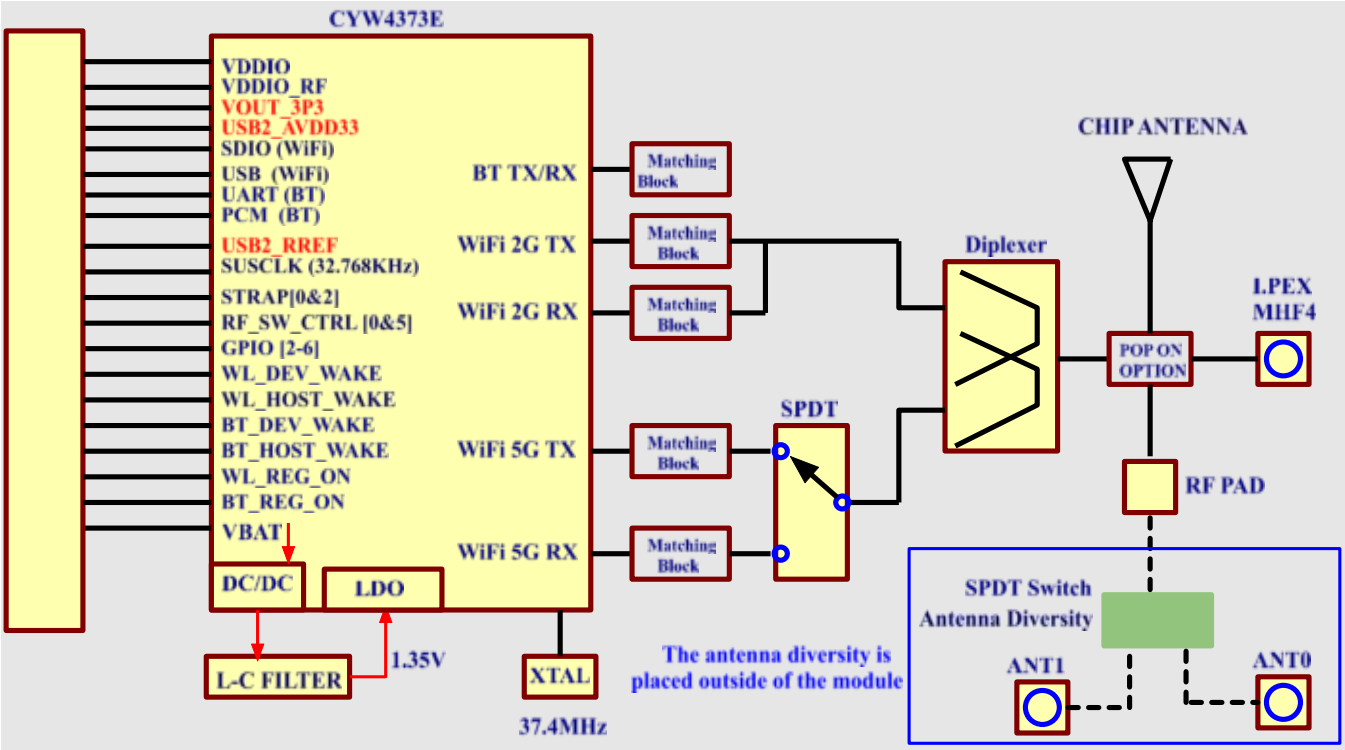

Figure 1: Block diagram

8 Electrical Characteristics

8.1 Absolute Maximum Ratings

Table 6 summarizes the absolute maximum ratings and Table 7 lists the recommended operating conditions for the LWB5+ series wireless module. Absolute maximum ratings are those values beyond which damage to the device can occur. Functional operation under these conditions, or at any other condition beyond those indicated in the operational sections of this document, is not recommended.

Note: Maximum rating for signals follows the supply domain of the signals.

Table 6: Absolute maximum ratings

Symbol (Domain)	Parameter	Max Rating	Unit
VDDIO	WLAN host SDIO interface I/O supply (for 1.8V system) (for 3.3V system)	2.2 4.0	V
VDDIO_RF	I/O configuration power supply (for 3.3V system)	4.0	V
VBAT	External DC power supply	5.0	V
Storage	Storage temperature	-40 to +85	°C
Antenna	Maximum RF input (reference to 50-Ω input)	+10	dBm
ESD	Electrostatic discharge tolerance	2000	V

© Copyright 2020 Laird Connectivity, Inc.
All Rights Reserved
Americas: +1-800-492-2320
Europe: +44-1628-858-940
Hong Kong: +852 2923 0610

8.2 Recommended Operating Conditions

Table 7: Recommended operating conditions

Symbol (Domain)	Parameter	Min	Typ	Max	Unit
VDDIO	WLAN and Bluetooth host interface I/O supply	1.62/2.97	1.8/3.3	1.98/3.63	V
VDDIO_RF	I/O supply for the RF switch control pads	3.2	3.3	3.63	V
VBAT	External DC power supply	3.2	3.30	3.63	V
	EVM/harmonics are improved	3.6	—	4.8	V
T-ambient	Ambient temperature	-40	25	85	°C

8.3 DC Electrical Characteristics

Table 8 and Table 9 list the general DC electrical characteristics over recommended operating conditions (unless otherwise specified).

Table 8: General DC electrical characteristics (For 1.8V operation VDDIO)

Symbol	Parameter	Conditions	Min	Typ	Max	Unit
VIH	High Level Input Voltage	—	1.17	—	—	V
VIL	Low Level Input Voltage	—	—	—	0.63	V
VOH	Output high Voltage	—	1.35	—	—	V
VOL	Output low Voltage	—	—	—	0.45	V

Table 9: General DC electrical characteristics (For 3.3V operation VIO_SD; VIO)

Symbol	Parameter	Conditions	Min	Typ	Max	Unit
VIH	High Level Input Voltage	—	2.0	—	—	V
VIL	Low Level Input Voltage	—	—	—	0.8	V
VOH	Output high Voltage	—	2.9	—	—	V
VOL	Output low Voltage	—	—	—	0.4	V

8.4 WLAN Radio Receiver Characteristics

Table 10 and Table 11 summarize the LWB5+ series wireless module receiver characteristics.

Table 10: WLAN receiver characteristics for 2.4 GHz single chain operation

Symbol	Parameter	Conditions	Min	Typ	Max	Unit
Frx	Receive input frequency range	—	2.412	—	2.484	GHz
Srf	Sensitivity					
	CCK, 1 Mbps	See Note[1]	—	-95	—	dBm
	CCK, 11 Mbps		—	-90	—	
	OFDM, 6 Mbps		—	-92	—	
	OFDM, 54 Mbps		—	-75	—	
	HT20, MCS0		—	-91	—	
	HT20, MCS7		—	-73	—	
	HT40, MCS0		—	-90	—	
	HT40, MCS7		—	-71	—	

© Copyright 2020 Laird Connectivity, Inc.
All Rights Reserved
Americas: +1-800-492-2320
Europe: +44-1628-858-940
Hong Kong: +852 2923 0610

Radj	Adjacent channel rejection					
	OFDM, 6 Mbps	See Note[1]	16	38	—	dB
	OFDM, 54 Mbps		-1	20.4	—	
	HT20, MCS0		16	33.3	—	
	HT20, MCS7		-2	13.7	—	

Table 11: WLAN receiver characteristics for 5 GHz single chain operation

Symbol	Parameter	Conditions	Min	Typ	Max	Unit
Frx	Receive input frequency range	—	5.15	—	5.825	GHz
Srf	Sensitivity					
	OFDM, 6 Mbps	See Note[1]	—	-92	—	dBm
	OFDM, 54 Mbps		—	-74	—	
	HT20, MCS0		—	-91	—	
	HT20, MCS7		—	-73	—	
	HT40, MCS0		—	-89	—	
	HT40, MCS7		—	-69	—	
	VHT20, MCS0		—	-90	—	
	VHT20, MCS8		—	-67	—	
	VHT40, MCS0		—	-89	—	
	VHT40, MCS9		—	-63	—	
	VHT80, MCS0		—	-85	—	
	VHT80, MCS9		—	-60	—	
Radj [Difference between interfering and desired signal (20 MHz apart)]	Adjacent channel rejection					
	OFDM, 6 Mbps	See Note[1]	16	31.7	—	dB
	OFDM, 54 Mbps		-1	13.8	—	
	OFDM, 65 Mbps		-2	8.4	—	
Radj. [Difference between interfering and desired sinal (40 MHz apart)]	OFDM, 6 Mbps	See Note[1]	32	44.7	—	dB
	OFDM, 54 Mbps		15	26.6	—	
	OFDM, 65 Mbps		14	26.8	—	

Note[1]: Performance data are measured under signal chain operation.

© Copyright 2020 Laird Connectivity, Inc.
All Rights Reserved
Americas: +1-800-492-2320
Europe: +44-1628-858-940
Hong Kong: +852 2923 0610

8.5 WLAN Transmitter Characteristics

Table 12: WLAN transmitter characteristics for 2.4 GHz operation (SDIO=VDIO=3.3V)

Symbol	Parameter	Conditions	Min	Typ	Max	Unit
Ftx	Transmit output frequency range	—	2.402	—	2.484	GHz
Pout	Output power	See Note[2]	—	—	—	—
	11b mask compliant	1-11Mbps	—	18	—	dBm
	11g mask compliant	6-36Mbps	—	18	—	
	11g EVM compliant	48-54Mbps	—	18	—	
	11n HT20 mask compliant	MCS0-6	—	18	—	
	11n HT20 EVM compliant	MCS7	—	17.5	—	
	11n HT40 mask compliant	MCS0-5	—	18	—	
	11n HT40 EVM compliant	MCS6-7	—	16.5	—	
ATx	Transmit power accuracy at 25 ℃	—	-2.0	—	+2.0	dB

Table 13: WLAN current consumption on 2.4 GHz (SDIO=VDIO=3.3V)

Freq.	Mode/Rate (Mbps)	Output Power (dBm)	Maximum Current Consumption (mA)[8]
2412 MHz	1 Mbps	18 dBm	369
	54 Mbps	18 dBm	365
2422 MHz	HT20 MCS7	17.5 dBm	351
	HT40 MCS7	16.5 dBm	342
2442 MHz	1 Mbps	18 dBm	369
	54 Mbps	17 dBm	365
	HT20 MCS7	17 dBm	351
	HT40 MCS7	16 dBm	342
2472 MHz	1 Mbps	18 dBm	369
	54 Mbps	17 dBm	365
2462 MHz	HT20 MCS7	17 dBm	351
	HT40 MCS7	16 dBm	342

Table 14: WLAN transmitter characteristics for 5 GHz operation (SDIO=VDDIO=3.3V)

Symbol	Parameter	Conditions	Min	Typ	Max	Unit
Ftx	Transmit output frequency range	—	5.15	—	5.925	GHz
Pout	Output power	See Note[2]	—	—	—	—
	11a mask compliant	6-36Mbps	—	17.5	—	dBm
	11a EVM compliant	48-54Mbps	—	17.5	—	
	11n HT20 mask compliant	MCS0-5	—	17.5	—	
	11n HT20 EVM compliant	MCS6-7	—	16.5	—	
	11n HT40 mask compliant	MCS0-5	—	17.5	—	
	11n HT40 EVM compliant	MCS6-7	—	16	—	
	11ac VHT20 mask compliant	MCS0-5	—	17.5	—	

© Copyright 2020 Laird Connectivity, Inc.
All Rights Reserved
Americas: +1-800-492-2320
Europe: +44-1628-858-940
Hong Kong: +852 2923 0610

Symbol	Parameter	Conditions	Min	Typ	Max	Unit
	11ac VHT20 EVM compliant	MCS6-8	—	15	—	
	11ac VHT40 mask compliant	MCS0-5	—	17.5	—	
	11ac VHT40 EVM compliant	MCS6-7	—	16	—	
	11ac VHT40 EVM compliant	MCS8-9	—	13.5	—	
	11ac VHT80 mask compliant	MCS0-5	—	17.5	—	
	11ac VHT80 EVM compliant	MCS6-7	—	16	—	
	11ac VHT80 EVM compliant	MCS8-9	—	13.5	—	
ATx	Transmit power accuracy at 25 ℃	—	-2.0	—	+2.0	dB

Table 15: WLAN current consumption on 5 GHz (SDIO=VDDIO=3.3V)

Frequency (MHz)	Mode/Rate (Mbps)	Output Power (dBm)	Maximum Current Consumption (mA)
5180	6 Mbps	17.5	370
	54 Mbps	17.5	354
	HT20 MCS0	17.5	372
	HT20 MCS7	16.5	350
5190	HT40 MCS0	17.5	410
	HT40 MCS7	16	377
5210	VHT80 MCS0	17.5	441
	VHT80 MCS9	13.5	352
5500	6 Mbps	17.5	370
	54 Mbps	17.5	354
	HT20 MCS0	17.5	372
	HT20 MCS7	16.5	350
5510	HT40 MCS0	17.5	410
	HT40 MCS7	16	377
5530	VHT80 MCS0	17.5	441
	VHT80 MCS9	13.5	352
5825	6 Mbps	17.5	370
	54 Mbps	17.5	354
	HT20 MCS0	17.5	372
	HT20 MCS7	16.5	350
5795	HT40 MCS0	17.5	410
	HT40 MCS7	16	377
5775	VHT80 MCS0	17.5	441
	VHT80 MCS9	13.5	352

Note[2]: Final TX power values on each channel are limited by regulatory requirements

© Copyright 2020 Laird Connectivity, Inc.
All Rights Reserved
Americas: +1-800-492-2320
Europe: +44-1628-858-940
Hong Kong: +852 2923 0610

9 Bluetooth Radio Characteristics

Table 16 through Table 18 describe the basic rate transmitter performance, basic rate receiver performance, enhanced rate receiver performance, and current consumption conditions at 25°C.

Table 16: Basic rate transmitter performance temperature at 25°C (3.3V)

Test Parameter		Min	Typ	Max	BT Spec.	Unit
Maximum RF Output Power	GFSK	—	—	7	0 ~ +20	dBm
	π/4-DQPSK	—	3	—		
	8-DPSK	—	3	—		
Frequency Range		2.4	—	2.4835	2.4 ≤ f ≤ 2.4835	GHz
20 dB Bandwidth		—	919.5	—	≤ 1000	KHz
Δf1avg Maximum Modulation		140	155	175	140 < Δf1avg < 175	KHz
Δf2max Minimum Modulation		115	135	—	≥ 115	KHz
Δf2avg/Δf1avg		—	0.9	—	≥ 0.80	—
Initial Carrier Frequency		—	± 25	± 75	≤ ± 75	KHz
Frequency Drift (DH1 packet)		—	± 10	± 25	± 25	KHz
Frequency Drift (DH3 packet)		—	± 10	± 40	± 40	KHz
Frequency Drift (DH5 packet)		—	± 10	± 40	± 40	KHz
Drift rate		—	8	20	20	KHz/50us
Adjacent Channel Power	F ≥ ± 3 MHz	—	-50	—	< -40	dBm
	F = ± 2 MHz	—	-46	—	≤ -20	dBm
	F = ± 1 MHz	—	-15	—	N/A	dBm

Table 17: Basic rate receiver performance at (3.3V)

Test Parameter		Min	Typ	Max	Bluetooth Spec.	Unit
Sensitivity (1DH5)	BER ≤ 0.1%	—	-91	—	≤ -70	dBm
Maximum Input	BER ≤ 0.1%	—	—	-20	≥ -20	dBm
Interference Performance	Co-Channel	—	9	11	11	dB
	C/I 1 MHz adjacent channel	—	-5.5	0	0	dB
	C/I 2 MHz adjacent channel	—	-38	-30	-30	dB
	C/I ≥ 3 MHz adjacent channel	—	-46	-40	-40	dB
	C/I image channel	—	-25.5	-9	-9	dB
	C/I 1-MHz adjacent to image channel	—	-39	-20	-20	dB

Table 18: Enhanced data rate receiver performance (3.3V)

Test Parameter		Min	Typ	Max	Bluetooth Spec.	Unit
Sensitivity (BER ≤ 0.01%)	π/4-DQPSK	—	-93	—	≤ -70	dBm
	8-DPSK	—	-87	—	≤ -70	dBm
Maximum Input (BER ≤ 0.1%)	π/4-DQPSK	—	—	-20	≥ -20	dBm
	8-DPSK	—	—	-20	≥ -20	dBm
C/I Co-Channel (BER ≤ 0.1%)	π/4-DQPSK	—	10.5	13	≤ ±13	dB
	8-DPSK	—	17.5	21	≤ ±21	dB

© Copyright 2020 Laird Connectivity, Inc.
All Rights Reserved
Americas: +1-800-492-2320
Europe: +44-1628-858-940
Hong Kong: +852 2923 0610

Test Parameter		Min	Typ	Max	Bluetooth Spec.	Unit
C/I 1 MHz adjacent Channel	π/4-DQPSK	—	-6	0	≤ 0	dB
	8-DPSK	—	-3	5	≤5	dB
C/I 2 MHz adjacent Channel	π/4-DQPSK	—	-38.5	-30	≤ -30	dB
	8-DPSK	—	-37.5	-25	≤ -25	dB
C/I ≥ 3 MHz adjacent Channel	π/4-DQPSK	—	-47	-40	≤ -40	dB
	8-DPSK	—	-39.5	-33	≤ -33	dB
C/I image channel	π/4-DQPSK	—	-24.5	-7	≤ -7	dB
	8-DPSK	—	-17	0	≤ 0	dB
C/I 1 MHz adjacent to image channel	π/4-DQPSK	—	-43	-20	≤ -20	dB
	8-DPSK	—	-37	-13	≤ -13	dB
Out-of-Band Blocking Performance (CW) BER ≤ 0.1%	30-2000MHz	—	-10	—	—	dBm
	2-2.399GHz	—	-27	—	—	dBm
	2.484-3GHz	—	-27	—	—	dBm
	3-12.75GHz	—	-10	—	—	dBm

Table 19: BLE RF Specifications (3.3V)

Parameter	Conditions	Min	Typ	Max	Unit
Frequency range	—	2402	—	2480	MHz
Rx sensitivity[3]	GFSK, 30.8% PER, 1Mbps	—	-94	—	dBm
Tx power[4]	—	—	—	7	dBm
Δf1 average	—	225	255	275	KHz
Δf2 maximum[5]	—	185	220	—	KHz
$\frac{\Delta f2\ avg}{\Delta f1\ avg}$ ratio	—	0.8	0.95	—	—

Notes

[3] Dirty Tx is Off.

[4] The Bluetooth LE TX power cannot exceed 10 dBm EIRP specification limit. The front-end losses and antenna gain/loss must be factored in so as not to exceed the limit.

[5] At least 99.9% of all Δf2 maximum frequency values recorded over 10 packets must be greater than 185 KHz.

© Copyright 2020 Laird Connectivity, Inc.
All Rights Reserved
Americas: +1-800-492-2320
Europe: +44-1628-858-940
Hong Kong: +852 2923 0610

10 Host Interface Specifications

10.1 SDIO Specifications

The LWB5+ series wireless module SDIO host interface pins are powered from the VIO_SD voltage supply. The SDIO electrical specifications are identical for the 1-bit SDIO and 4-bit SDIO modes.

10.1.1 Default Speed, High-speed Modes

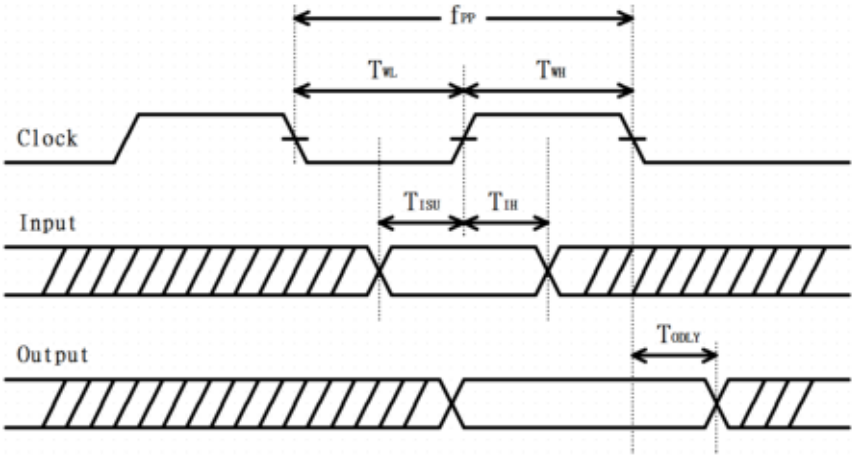

Figure 2: SDIO protocol timing diagram--- default mode (3.3V)

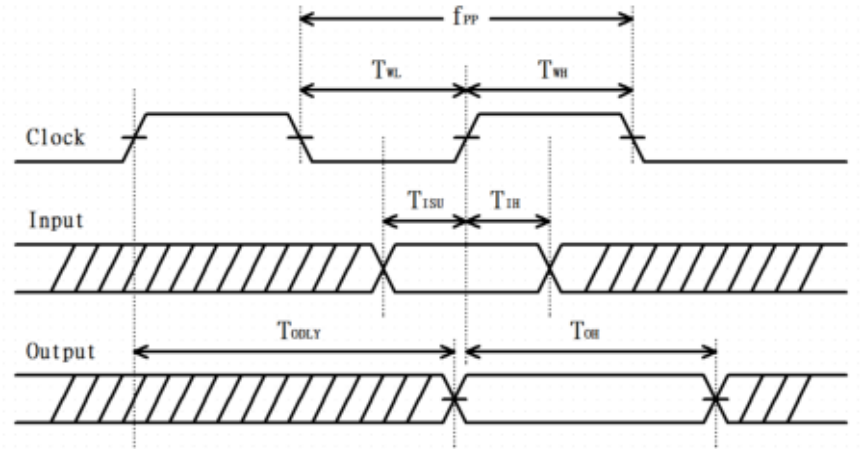

Figure 3: SDIO protocol timing diagram--- High-Speed mode (3.3V)

Note: Over full range of values specified in the Recommended Operating Conditions unless otherwise specified.

Table 20: SDIO timing requirements

Symbol	Parameter	Condition	Min.	Typ.	Max.	Unit
fPP	Clock Frequency	Default Speed	0	-	25	MHz
		High-Speed	0	-	50	
TWL	Clock low time	Default Speed	10	-	-	ns
		High-Speed	7	-	-	

© Copyright 2020 Laird Connectivity, Inc.
All Rights Reserved
Americas: +1-800-492-2320
Europe: +44-1628-858-940
Hong Kong: +852 2923 0610

Symbol	Parameter	Condition	Min.	Typ.	Max.	Unit
TWH	Clock high time	Default Speed High-Speed	10 7	- -	- -	ns
TISU	Input Setup time	Default Speed High-Speed	5 6	- -	- -	ns
TIH	Input Hold time	Default Speed High-Speed	5 2	- -	- -	ns
TODLY	Output delay time CL≦40pF (1 card)	Default Speed High-Speed	- -	- -	14 14	ns
TOH	Output hold time	High-Speed	0	-	-	ns

10.1.2 SDR12, SDR25, SDR50 Mode (up to 100 MHz) (1.8V)

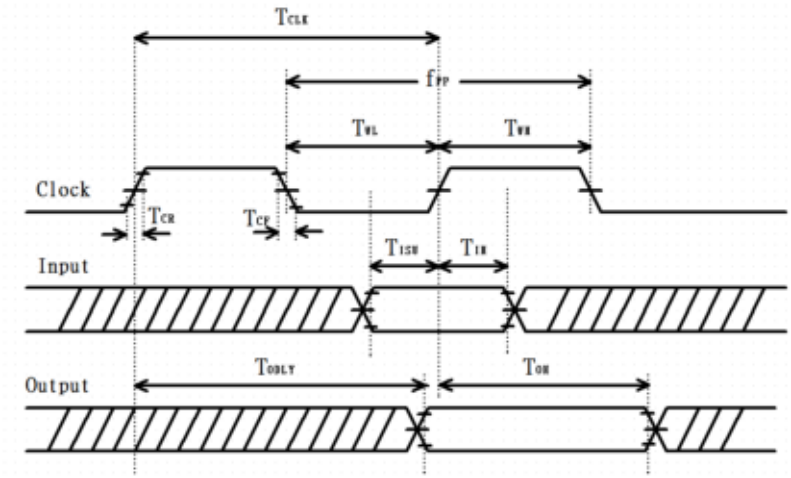

Figure 4: SDIO protocol timing diagram--- SDR12, SDR25, SDR50 modes (up to 100 MHz) (1.8V)

Note: Over full range of values specified in the Recommended Operating Conditions unless otherwise specified.

Table 21: SDIO timing requirements--- SDR12, SDR25, SDR50 modes (up to 100 MHz) (1.8V)

Symbol	Parameter	Condition	Min.	Typ.	Max.	Unit
fPP	Clock Frequency	SDR12/25/50	25	-	100	MHz
TISU	Input setup time	SDR12/25/50	3	--	-	ns
TIH	Input Hold time	SDR12/25/50	0.8	-	-	ns
TCLK	Clock Time	SDR12/25/50	10	-	40	ns
TCR, TCF	Raise time, Fall time TCR, TCF <2ns (max) at 100MHz CCARD=10pF	SDR12/25/50	-	-	0.2*TCLK	ns
TODLY	Output delay time CL≦30pF	SDR12/25/50	-	-	7.5	ns
TOH	Output hold time CL=15pF	SDR12/25/50	1.5	-	-	ns

© Copyright 2020 Laird Connectivity, Inc.
All Rights Reserved
Americas: +1-800-492-2320
Europe: +44-1628-858-940
Hong Kong: +852 2923 0610

10.1.3 SDR104 Mode (208 MHz) (1.8V)

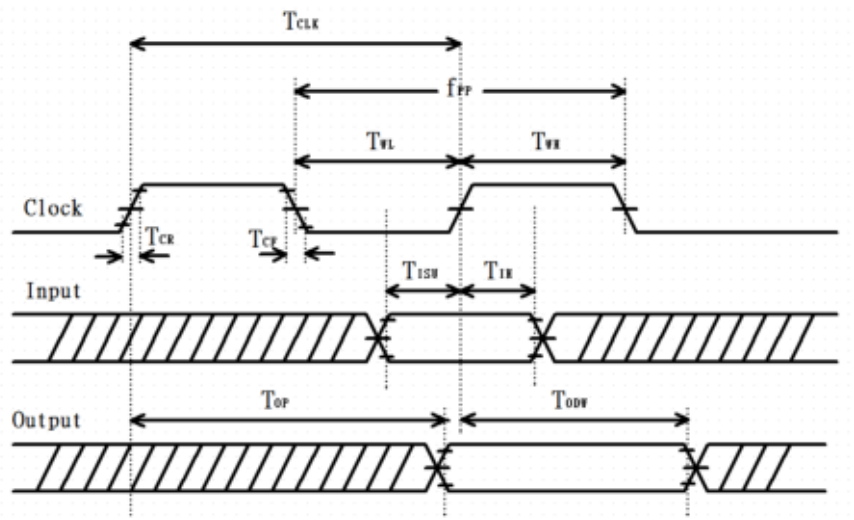

Figure 5: SDIO protocol timing diagram--- SDR104 modes (up to 208 MHz) (1.8V)

Note: Over full range of values specified in the Recommended Operating Conditions unless otherwise specified.

Table 22: SDIO timing requirements -- SDR104 modes (up to 208MHz) (1.8V)

Symbol	Parameter	Condition	Min.	Typ.	Max.	Unit
fPP	Clock Frequency	SDR104	0	-	208	MHz
TISU	Input setup time	SDR104	1.4	--	-	ns
TIH	Input Hold time	SDR104	0.8	-	-	ns
TCLK	Clock Time	SDR104	4.8	-	-	ns
TCR, TCF	Raise time, Fall time TCR, TCF <0.96ns (max) at 208MHz CCARD=10pF	SDR104	-	-	0.2*TCLK	ns
TOP	Card Output phase	SDR104	0	-	10	ns
TODW	Output timing pf variable data window	SDR12/25/50	2.88	-	-	ns

© Copyright 2020 Laird Connectivity, Inc.
All Rights Reserved
Americas: +1-800-492-2320
Europe: +44-1628-858-940
Hong Kong: +852 2923 0610

10.1.4 SDR50 Mode (50 MHz) (1.8V)

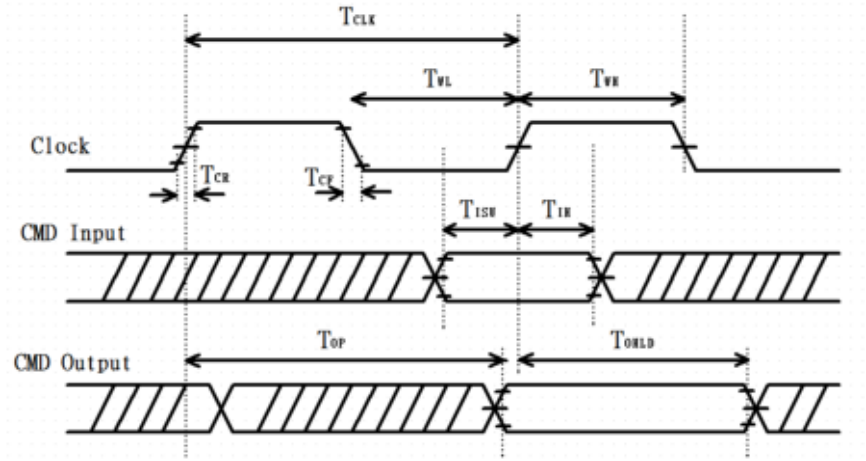

Figure 6: SDIO CMD timing diagram--- SDR50 modes (50 MHz) (1.8V)

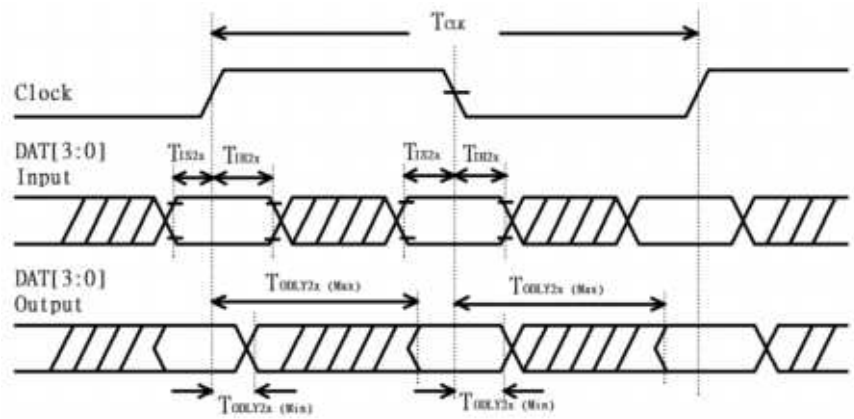

Figure 7: SDIO DAT[3:0] timing diagram--- SDR50 modes (50 MHz) (1.8V)

Note: In SDR50 mode, DAT[3:0] lines are samples on both edges of the clock (not applicable for CMD line)

Table 23: SDIO timing requirements – SDR50 modes (50 MHz)

Symbol	Parameter	Condition	Min.	Typ.	Max.	Unit
Clock						
TCLK	Clock time 50MHz (max) between rising edge	SDR50	20	--	--	ns
TCR, TCF	Rise time, fall time TCR, TCF <4.00ns (max) at 50MHz. CCARD=10pF	SDR50	--	--	0.2*TCLK	ns
Clock Duty	--	SDR50	45	--	55	%
CMD Input (referenced to clock rising edge)						
TIS	Input setup time CCARD≦10pF (1 card)	SDR50	6	--	--	ns
TIH	Input hold time CCARD≦10pF (1 card)	SDR50	0.8	--	--	ns

© Copyright 2020 Laird Connectivity, Inc.
All Rights Reserved
Americas: +1-800-492-2320
Europe: +44-1628-858-940
Hong Kong: +852 2923 0610

Symbol	Parameter	Condition	Min.	Typ.	Max.	Unit
CMD Output (referenced to clock rising and failing edge)						
TODLY	Output delay time during data transfer mode CL≦30pF (1 card)	SDR50	--	--	13.7	ns
TOHLD	Output hold time CL≥15pF (1 card)	SDR50	1.5	--	--	ns
DAT[3:0] Input (referenced to clock rising and failing edges)						
TIS2X	Input setup time CCARD≦10pF (1 card)	SDR50	3	--	--	ns
TIH2X	Input hold time CCARD≦10pF (1 card)	SDR50	0.8	--	--	ns
DAT[3:0] Output (referenced to clock rising and failing edges)						
TODLY2X (max)	Output delay time during data transfer mode CL≦25pF (1 card)	SDR50	--	--	7.0	ns
TODLY2X (min)	Output hold time CL≥15pF (1 card))	SDR50	1.5	--	--	ns

10.2 USB Specifications

10.2.1 USB LS Driver and Receiver Parameters

Notes: Over full range of values specified in the Recommended Operating Conditions unless otherwise specified.

The load is 100Ω differential for these parameters, unless other specified.

Table 24: USB LS driver and receiver specifications

Symbol	Parameter	Min.	Typ.	Max.	Unit
BR	Baud rate	-	1.5	-	Mbps
BRPPM	Baud rate tolerance	-15000	-	15000	ppm
Driver Specifications					
VOH	Output signal ended high Defined with 1.425KΩ pull-up resistor to 3.6V	2.8	-	3.6	V
VOL	Output signal ended low Defined with 1.425KΩ pull-up resistor to ground	0.0	-	0.3	V
VCRS	Output signal crossover voltage	1.3		2.0	V
TLR	Data fall time Defined from 10% to 90% for raise time and 90% to 10% for fall time	75.0	-	300.0	ns
TLF	Data rise time Defined from 10% to 90% for raise time and 90% to 10% for fall time	75.0	-	300.0	ns
TLRFM	Rise and fall time matching	80.0	-	125.0	%

© Copyright 2020 Laird Connectivity, Inc.
All Rights Reserved
Americas: +1-800-492-2320
Europe: +44-1628-858-940
Hong Kong: +852 2923 0610

Symbol	Parameter	Min.	Typ.	Max.	Unit
TUDJ1	Source jitter total: to next transition *Including frequency tolerance. Timing difference between the differential data signals. *Defined at crossover point of differential signals	-95	-	95	ns
TUDJ2	Source jitter total: for paired transitions *Including frequency tolerance. Timing difference between the differential data signals. *Defined at crossover point of differential signals	-150	-	150	ns
Receiver Specifications					
VIH	Input signal ended high	2.0	-	-	V
VIL	Input signal ended low	-	-	0.8	V
VDI	Differential input sensitivity	0.2	-	-	V

10.2.2 USB FS Driver and Receiver Parameters

Notes: Over full range of values specified in the Recommended Operating Conditions unless otherwise specified.
The load is 100Ω differential for these parameters, unless other specified.

Table 25: USB FS driver and receiver specifications

Symbol	Parameter	Min.	Typ.	Max.	Unit
BR	Baud rate	-	12.0	-	Mbps
BRPPM	Baud rate tolerance	-2500	-	2500	ppm
Driver Specifications					
VOH	Output signal ended high Defined with 1.425KΩ pull-up resistor to 3.6V	2.8	-	3.6	V
VOL	Output signal ended low Defined with 1.425KΩ pull-up resistor to ground	0.0	-	0.3	V
VCRS	Output signal crossover voltage	1.3		2.0	V
TFR	Output raise time Defined from 10% to 90% for raise time and 90% to 10% for fall time	-4.0	-	20.0	ns
TFL	Output fall time Defined from 10% to 90% for raise time and 90% to 10% for fall time	-4.0	-	20.0	ns
TDJ1	Source jitter total: to next transition *Including frequency tolerance. Timing difference between the differential data signals. *Defined at crossover point of differential signals	-3.5	-	3.5	ns
TDJ2	Source jitter total: for paired transitions *Including frequency tolerance. Timing difference between the differential data signals. *Defined at crossover point of differential signals	-4.0	-	4.0	ns

© Copyright 2020 Laird Connectivity, Inc.
All Rights Reserved
Americas: +1-800-492-2320
Europe: +44-1628-858-940
Hong Kong: +852 2923 0610

Symbol	Parameter	Min.	Typ.	Max.	Unit
TFDEOP	Source jitter for differential transition to SE0 transition. Defined at crossover point of differential signals	-2.0	-	5.0	ns
Receiver Specifications					
VIH	Input signal ended high	2.0	-	-	V
VIL	Input signal ended low	-	-	0.8	V
VDI	Differential input sensitivity	0.2	-	-	V
TJR1	Receiver jitter: to next transition Defined at crossover point of differential data signals	-18.5	-	18.5	ns
TJR2	Receiver jitter: for paired transitions Defined at crossover point of differential data signals	-9.0	-	9.0	ns

10.2.3 USB HS Driver and Receiver Parameters

Notes: Over full range of values specified in the Recommended Operating Conditions unless otherwise specified.
The load is 100Ω differential for these parameters, unless other specified.

Table 26: USB HS driver and receiver specifications

Symbol	Parameter	Min.	Typ.	Max.	Unit
BR	Baud rate	-	480	-	Mbps
BRPPM	Baud rate tolerance	-500	-	500	ppm
Driver Specifications					
VHSOH	Data signal high	360	-	440	mV
VHSOL	Data signal low	-10	-	10	mV
THSR	Data rise time Defined from 10% to 90% for raise time and 90% to 10% for fall time	500	-	-	ns
THSF	Data fall time Defined from 10% to 90% for raise time and 90% to 10% for fall time	-500	-	-	ns
Receiver Specifications					
VHSCM	Input signal ended low	-50	-	500	mV

© Copyright 2020 Laird Connectivity, Inc.
All Rights Reserved
Americas: +1-800-492-2320
Europe: +44-1628-858-940
Hong Kong: +852 2923 0610

10.3 PCM Interface Specifications

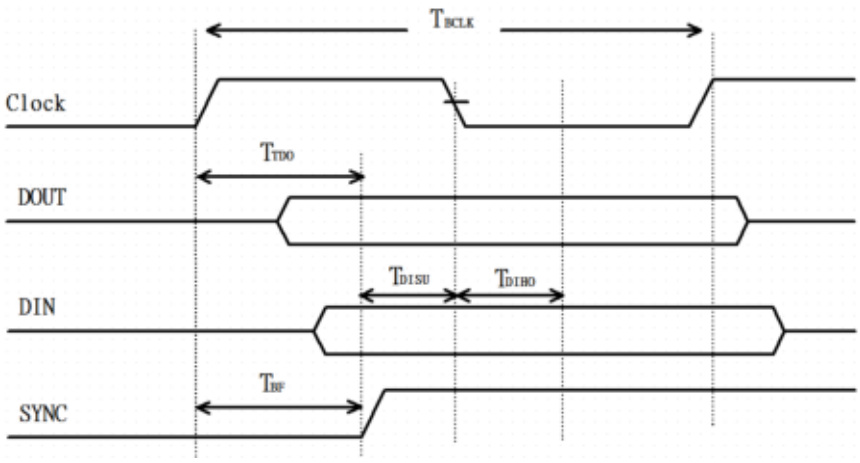

Figure 8: PCM timing specification – master mode

Table 27: PCM timing specification – master mode

Symbol	Parameter	Min.	Typ.	Max.	Unit
FBCLK	-	-	2/2.048	-	MHz
Duty CycleBCLK	-	0.4	0.5	0.6	-
TBCLK rise/fall	-	-	3	-	ns
TDO	-	-	-	15	ns
TDISU	-	20	-	-	ns
TDIHO	-	15	-	-	ns
TBF	-	-	-	15	ns

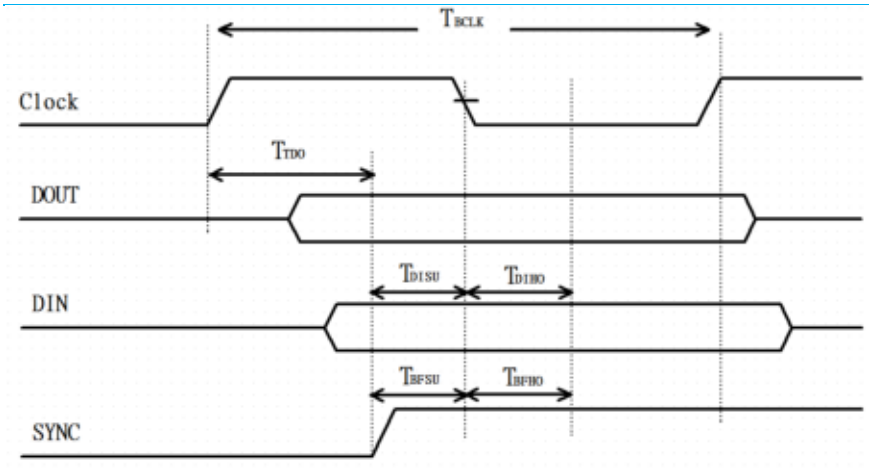

Figure 9: PCM timing specification – slave mode

Table 28: PCM timing specification – slave mode

Symbol	Parameter	Min.	Typ.	Max.	Unit
FBCLK	-	-	2/2.048	-	MHz
Duty CycleBCLK	-	0.4	0.5	0.6	-

© Copyright 2020 Laird Connectivity, Inc.
All Rights Reserved
Americas: +1-800-492-2320
Europe: +44-1628-858-940
Hong Kong: +852 2923 0610

Symbol	Parameter	Min.	Typ.	Max.	Unit
TBCLK rise/fall	-	-	3	-	ns
TDO	-	-	-	30	ns
TDISU	-	15	-	-	ns
TDIHO	-	10	-	-	ns
TBFSU	-	15	-	-	ns
TBFHO	-	10	-	-	ns

11 Pin Definitions

Table 29: Pin definitions of LWB5+ series wireless module

Pin #	Name	Type	Pins map to Chip	Voltage Ref.	Function	If Not Used
1	GND	-	-	-	Ground	GND
2	RF_SW_CTRL_5	O	F10	VDDIO_RF	RF switch control signal for Antenna diversity (only for trace pad variant)	NC
3	RF_SW_CTRL_0	O	D10	VDDIO_RF	RF switch control signal for Antenna diversity (only for trace pad variant)	NC
4	STRAP_2	I	G7	VDDIO	Strapping options to define Host interface, see Table 30	--
5	STRAP_0	I	F7	VDDIO	Strapping options to define Host interface, see Table 30	--
6	VOUT_3P3	PWR O/P	-	VOUT_3P3	Internal Regulator 3.3V output. If VBAT is 3.6V or greater, this power source should be used for VDDIO_RF, and USB2_AVDD33 if strapped for USB. Otherwise leave this pin disconnected.	NC
7	VDDIO_RF	PWR I/P	-	VDDIO_RF	DC supply voltage for RF switch IO's. If VBAT is 3.6V or greater, connect to VOUT_3P3. Otherwise connect to VBAT.	--
8	GND	-	-	-	Ground	GND
9	SDIO_DATA0	I/O	B8	VDDIO	SDIO data lin0	NC
10	SDIO_DATA1	I/O	C7	VDDIO	SDIO data lin1	NC
11	SDIO_DATA3	I/O	B7	VDDIO	SDIO data lin3	NC
12	SDIO_CMD	I/O	C6	VDDIO	SDIO command line	NC
13	SDIO_DATA2	I/O	B6	VDDIO	SDIO data lin2	NC
14	GND	-	-	-	Ground	GND

© Copyright 2020 Laird Connectivity, Inc.
All Rights Reserved
Americas: +1-800-492-2320
Europe: +44-1628-858-940
Hong Kong: +852 2923 0610

Pin #	Name	Type	Pins map to Chip	Voltage Ref.	Function	If Not Used
15	SDIO_CLK	I	A6	VDDIO	SDIO clock input	NC
16	GND	-	-	-	Ground	GND
17	VBAT	PWR I/P	-	VBAT	DC supply voltage for module. Operational: VBAT is 3.2V to 4.8V (See VDDIO_RF configuration) ** VBAT at 3.6V to 4.8V has the same TX power but a better EVM/harmonic emissions margin.	--
18	VBAT	PWR I/P	-	VBAT	DC supply voltage for module. Operational: VBAT is 3.2V to 4.8V (See VDDIO_RF configuration) ** VBAT at 3.6V to 4.8V has the same TX power but a better EVM/harmonic emissions margin.	--
G1	GND	-	-	-	Ground	GND
19	GPIO_4	I	D3	VDDIO	Reserved for feature support WCI-2 LTE coexistence Interface	NC
20	GPIO_6	O	E4	VDDIO	Reserved for feature support 3-wire external coexistence interface. TX_CONF: Grant of access indication to external device.	NC
21	GPIO_3	I	D2	VDDIO	Reserved for feature support 3-wire external coexistence interface. STATUS: Indicates priority and TX/RX.	NC
22	GPIO_2	I	E1	VDDIO	Reserved for feature support 3-wire external coexistence interface. RF_ACTIVE: Request indication from external device for access	NC
23	GPIO_5	O	E3	VDDIO	Reserved for feature support WCI-2 LTE coexistence Interface	NC
24	USB2_DM	I/O	F1	-	Data minus of shared USB 2.0 port	NC
25	USB2_DP	I/O	G1	-	Data plus of shared USB 2.0 port	NC
26	USB2_RREF	I/O	H1	-	Bandgap reference resistor. When in SDIO interface, leave open. When in USB interface, connect to ground through 4.75K Ohm 1%.	--
27	GND	-	-	-	Ground	GND
28	USB2_AVDD33	PWR	H2	VBAT	In SDIO interface, short to Ground. In USB interface, If VBAT is 3.6V or greater, connect to VOUT_3P3. Otherwise connect to VBAT.	--
29	GND	-	-	-	Ground	GND
30	VDDIO	PWR	-	-	WLAN/BT IO Voltage (1.8V/3.3V).	--

© Copyright 2020 Laird Connectivity, Inc.
All Rights Reserved
Americas: +1-800-492-2320
Europe: +44-1628-858-940
Hong Kong: +852 2923 0610

Pin #	Name	Type	Pins map to Chip	Voltage Ref.	Function	If Not Used
31	GPIO_1	I/O	D1	VDDIO	Reserved for feature support Reserved for WL_DEVICE_WAKE. Input from Host to wake up WLAN module.	NC
32	BT_REG_ON	I	C3	VDDIO	Enables Bluetooth regulators. Internal 10K pull-up to enable Bluetooth by default. Ground to disable Bluetooth.	NC
33	WL_REG_ON	I	D4	VDDIO	Enables WLAN regulators. Internal 10K pull-up to enable WLAN by default. Ground to disable WLAN.	NC
G2	GND	-	-	-	Ground	GND
34	SUSCLK	I	J2	VDDIO	External Sleep Clock input (32.768KHz) Externally provided sleep clock is required	--
35	GND	-		-	Ground	GND
36	GPIO_0	I/O	F3	VDDIO	Reserved for feature support Reserved for WL_HOST_WAKE. Output signal to wake up host.	NC
37	BT_DEVICE _WAKE	I	L2	VDDIO	Reserved for feature support BT_DEVICE_WAKE. Input signal from Host.	NC
38	BT_PCM_IN	I	J1	VDDIO	PCM data input.	NC
39	BT_PCM_CLK	I/O	K1	VDDIO	PCM clock. Can be master (Output) or slave (Input)	NC
40	BT_PCM_SYNC	I/O	K3	VDDIO	PCM Sync. Can be master (Output) or slave (Input); Or SLIMbus data.	NC
41	BT_PCM_OUT	O	L3	VDDIO	PCM data output.	NC
42	GND	-		-	Ground	GND
43	BT_UART_TXD	O	M1	VDDIO	Serial data output for the HCI UART interface.	NC
44	BT_UART_CTSn	I	M2	VDDIO	Active-Low clear-to-send signal for the HCI UART interface.	NC
45	BT_UART_RXD	I	N2	VDDIO	Serial data input for the HCI UART interface.	NC
46	BT_UART_RTSn	O	N3	VDDIO	Active-Low request-to-send signal for the HCI UART interface.	NC
47	BT_HOST_WAK E	O	M3	VDDIO	Reserved for feature support BT_HOST_WAKE. Output signal to wake up Host.	NC
48	GND	-	-	-	Ground	GND
49	GND	-	-	-	Ground	GND
50	RF_OUT	-	-	-	RF output pin for the LWB5+ “ST” variant. For “SA” or “SC” variants, it is no connection.	NC
51	GND	-	-	-	Ground	GND
G3-G17	GND	-	-	-	Ground	GND

© Copyright 2020 Laird Connectivity, Inc.
All Rights Reserved
Americas: +1-800-492-2320
Europe: +44-1628-858-940
Hong Kong: +852 2923 0610

12 Host Configuration Options

LWB5+ series wireless module support various host configurations for WLAN and Bluetooth. Its detail configurations are shown in Table 30.

Table 30: Wi-Fi host interface configuration table

Strap Value CONFIG_HOST [2-0]	WLAN	Bluetooth/BLE	Notes
000	USB	USB	USB2.0
101	SDIO	UART	SDIO 1.8V (Supports DS/HS and SDR speed modes)
100	SDIO	UART	SDIO 3.3V (Supports DS and HS speed modes only)

13 Mechanical Specifications

Module dimensions of LWB5+ series wireless module is 17 x 12 x 2.1 mm. Detail drawings are shown in Figure 10.

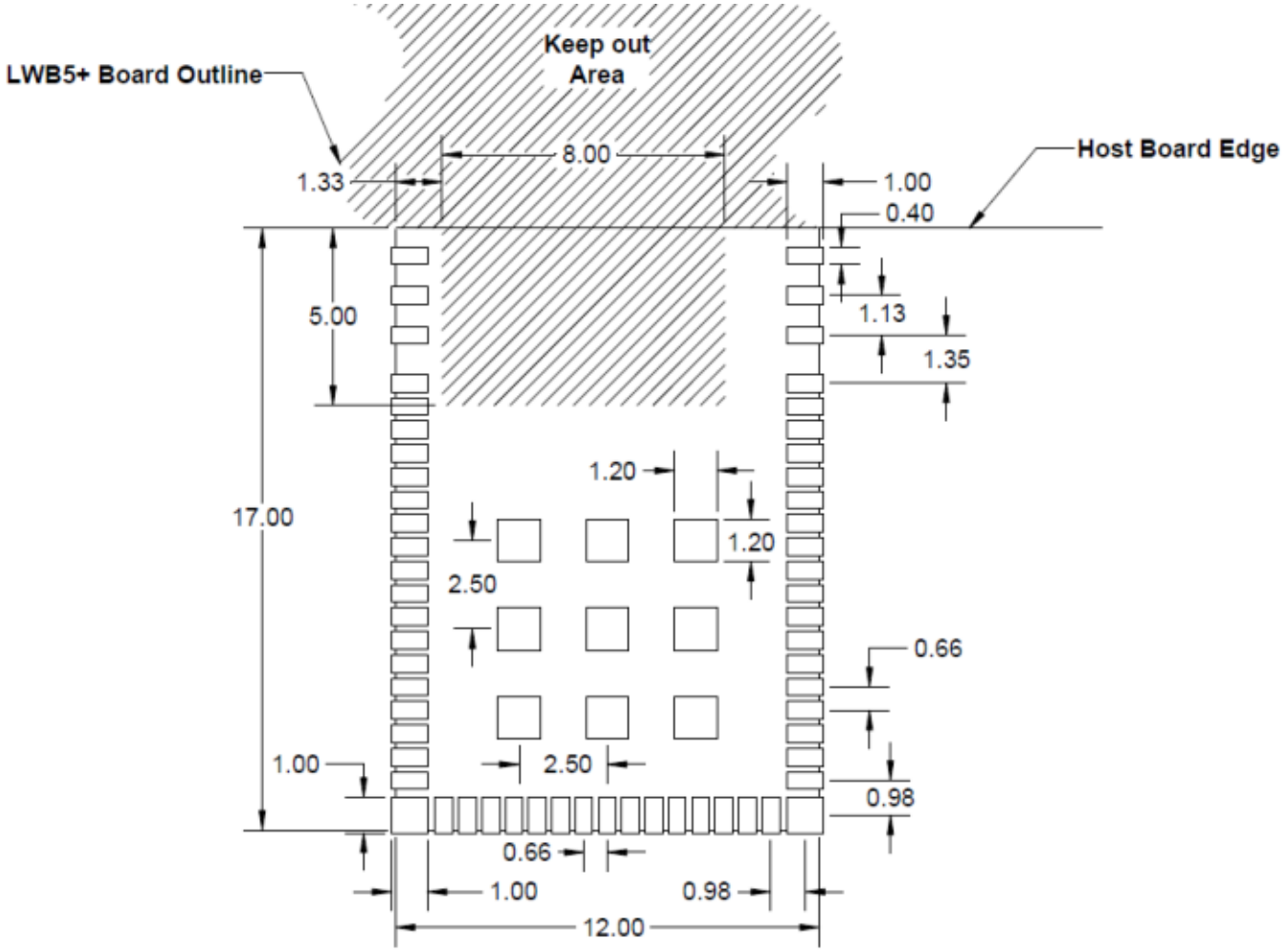

Figure 10: Mechanical drawing - LWB5+ series wireless module

© Copyright 2020 Laird Connectivity, Inc.
All Rights Reserved
Americas: +1-800-492-2320
Europe: +44-1628-858-940
Hong Kong: +852 2923 0610

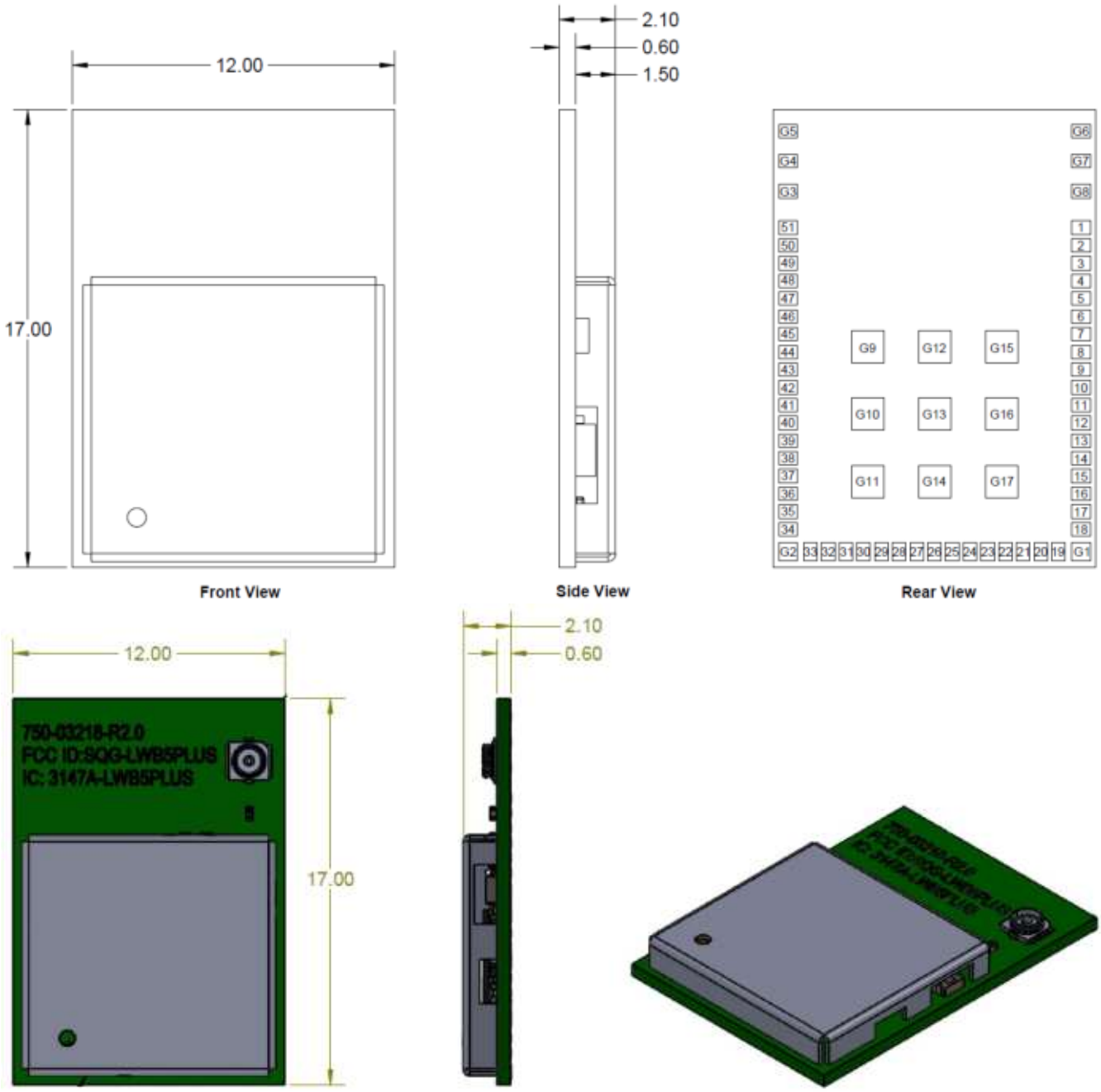

Figure 11: Module dimension of LWB5+ series wireless module – Top View

---

Note: The Wi-Fi MAC address is located on the product label.
The last digit of Wi-Fi MAC address is assigned to either *0, 2, 4, 6, 8, A, C, E.*
The Bluetooth MAC address is the Wi-Fi MAC address plus 1.

© Copyright 2020 Laird Connectivity, Inc.
All Rights Reserved
Americas: +1-800-492-2320
Europe: +44-1628-858-940
Hong Kong: +852 2923 0610

14 RF Layout Design Guidelines

The following is a list of RF layout design guidelines and recommendation when installing a Laird Connectivity radio into your device.

- Do not run antenna cables directly above or directly below the radio.
- Do not place any parts or run any high-speed digital lines below the radio.
- If there are other radios or transmitters located on the device (such as a Bluetooth radio), place the devices as far apart from each other as possible. Also, make sure there is at least 25 dB isolation between these two antennas.
- Ensure that there is the maximum allowable spacing separating the antenna connectors on the Laird Connectivity radio from the antenna. In addition, do not place antennas directly above or directly below the radio.
- Laird Connectivity recommends the use of a double-shielded cable for the connection between the radio and the antenna elements.
- Be sure to put a 10uF capacitor on EACH 3.3V power pin. Also, place that capacitor to the pin as close as possible to make sure the internal PMU working correctly.
- Use proper electro-static-discharge (ESD) procedures when installing the Laird Connectivity radio module. To avoid negatively impacting Tx power and receiver sensitivity, do not cover the antennas with metallic objects or components.

15 Application Note for Surface Mount Modules

15.1 Introduction

Laird Connectivity's surface mount modules are designed to conform to all major manufacturing guidelines. This application note is intended to provide additional guidance beyond the information that is presented in the user manual. This application note is considered a living document and will be updated as new information is presented.

The modules are designed to meet the needs of several commercial and industrial applications. They are easy to manufacture and conform to current automated manufacturing processes.

15.2 Shipping

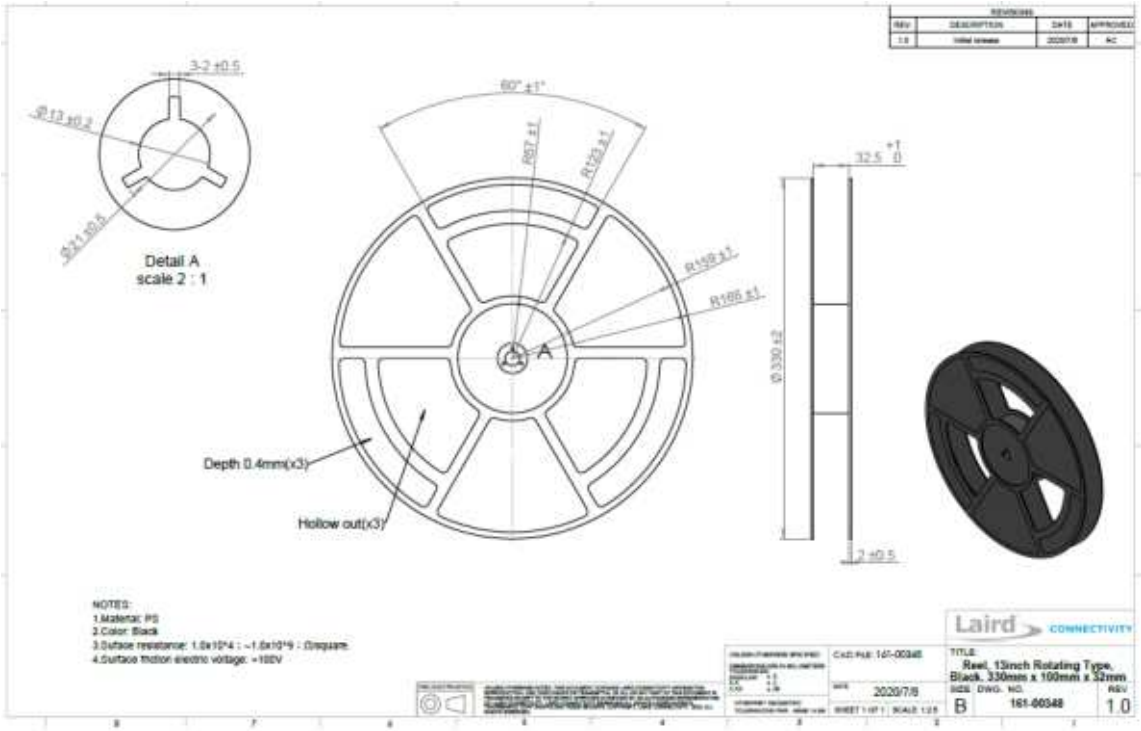

Figure 12: Reel specifications

© Copyright 2020 Laird Connectivity, Inc.
All Rights Reserved
Americas: +1-800-492-2320
Europe: +44-1628-858-940
Hong Kong: +852 2923 0610

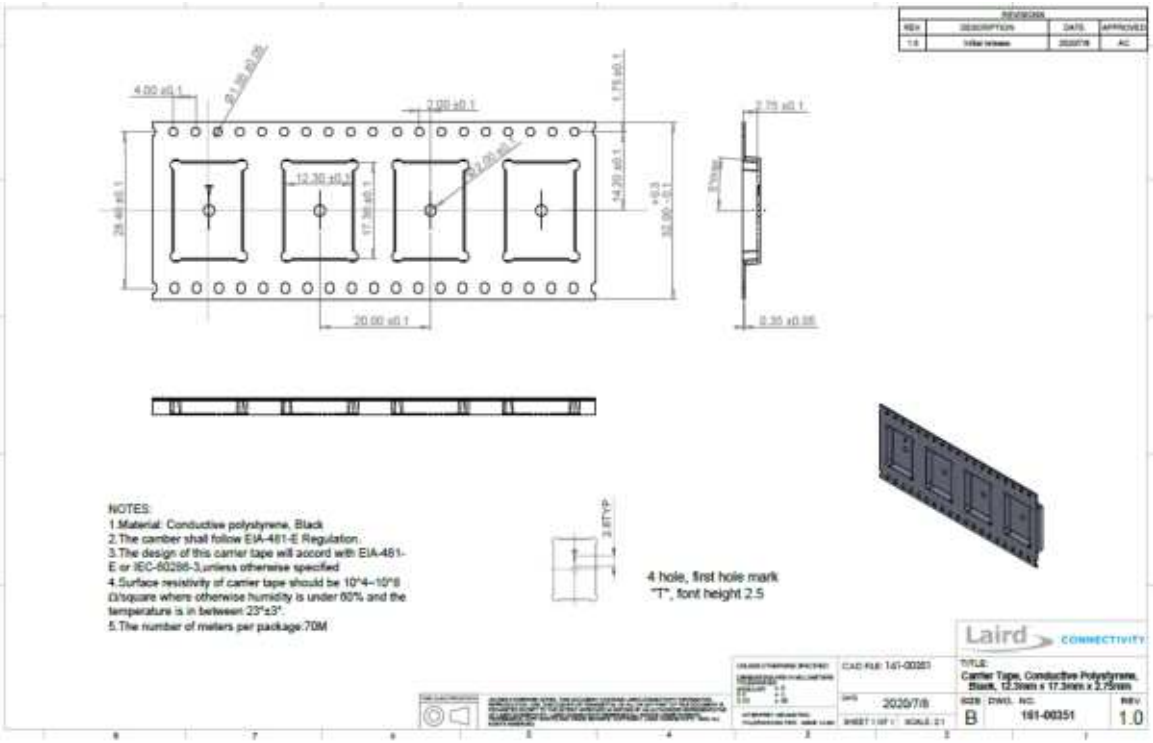

Figure 13: Tape specifications, 161-00351

There are 1,000 Sterling LWB5+ modules taped in a reel (and packaged in a pizza box) and two boxes per carton (2000 modules per carton). Reel, boxes, and carton are labeled with the appropriate labels. See **Error! Reference source not found.** for more information.

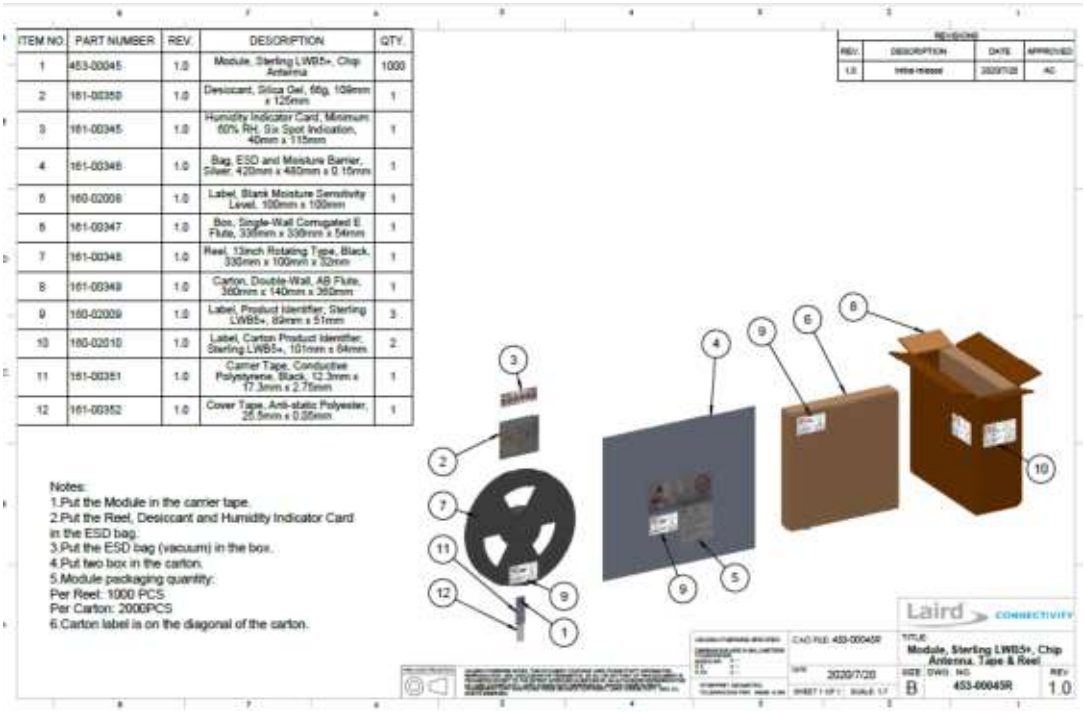

Figure 14: Sterling LWB5+ packaging process

© Copyright 2020 Laird Connectivity, Inc.
All Rights Reserved
Americas: +1-800-492-2320
Europe: +44-1628-858-940
Hong Kong: +852 2923 0610

15.3 Labelling

The following labels are located on the antistatic bag.

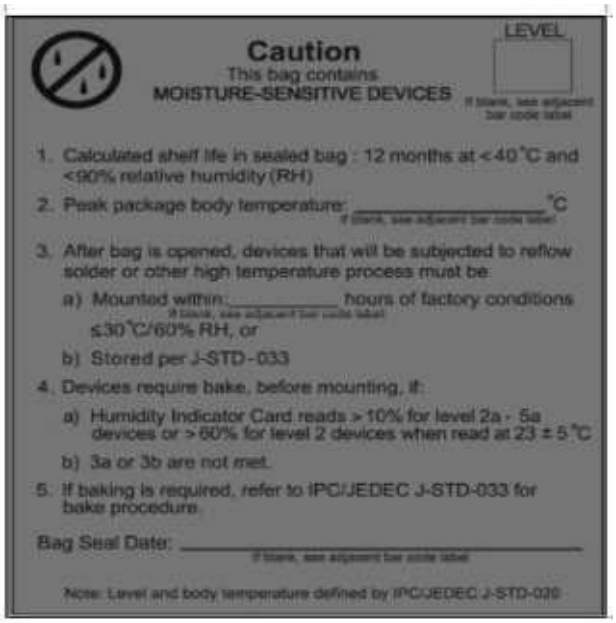

Figure 15: Anti-static bag label – 1



Figure 16: Anti-static bag label – 2

The following label is located on the pizza box.



Figure 17: Box label

© Copyright 2020 Laird Connectivity, Inc.
All Rights Reserved
Americas: +1-800-492-2320
Europe: +44-1628-858-940
Hong Kong: +852 2923 0610

The following package label is located on adjacent sides of the master carton.



Figure 18: Master carton package label

15.4 Required Storage Conditions

15.4.1 Prior to Opening the Dry Packing

The following are required storage conditions ***prior* to opening the dry packing**:

- Normal temperature: 5~40˚C
- Normal humidity: 80% (Relative humidity) or less
- Storage period: One year or less

Note: Humidity means relative humidity.

15.4.2 After Opening the Dry Packing

The following are required storage conditions ***after* opening the dry packing** (to prevent moisture absorption):

- Storage conditions for one-time soldering:
  - Temperature: 5-25°C
  - Humidity: 60% or less
  - Period: 72 hours or less after opening
- Storage conditions for two-time soldering
  - Storage conditions following opening and prior to performing the 1st reflow:
    - Temperature: 5-25°C
    - Humidity: 60% or less
    - Period: A hours or less after opening
  - Storage conditions following completion of the 1st reflow and prior to performing the 2nd reflow
    - Temperature: 5-25°C
    - Humidity: 60% or less
    - Period: B hours or less after completion of the 1st reflow

---

Note: Should keep A+B within 72 hours.

© Copyright 2020 Laird Connectivity, Inc.
All Rights Reserved
Americas: +1-800-492-2320
Europe: +44-1628-858-940
Hong Kong: +852 2923 0610

15.4.3 Temporary Storage Requirements after Opening

The following are temporary storage requirements after opening:

- Only re-store the devices *once* prior to soldering.
- Use a dry box or place desiccant (with a blue humidity indicator) with the devices and perform dry packing again using vacuumed heat-sealing.

The following indicate the required storage period, temperature, and humidity for this temporary storage:

- Storage temperature and humidity:

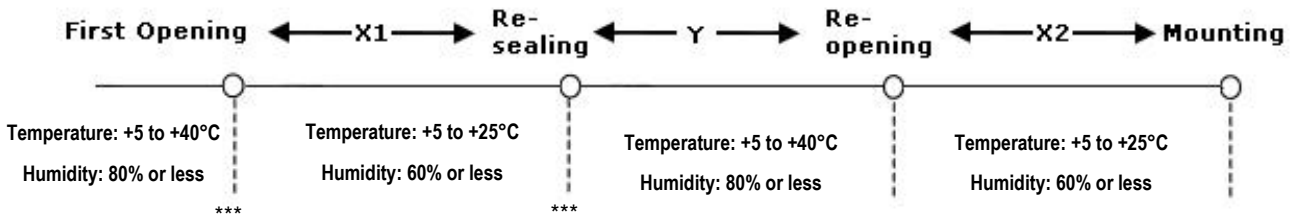

*** - External atmosphere temperature and humidity of the dry packing

- Storage period:
  - X1+X2 – Refer to After Opening the Dry Packing storage requirements. Keep is X1+X2 within 72 hours.
  - Y – Keep within two weeks or less.

15.5 Baking Conditions

Baking conditions and processes for the module follow the J-STD-033 standard which includes the following:

- The calculated shelf life in a sealed bag is 12 months at <40℃ and <80% relative humidity.
- Once the packaging is opened, the SiP must be mounted (per MSL4/Moisture Sensitivity Level 4) within 72 hours at <30˚C and <60% relative humidity.
- If the SiP is not mounted within 72 hours or if, when the dry pack is opened, the humidity indicator card displays >10% humidity, then the product must be baked for 48 hours at 125 ˚C (±5 ˚C).

© Copyright 2020 Laird Connectivity, Inc.
All Rights Reserved
Americas: +1-800-492-2320
Europe: +44-1628-858-940
Hong Kong: +852 2923 0610

15.6 Surface Mount Conditions

The following soldering conditions are recommended to ensure device quality.

15.6.1 Soldering

Note: When soldering, the stencil thickness should be ≥ 0.1 mm.

Convection reflow or IR/Convection reflow (one-time soldering or two-time soldering in air or nitrogen environment)

- Measuring point – IC package surface
- Temperature profile:

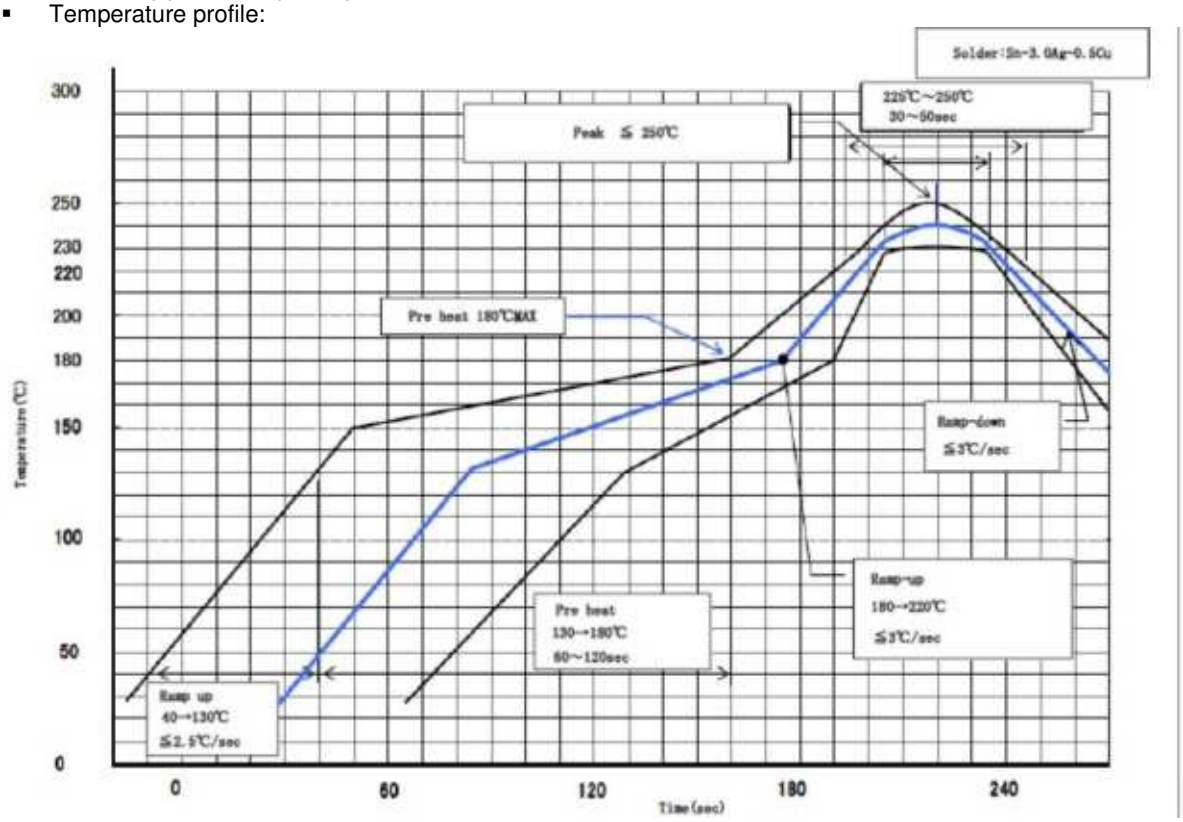

Figure 19: Temperature profile

- Ramp-up: 40-130˚C. Less than 2.5˚C/sec
- Pre heat: 130-180˚C 60-120 sec, 180˚C MAX
- Ramp-up: 180-220˚C. Less than 3˚C/sec
- Peak Temperature: MAX 250˚C
    - 225˚C ~ 250˚C, 30 ~ 50 sec
- Ramp-down: Less than 3˚C/sec

© Copyright 2020 Laird Connectivity, Inc.
All Rights Reserved
Americas: +1-800-492-2320
Europe: +44-1628-858-940
Hong Kong: +852 2923 0610

15.6.2 Cautions When Removing the SIP from the Platform for RMA

- Bake the platform before removing the SIP from the platform. Reference baking conditions.
- Remove the SIP by using a hot air gun. This process should be carried out by a skilled technician.

Suggestion conditions:



- One-side component platform:
  - Set the hot plate at 280 °C.
  - Put the platform on the hot plate for 8~10 seconds.
  - Remove the SIP from platform.
- Two-side components platform:
  - Use two hot air guns
  - On the bottom side, use a pre-heated nozzle (temperature setting of 200~250 °C) at a suitable distance from the platform PCB.
  - On the top side, apply a remove nozzle (temperature setting of 330 °C). Heat the SIP until it can be removed from platform PCB.



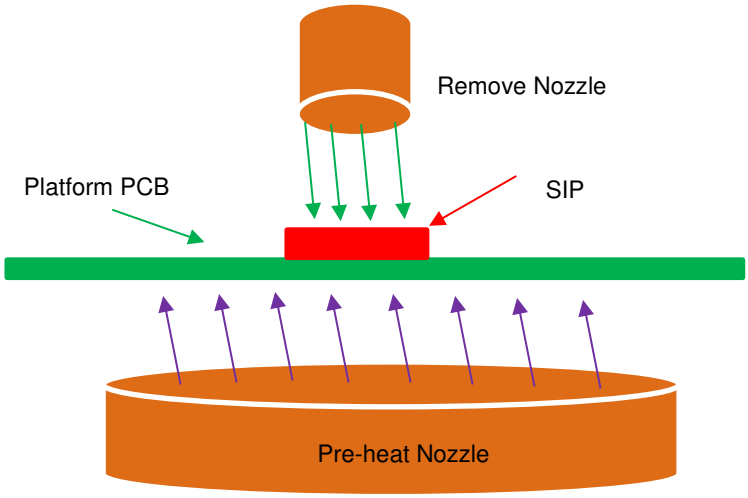

- Remove the residue solder under the bottom side of SIP. (Note: Alternate module pictured as an example)

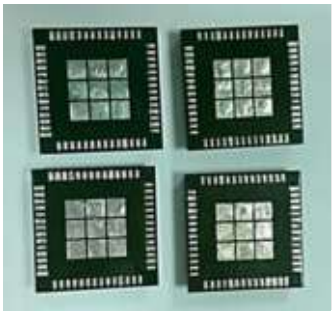

(Not accepted for RMA)

Example SIP with residue solder on the bottom



(Accepted for RMA analysis)

Sterling LWB5+ module without residue solder o

- Remove and clean the residue flux as needed.

15.6.3 Precautions for Use

- Opening/handing/removing must be done on an anti-ESD treated workbench. All workers must also have undergone anti-ESD treatment.
- The devices should be mounted within one year of the date of delivery.
- The LWB5+ modules are MSL level 4

© Copyright 2020 Laird Connectivity, Inc.
All Rights Reserved
Americas: +1-800-492-2320
Europe: +44-1628-858-940
Hong Kong: +852 2923 0610

16 REGULATORY

16.1 Regulatory IDs Summary

Model	US/FCC	Canada/IC	MIC
Sterling LWB5+	SQG-LWB5PLUS	3147A-LWB5PLUS	201-200402

16.2 Certified Antennas

The Sterling LWB5+ was tested with antennas listed in the following table. The OEM can choose a different manufacturer's antenna but must make sure it is of same type and that the gain is lesser than or equal to the antenna that is approved for use*.

***Note:** Japan (MIC) lists applicable antennas on its certificates, so if your antenna is not on the approved list, irrespective of whether it is comparative, it must be added to the certificate before it can be used in Japan.

Manufacturer	Model	Laird Connectivity Part Number	Type	Connector	Peak Gain	
					2.4 GHz	5GHz
Laird Connectivity	2.4/5.5 GHz Dipole Antenna	001-0009	Dipole	RP-SMA	2dBi	2dBi
Laird Connectivity	FlexPIFA	001-0021	PIFA	MHF4L	2.5dBi	3dBi
Laird Connectivity	Mini NanoBlade Flex	EMF2449A1-10MH4L	PCB Dipole	MHF4L	2.78dBi	3.38dBi
Laird Connectivity	NanoBlade	ENB2449A1-10MH4L	PCB Dipole	MHF4L	2dBi	3.9dBi
ACX	AD1608-A2455AAT/LF	N/A	Chip Antenna	MHF4L	1dBi	4dBi
Laird Connectivity	MHF4L Jumper	CARSMF10AMH4L-001	N/A	SMA to MHF4L		

16.3 FCC

Federal Communication Commission Interference Statement

This equipment has been tested and found to comply with the limits for a Class B digital device, pursuant to Part 15 of the FCC Rules. These limits are designed to provide reasonable protection against harmful interference in a residential installation. This equipment generates, uses and can radiate radio frequency energy and, if not installed and used in accordance with the instructions, may cause harmful interference to radio communications. However, there is no guarantee that interference will not occur in a particular installation. If this equipment does cause harmful interference to radio or television reception, which can be determined by turning the equipment off and on, the user is encouraged to try to correct the interference by one of the following measures:

- Reorient or relocate the receiving antenna.
- Increase the separation between the equipment and receiver.
- Connect the equipment into an outlet on a circuit different from that to which the receiver is connected.
- Consult the dealer or an experienced radio/TV technician for help.

FCC Caution: Any changes or modifications not expressly approved by the party responsible for compliance could void the user's authority to operate this equipment.

This device complies with Part 15 of the FCC Rules. Operation is subject to the following two conditions: (1) This device may not cause harmful interference, and (2) this device must accept any interference received, including interference that may cause undesired operation.

© Copyright 2020 Laird Connectivity, Inc.
All Rights Reserved
Americas: +1-800-492-2320
Europe: +44-1628-858-940
Hong Kong: +852 2923 0610

Important Note:

Radiation Exposure Statement

The product complies with the US portable RF exposure limit set forth for an uncontrolled environment and is safe for intended operation as described in this manual. The further RF exposure reduction can be achieved if the product can be kept as far as possible from the user body or set the device to lower output power if such function is available.

Country Code selection feature to be disabled for products marketed to the US/CANADA.

This equipment complies with FCC radiation exposure limits set forth for an uncontrolled environment. This equipment should be installed and operated with a minimum distance of 20 centimeters between the radiator and your body.

This transmitter must not be co-located or operating in conjunction with any other antenna or transmitter.

Integration Instructions for Host Product Manufacturers

Applicable FCC rules to module:

FCC Part 15.247

Summarize the specific operational use conditions:

This device is intended only for OEM integrators under the following condition:

- The transmitter module may not be co-located with any other transmitter or antenna

As long as condition above is met, further transmitter test will not be required. However, the OEM integrator is still responsible for testing their end-product for any additional compliance requirements required with this module installed.

IMPORTANT NOTE: In the event that these conditions cannot be met (for example certain laptop configurations or co-location with another transmitter), then the FCC authorization is no longer considered valid and the FCC ID cannot be used on the final product. In these circumstances, the OEM integrator will be responsible for re-evaluating the end product (including the transmitter) and obtaining a separate FCC authorization. The OEM integrator has to be aware not to provide information to the end user regarding how to install or remove this RF module in the user's manual of the end product which integrates this module.

The end user manual shall include all required regulatory information/warning as show in this manual.

Limited module procedures

Not applicable

Trace antenna designs

Not applicable

RF exposure considerations

Co-located issue shall be met as mentioned in *Summarize the specific operational use conditions*.

Product manufacturer shall provide the following text in the end-product manual:

> ***FCC Radiation Exposure Statement***
>
> *The product complies with the US portable RF exposure limit set forth for an uncontrolled environment and are safe for intended operation as described in this manual. The further RF exposure reduction can be achieved if the product can be kept as far as possible from the user body or set the device to lower output power if such function is available.*

A 20-centimeter separation distance and co-located issue shall be met as mentioned in *Summarize the specific operational use conditions.*

Product manufacturer shall provide the following text in the end-product manual:

© Copyright 2020 Laird Connectivity, Inc.
All Rights Reserved
Americas: +1-800-492-2320
Europe: +44-1628-858-940
Hong Kong: +852 2923 0610

This equipment complies with FCC radiation exposure limits set forth for an uncontrolled environment. This equipment should be installed and operated with a minimum distance of 20 centimeters between the radiator and your body.

Label and Compliance Information

Product manufacturers must provide, with the finished product, a physical or e-label that states the following:

Contains FCC ID: SQG-LWB5PLUS

Information on Test Modes and Additional Testing Requirements

Test tool: wl tool shall be used to set the module to transmit continuously.

Additional Testing, Part 15 Subpart B Disclaimer

The module is only FCC authorized for the specific rule parts listed on the grant, and that the host product manufacturer is responsible for compliance to any other FCC rules that apply to the host not covered by the modular transmitter grant of certification. The final host product still requires Part 15 Subpart B compliance testing with the modular transmitter installed

16.4 ISED Canada

This device contains licence-exempt transmitter(s)/receiver(s) that comply with Innovation, Science and Economic Development Canada's licence-exempt RSS(s). Operation is subject to the following two conditions:

(1) This device may not cause interference

(2) This device must accept any interference, including interference that may cause undesired operation of the device

L'émetteur/récepteur exempt de licence contenu dans le présent appareil est conforme aux CNR d'Innovation, Sciences et Développement économique Canada applicables aux appareils radio exempts de licence. L'exploitation est autorisée aux deux conditions suivantes :

(1) L'appareil ne doit pas produire de brouillage;

(2) L'appareil doit accepter tout brouillage radioélectrique subi, même si le brouillage est susceptible d'en compromettre le fonctionnement.

This radio transmitter (IC: 3147A-LWB5PLUS) has been approved by Innovation, Science and Economic Development Canada to operate with the antenna types listed below, with the maximum permissible gain indicated. Antenna types not included in this list that have a gain greater than the maximum gain indicated for any type listed are strictly prohibited for use with this device.

Le présent émetteur radio (IC: 3147A-LWB5PLUS) a été approuvé par Innovation, Sciences et Développement économique Canada pour fonctionner avec les types d'antenne énumérés ci dessous et ayant un gain admissible maximal. Les types d'antenne non inclus dans cette liste, et dont le gain est supérieur au gain maximal indiqué pour tout type figurant sur la liste, sont strictement interdits pour l'exploitation de l'émetteur.

Radiation Exposure Statement:

This equipment complies with Canada radiation exposure limits set forth for an uncontrolled environment. This equipment should be installed and operated with minimum distance 20cm between the radiator & your body.

Déclaration d'exposition aux radiations:

Cet équipement est conforme Canada limites d'exposition aux radiations dans un environnement non contrôlé. Cet équipement doit être installé et utilisé à distance minimum de 20cm entre le radiateur et votre corps.

This device is intended only for OEM integrators under the following conditions:

1) The transmitter module may not be co-located with any other transmitter or antenna.

As long as the condition above is met, further transmitter testing is not required. However, the OEM integrator is still responsible for testing their end-product for any additional compliance requirements required with this module installed.

Cet appareil est conçu uniquement pour les intégrateurs OEM dans les conditions suivantes:

1) Le module émetteur peut ne pas être coïmplanté avec un autre émetteur ou antenne.

© Copyright 2020 Laird Connectivity, Inc.
All Rights Reserved
Americas: +1-800-492-2320
Europe: +44-1628-858-940
Hong Kong: +852 2923 0610

Tant que les 1 condition ci-dessus sont remplies, des essais supplémentaires sur l'émetteur ne seront pas nécessaires. Toutefois, l'intégrateur OEM est toujours responsable des essais sur son produit final pour toutes exigences de conformité supplémentaires requis pour ce module installé.

IMPORTANT NOTE: In the event that these conditions cannot be met (for example certain laptop configurations or co-location with another transmitter), then the Canada authorization is no longer considered valid and the IC ID cannot be used on the final product. In these circumstances, the OEM integrator will be responsible for re-evaluating the end product (including the transmitter) and obtaining a separate Canada authorization.

NOTE IMPORTANTE: Dans le cas où ces conditions ne peuvent être satisfaites (par exemple pour certaines configurations d'ordinateur portable ou de certaines co-localisation avec un autre émetteur), l'autorisation du Canada n'est plus considéré comme valide et l'ID IC ne peut pas être utilisé sur le produit final. Dans ces circonstances, l'intégrateur OEM sera chargé de réévaluer le produit final (y compris l'émetteur) et l'obtention d'une autorisation distincte au Canada.

End Product Labeling

The final end product must be labeled in a visible area with the following: “Contains IC: 3147A-LWB5PLUS.

Plaque signalétique du produit final

Le produit final doit être étiqueté dans un endroit visible avec l'inscription suivante: "Contient des IC: 3147A-LWB5PLUS.

Manual Information to the End User

The OEM integrator has to be aware not to provide information to the end user regarding how to install or remove this RF module in the user’s manual of the end product which integrates this module.

The end user manual shall include all required regulatory information/warning as show in this manual.

Manuel d'information à l'utilisateur final

L'intégrateur OEM doit être conscient de ne pas fournir des informations à l'utilisateur final quant à la façon d'installer ou de supprimer ce module RF dans le manuel de l'utilisateur du produit final qui intègre ce module.

Le manuel de l'utilisateur final doit inclure toutes les informations réglementaires requises et avertissements comme indiqué dans ce manuel

© Copyright 2020 Laird Connectivity, Inc.
All Rights Reserved
Americas: +1-800-492-2320
Europe: +44-1628-858-940
Hong Kong: +852 2923 0610

16.5 Japan (MIC) Regulatory

The Sterling LWB5+ is approved for use in the Japanese market. The part numbers listed below hold WW type certification. Refer to **ARIB-STD-T66** for further guidance on OEM's responsibilities.

Model	Certificate Number	Antenna
453-00045	201-200402	Chip Antenna
453-00046		MHF4L Connector
453-00047		Trace Pin
453-00048		MHF4L Connector
453-00049		MHF4L Connector

Labeling Requirements

It is recommended that the host device bears a label showing the Japanese "GITEKI" mark and the certification number accompanied by the following statement:

当該機器には電波法に基づく、技術基準適合証明等を受けた特定無線設備を装着している

Translation: *This equipment contains specified radio equipment that has been certified to the Technical Regulation Conformity Certification under the Radio Law.*

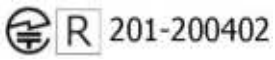

16.6 Australia and New Zealand Regulatory

RCM: Pending Compliant to standards EN 300 328 V1.9.1, AS/NZS 4268: 2012-A1:2013, and EN 55022:2010/AC:2011
If this device is used in a product, the OEM has responsibility to verify compliance of the final end product to the Australia/New Zealand (RCM) Standards. All end-products require their own certification (SDoc). You will not be able to leverage the module certification and ship product into the country.

© Copyright 2020 Laird Connectivity, Inc.
All Rights Reserved
Americas: +1-800-492-2320
Europe: +44-1628-858-940
Hong Kong: +852 2923 0610

16.7 European Union

The integrator must include specific information in the user's guide for the device into which the Sterling-LWB5+ is integrated. In addition to the required FCC and IC statements outlined above, the following Radio Equipment Directive (RED) statements must be added in their entirety and without modification into a prominent place in the user's guide for the device into which the LWB5+ is integrated:

This device complies with the essential requirements of the 2014/53/EU – Radio Equipment Directive (RED). The following test methods have been applied in order to prove presumption of conformity with the essential requirements of the 2014/53/EU – Radio Equipment Directive (RED):

- **EN 62368-1:2014/A11:2017**
  Safety requirements for audio/video, information, and technology equipment
- **EN 300 328 v2.2.2 (2019-07)**
  Electromagnetic compatibility and Radio Spectrum Matters (ERM); Wideband Transmission systems; Data transmission equipment operating in the 2,4 GHz ISM band and using spread spectrum modulation techniques; Harmonized EN covering essential requirements under article 3.2 of the R&TTE Directive
- **EN 62311:2008 | EN 50665:2017 | EN 50385:2017**
  RF exposure
- **EN 301 489-1 v2.2.0 (2017-03)**
  Electromagnetic compatibility and Radio Spectrum Matters (ERM); ElectroMagnetic Compatibility (EMC) standard for radio equipment and services; Part 1: Common technical requirements
- **EN 301 489-17 V3.2.4 (2020-09)**
  Electromagnetic compatibility and Radio spectrum Matters (ERM); ElectroMagnetic Compatibility (EMC) standard for radio equipment and services; Part 17: Specific conditions for 2,4 GHz wideband transmission systems and 5 GHz high performance RLAN equipment
- **EN 301 893 V2.1.1 (2017-05)**
  Electromagnetic compatibility and Radio spectrum Matters (ERM); Broadband Radio Access Networks (BRAN); Specific conditions for 5 GHz high performance RLAN equipment
- **EU 2015/863 (RoHS 3)**
  Declaration of Compliance – EU Directive 2015/863; Reduction of Hazardous Substances (RoHS)

This device is a 2.4 GHz wideband transmission system (transceiver), intended for use in all EU member states and EFTA countries, except in France and Italy where restrictive use applies.

In Italy the end-user should apply for a license at the national spectrum authorities in order to obtain authorization to use the device for setting up outdoor radio links and/or for supplying public access to telecommunications and/or network services.

This device may not be used for setting up outdoor radio links in France and in some areas the RF output power may be limited to 10 mW EIRP in the frequency range of 2454 – 2483.5 MHz. For detailed information the end-user should contact the national spectrum authority in France.

български [Bulgarian]	С настоящото *[име на производителя]* декларира, че това устройство *[вид оборудване]* е в съответствие със съществените изисквания и други приложими разпоредби на Директиви 2014/53/ЕС
Hrvatski [Croatian]	*[naziv proizvođača]* ovim putem izjavljuje da je ovaj uređaj *[vrsta opreme]* sukladan osnovnim zahtjevima i ostalim bitnim odredbama Direktiva 2014/53/EU
Česky [Czech]	*[Jméno výrobce]* tímto prohlašuje, že tento *[typ zařízení]* je ve shodě se základními požadavky a dalšími příslušnými ustanoveními směrnice 2014/53/EU.
Dansk [Danish]	Undertegnede *[fabrikantens navn]* erklærer herved, at følgende udstyr *[udstyrets typebetegnelse]* overholder de væsentlige krav og øvrige relevante krav i direktiv 2014/53/EU.
Deutsch [German]	Hiermit erklärt *[Name des Herstellers]*, dass sich das Gerät *[Gerätetyp]* in Übereinstimmung mit den grundlegenden Anforderungen und den übrigen einschlägigen Bestimmungen der Richtlinie 2014/53/EU befindet.

© Copyright 2020 Laird Connectivity, Inc.
All Rights Reserved
Americas: +1-800-492-2320
Europe: +44-1628-858-940
Hong Kong: +852 2923 0610

Eesti [Estonian]	Käesolevaga kinnitab *[tootja nimi]* seadme *[seadme tüüp]* vastavust direktiivi 2014/53/EL põhinõuetele ja nimetatud direktiivist tulenevatele teistele asjakohastele sätetele.
English	Hereby, *[name of manufacturer]*, declares that this *[type of equipment]* is in compliance with the essential requirements and other relevant provisions of Directive 2014/53/EU.
Español [Spanish]	Por medio de la presente *[nombre del fabricante]* declara que el *[clase de equipo]* cumple con los requisitos esenciales y cualesquiera otras disposiciones aplicables o exigibles de la Directiva 2014/53/UE.
Ελληνική [Greek]	ΜΕ ΤΗΝ ΠΑΡΟΥΣΑ *[όνομα του κατασκευαστή]* ΔΗΛΩΝΕΙ ΟΤΙ *[εξοπλισμού]* ΣΥΜΜΟΡΦΩΝΕΤΑΙ ΠΡΟΣ ΤΙΣ ΟΥΣΙΩΔΕΙΣ ΑΠΑΙΤΗΣΕΙΣ ΚΑΙ ΤΙΣ ΛΟΙΠΕΣ ΣΧΕΤΙΚΕΣ ΔΙΑΤΑΞΕΙΣ ΤΗΣ ΟΔΗΓΙΑΣ 2014/53/ΕΕ.
Français [French]	Par la présente *[nom du fabricant]* déclare que l'appareil *[type d'appareil]* est conforme aux exigences essentielles et aux autres dispositions pertinentes de la directive 2014/53/UE.
Íslenska [Icelandic]	Hér, *[Nafn framleiðanda]*, því yfir að þetta *[gerð búnaðar]* tæki er í samræmi við grunnkröfur og önnur viðeigandi ákvæði tilskipana 2014/53/ ESB
Italiano [Italian]	Con la presente *[nome del costruttore]* dichiara che questo *[tipo di apparecchio]* è conforme ai requisiti essenziali ed alle altre disposizioni pertinenti stabilite dalla direttiva 2014/53/UE.
Latviešu valoda [Latvian]	Aršo*[izgatavotājanosaukums]* deklarē, ka *[iekārtas tips]* atbilstDirektīvas 2014/53/ES būtiskajāmprasībām un citiemar to saistītajiemnoteikumiem.
Lietuvių kalba [Lithuanian]	Šiuo *[gamintojo pavadinimas]* deklaruoja, kad šis *[įrangos tipas]* atitinka esminius reikalavimus ir kitas 2014/53/ES Direktyvos nuostatas.
Nederlands [Dutch]	Hierbij verklaart *[naam van de fabrikant]* dat het toestel *[type van toestel]* in overeenstemming is met de essentiële eisen en de andere relevante bepalingen van richtlijn 2014/53/EU.
Malti [Maltese]	Hawnhekk, *[isem tal-manifattur]*, jiddikjara li dan *[il-mudel tal-prodott]* jikkonforma mal-ħtiġijiet essenzjali u ma provvedimenti oħrajn relevanti li hemm fid-Dirrettiva 2014/53/UE.
Magyar [Hungarian]	Alulírott, *[gyártó neve]* nyilatkozom, hogy a *[... típus]*megfelel a vonatkozó alapvetõ követelményeknek és az 2014/53/EU irányelv egyéb elõírásainak.
Norsk [Norwegian]	Herved *[navnet på produsenten]*, erklærer at denne *[type utstyr]* enheten, er i samsvar med de grunnleggende kravene og andre relevante bestemmelser i direktivene 2014/53/EU
Polski [Polish]	Niniejszym *[nazwa producenta]* oświadcza, że *[nazwa wyrobu]* jest zgodny z zasadniczymi wymogami oraz pozostałymi stosownymi postanowieniami Dyrektywy 2014/53/UE.
Português [Portuguese]	*[Nome do fabricante]* declara que este *[tipo de equipamento]* está conforme com os requisitos essenciais e outras disposições da Directiva 2014/53/UE.
Română [Romanian]	Prin prezenta, *[numele producătorului]* declară că acest dispozitiv *[tipul de echipament]* este în conformitate cu cerințele esențiale și alte prevederi relevante ale Directivelor 2014/53/UE
Slovenščina [Slovenian]	*[Ime proizvajalca]* izjavlja, da je ta *[tip opreme]* v skladu z bistvenimi zahtevami in ostalimi relevantnimi določili direktive 2014/53/EU.
Slovenčina [Slovak]	*[Menovýrobcu]* týmtovyhlasuje, že *[typzariadenia]* spĺňazákladnépožiadavky a všetkypríslušnéustanovenia Smernice 2014/53/EU.
Suomi [Finnish]	*[Valmistaja]* vakuuttaa täten että *[laitteen tyyppimerkintä]* tyyppinen laite on direktiivin 2014/53/EU oleellisten vaatimusten ja sitä koskevien direktiivin muiden ehtojen mukainen.
Svenska [Swedish]	Härmed intygar *[företag]* att denna *[utrustningstyp]* står I överensstämmelse med de väsentliga egenskapskrav och övriga relevanta bestämmelser som framgår av direktiv 2014/53/EU.

© Copyright 2020 Laird Connectivity, Inc.
All Rights Reserved
Americas: +1-800-492-2320
Europe: +44-1628-858-940
Hong Kong: +852 2923 0610

16.7.1 EU Declarations of Conformity

This device complies with the essential requirements of the Radio Equipment directive: 2014/53/EU. The following test methods have been applied to prove presumption of conformity with the essential requirements of the Radio Equipment directive **2014/53/EU**:

Manufacturer	Laird Connectivity
Products	453-00045, 453-00046, 453-00047, 453-00048, 453-00049
Product Description	Sterling-LWB5+ 802.11a/b/g/n/ac Module with Bluetooth 5.0
EU Directives	2014/53/EU – Radio Equipment Directive (RED)

Reference standards used for presumption of conformity:

Article Number	Requirement	Reference standard(s)
3.1a	Low voltage equipment safety	EN 62368-1:2014/A11:2017
	RF Exposure	EN 62311:2008 EN 50665:2017 EN 50385:2017
3.1b	Protection requirements with respect to electromagnetic compatibility	EN 301 489-1 v2.2.3 (2019-11) EN 301 489-17 v3.2.4 (2019-12)
3.2	Means of the efficient use of the radio frequency spectrum	EN 300 328 v2.2.2 (2019-07) EN 301 893 v2.1.1 (2017-05) EN 300 440 v2.1.1

Declaration:

We, Laird Connectivity, declare under our sole responsibility that the essential radio test suites have been carried out and that the above product to which this declaration relates is in conformity with all the applicable essential requirements of Article 3 of the EU Radio Equipment Directive 2014/53/EU, when used for its intended purpose.

The minimum distance between the user and/or any bystander and the radiating structure of the transmitter is 20 cm.

Place of Issue:	Laird Connectivity W66N220 Commerce Court, Cedarburg, WI 53012 USA tel: +1-262-375-4400 fax: +1-262-364-2649
Date of Issue:	November 10, 2020
Name of Authorized Person:	Ryan Urness
Signature of Authorized Person:	

© Copyright 2020 Laird Connectivity, Inc.
All Rights Reserved
Americas: +1-800-492-2320
Europe: +44-1628-858-940
Hong Kong: +852 2923 0610

17 Ordering Information

Part Number	Description
453-00045R	1x1 802.11 a/b/g/n/ac + Bluetooth 5.0 - Integrated Antenna (Tape and Reel)
453-00046R	1x1 802.11 a/b/g/n/ac + Bluetooth 5.0 – MHF4 (Tape and Reel)
453-00047R	1x1 802.11 a/b/g/n/ac + Bluetooth 5.0 – Trace Pin (Tape and Reel)
453-00045C	1x1 802.11 a/b/g/n/ac + Bluetooth 5.0 – Integrated Antenna (Cut Tape)
453-00046C	1x1 802.11 a/b/g/n/ac + Bluetooth 5.0 – MHF4 (Cut Tape)
453-00047C	1x1 802.11 a/b/g/n/ac + Bluetooth 5.0 – Trace Pin (Cut Tape)
453-00045-K1	Development Kit for 1x1 802.11 a/b/g/n/ac + Bluetooth 5.0 - Integrated Antenna
453-00046-K1	Development Kit for 1x1 802.11 a/b/g/n/ac + Bluetooth 5.0 – MHF4

17.1 General Comments

This is a preliminary datasheet. Please check with Laird Connectivity for the latest information before commencing a design. If in doubt, ask.

18 Bluetooth SIG Qualification

18.1 Overview

The LWB5+ Series module is listed on the Bluetooth SIG website as a qualified Controller Subsystem.

Design Name	Owner	Declaration ID	Link to listing on the SIG website
Sterling LWB5+	Laird Connectivity	D050382	https://launchstudio.bluetooth.com/ListingDetails/119009

It is a mandatory requirement of the Bluetooth Special Interest Group (SIG) that every product implementing Bluetooth technology has a Declaration ID. Every Bluetooth design is required to go through the qualification process, even when referencing a Bluetooth Design that already has its own Declaration ID. The Qualification Process requires each company to register as a member of the Bluetooth SIG – www.bluetooth.org

The following is a link to the Bluetooth Registration page: https://www.bluetooth.org/login/register/

For each Bluetooth Design, it is necessary to purchase a Declaration ID. This can be done before starting the new qualification, either through invoicing or credit card payment. The fees for the Declaration ID will depend on your membership status, please refer to the following webpage:

https://www.bluetooth.org/en-us/test-qualification/qualification-overview/fees

For a detailed procedure of how to obtain a new Declaration ID for your design, please refer to the following SIG document, (login is required to views this document):

https://www.bluetooth.org/DocMan/handlers/DownloadDoc.ashx?doc_id=283698&vId=317486

© Copyright 2020 Laird Connectivity, Inc.
All Rights Reserved
Americas: +1-800-492-2320
Europe: +44-1628-858-940
Hong Kong: +852 2923 0610

18.2 Qualification Steps When Referencing a Laird Connectivity Controller Subsystem Design

To qualify your product when referencing a Laird Connectivity Controller Subsystem design, follow these steps:

1. To start a listing, go to: https://www.bluetooth.org/tpg/QLI_SDoc.cfm

   Note: A user name and password are required to access this site.

2. In step 1, select the option, New Listing and Reference a Qualified Design.
3. Enter D050382 in the Controller Subsystem table entry.
4. Enter your complimentary Host Subsystem and optional Profile Subsystem QDID in the table entry.
5. Select your pre-paid Declaration ID from the drop-down menu or go to the Purchase Declaration ID page.

   Note: Unless the Declaration ID is pre-paid or purchased with a credit card, you cannot proceed until the SIG invoice is paid.

6. Once all the relevant sections of step 1 are finished, complete steps 2, 3, and 4 as described in the help document accessible from the site.

   Your new design will be listed on the SIG website and you can print your Certificate and DoC.

For further information please refer to the following training material:

https://www.bluetooth.org/en-us/test-qualification/qualification-overview/listing-process-updates

If you require assistance with the qualification process please contact our recommended Bluetooth Qualification Expert (BQE), Steve Flooks, steve.flooks@eurexuk.com.

© Copyright 2020 Laird Connectivity, Inc.
All Rights Reserved
Americas: +1-800-492-2320
Europe: +44-1628-858-940
Hong Kong: +852 2923 0610

19 Additional Assistance

Please contact your local sales representative or our support team for further assistance:

Laird Connectivity
Support Centre: https://www.lairdconnect.com/resources/support
Email: wireless.support@lairdconnectivity.com
Phone: Americas: +1-800-492-2320
Europe: +44-1628-858-940
Hong Kong: +852 2923 0610
Web: https://www.lairdconnect.com/products

Note: Information contained in this document is subject to change.

© Copyright 2020 Laird Connectivity. All Rights Reserved. Patent pending. Any information furnished by Laird Connectivity and its agents is believed to be accurate and reliable. All specifications are subject to change without notice. Responsibility for the use and application of Laird Connectivity materials or products rests with the end user since Laird Connectivity and its agents cannot be aware of all potential uses. Laird Connectivity makes no warranties as to non-infringement nor as to the fitness, merchantability, or sustainability of any Laird Connectivity materials or products for any specific or general uses. Laird Connectivity or any of its affiliates or agents shall not be liable for incidental or consequential damages of any kind. All Laird Connectivity products are sold pursuant to the Laird Connectivity Terms and Conditions of Sale in effect from time to time, a copy of which will be furnished upon request. Nothing herein provides a license under any Laird Connectivity or any third-party intellectual property right.

© Copyright 2020 Laird Connectivity, Inc.
All Rights Reserved