Data sheet acquired from Cypress Semiconductor Corporation.
Data sheet modified to remove devices not offered.

CY74FCT16952T
CY74FCT162952T
CY74FCT162H952T

SCCS065C - August 1994 - Revised September 2001

16-Bit Registered Transceivers

Features

- **I_{off} supports partial-power-down mode operation**
- **Edge-rate control circuitry for significantly improved noise characteristics**
- **Typical output skew < 250 ps**
- **ESD > 2000V**
- **TSSOP (19.6-mil pitch) and SSOP (25-mil pitch) packages**
- **Industrial temperature range of –40˚C to +85˚C**
- **V_{CC} = 5V ± 10%**

CY74FCT16952T Features:

- **64 mA sink current, 32 mA source current**
- **Typical V_{OLP} (ground bounce) <1.0V at V_{CC} = 5V, T_A = 25˚C**

CY74FCT162952T Features:

- **Balanced 24 mA output drivers**
- **Reduced system switching noise**
- **Typical V_{OLP} (ground bounce) <0.6V at V_{CC} = 5V, T_A= 25˚C**

CY74FCT162H952T Features:

- **Bus hold retains last active state**
- **Eliminates the need for external pull-up or pull-down resistors**

Functional Description

These 16-bit registered transceivers are high-speed, low-power devices. 16-bit operation is achieved by connecting the control lines of the two 8-bit registered transceivers together. For data flow from bus A-to-B, $\overline{CEAB}$ must be LOW to allow data to be stored when CLKAB transitions from LOW-to-HIGH. The stored data will be present on the output when $\overline{OEAB}$ is LOW. Control of data from B-to-A is similar and is controlled by using the $\overline{CEBA}$, CLKBA, and $\overline{OEBA}$ inputs.

This device is fully specified for partial-power-down applications using I_{off}. The I_{off} circuitry disables the outputs, preventing damaging current backflow through the device when it is powered down.

The CY74FCT16952T is ideally suited for driving high-capacitance loads and low-impedance backplanes.

The CY74FCT162952T has 24-mA balanced output drivers with current-limiting resistors in the outputs. This reduces the need for external terminating resistors and provides for minimal undershoot and reduced ground bounce. The CY74FCT162952T is ideal for driving transmission lines.

The CY74FCT162H952T is a 24-mA balanced output part that has “bus hold” on the data inputs. The device retains the input’s last state whenever the input goes to high impedance. This eliminates the need for pull-up/down resistors and prevents floating inputs.

Logic Block Diagrams

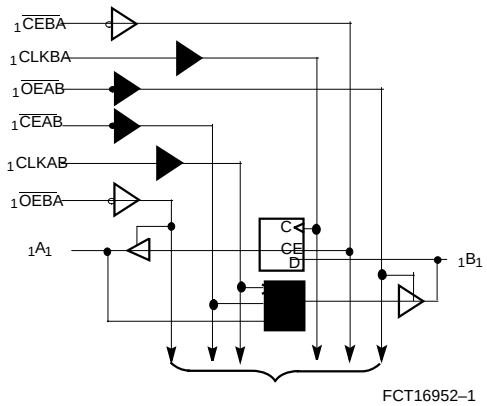

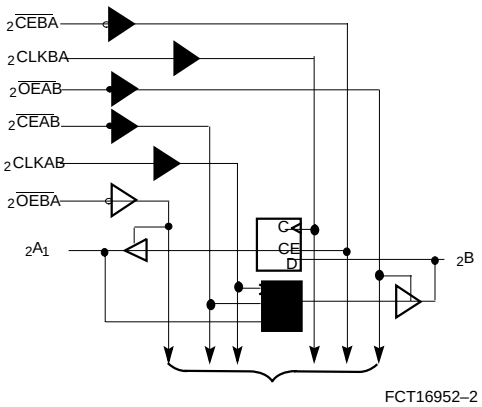

Pin Configuration

SSOP/TSSOP
Top View

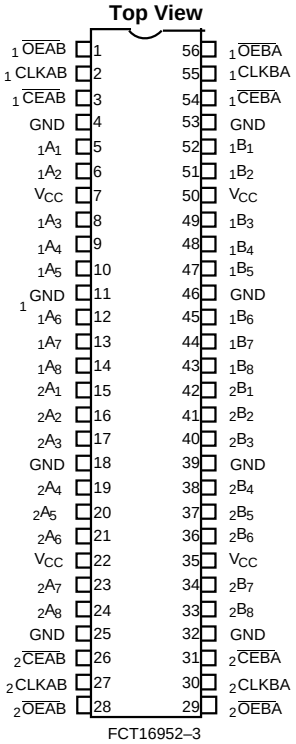

Copyright © 2001, Texas Instruments Incorporated

Pin Description

Name	Description
$\overline{OEAB}$	A-to-B Output Enable Input (Active LOW)
$\overline{OEBA}$	B-to-A Output Enable Input (Active LOW)
$\overline{CEAB}$	A-to-B Clock Enable Input (Active LOW)
$\overline{CEBA}$	B-to-A Clock Enable Input (Active LOW)
CLKAB	A-to-B Clock Input
CLKBA	B-to-A Clock Input
A	A-to-B Data Inputs or B-to-A Three-State Outputs[1]
B	B-to-A Data Inputs or A-to-B Three-State Outputs[1]

Function Table[2, 3]

For A-to-B (Symmetric with B-to-A)

Inputs				Outputs
$\overline{CEAB}$	CLKAB	$\overline{OEAB}$	A	B
H	X	L	X	B[4]
X	L	L	X	B[4]
L	↑	L	L	L
L	↑	L	H	H
X	X	H	X	Z

Maximum Ratings[5, 6]

(Above which the useful life may be impaired. For user guidelines, not tested.)

Storage Temperature ..... –55°C to +125°C

Ambient Temperature with Power Applied..... –55°C to +125°C

DC Input Voltage ..... –0.5V to +7.0V

DC Output Voltage..... –0.5V to +7.0V

DC Output Current (Maximum Sink Current/Pin) .....–60 to +120 mA

Power Dissipation 1.0W

Static Discharge Voltage.....>2001V (per MIL-STD-883, Method 3015)

Operating Range

Range	Ambient Temperature	V_{CC}
Industrial	–40°C to +85°C	5V ± 10%

Notes:

1. On the CY74FCT162H952T these pins have bus hold.
2. A-to-B data flow is shown: B-to-A data flow is similar but uses, $\overline{CEBA}$, CLKBA, and $\overline{OEBA}$.
3. H = HIGH Voltage Level.
   L = LOW Voltage Level.
   X = Don't Care.
   ↑ = LOW-to-HIGH Transition.
   Z = HIGH Impedance.
4. Level of B before the indicated steady-state input conditions were established.
5. Operation beyond the limits set forth may impair the useful life of the device. Unless otherwise noted, these limits are over the operating free-air temperature range.
6. Unused inputs must always be connected to an appropriate logic voltage level, preferably either V_{CC} or ground.

Electrical Characteristics Over the Operating Range

Parameter	Description		Test Conditions		Min.	Typ.[7]	Max.	Unit
V_{IH}	Input HIGH Voltage				2.0			V
V_{IL}	Input LOW Voltage						0.8	V
V_H	Input Hysteresis[8]					100		mV
V_{IK}	Input Clamp Diode Voltage		V_{CC}=Min., I_{IN}= –18 mA			–0.7	–1.2	V
I_{IH}	Input HIGH Current	Standard	V_{CC}=Max., V_I=V_{CC}				±1	µA
		Bus Hold					±100	
I_{IL}	Input LOW Current	Standard	V_{CC}=Max., V_I=GND				±1	µA
		Bus Hold					±100	µA
I_{BBH} I_{BBL}	Bus Hold Sustain Current on Bus Hold Input[9]		V_{CC}=Min.	V_I=2.0V	–50			µA
				V_I=0.8V	+50			µA
I_{BHHO} I_{BHLO}	Bus Hold Overdrive Current on Bus Hold Input[9]		V_{CC}=Max., V_I=1.5V				TBD	mA
I_{OZH}	High Impedance Output Current (Three-State Output pins)		V_{CC}=Max., V_{OUT}=2.7V				±1	µA
I_{OZL}	High Impedance Output Current (Three-State Output pins)		V_{CC}=Max., V_{OUT}=0.5V				±1	µA
I_{OS}	Short Circuit Current[10]		V_{CC}=Max., V_{OUT}=GND		–80	–140	–200	mA
I_O	Output Drive Current[10]		V_{CC}=Max., V_{OUT}=2.5V		–50		–180	mA
I_{OFF}	Power-Off Disable		V_{CC}=0V, V_{OUT}≤4.5V[11]				±1	µA

Output Drive Characteristics for CY74FCT16952T

Parameter	Description	Test Conditions	Min.	Typ.[7]	Max.	Unit
V_{OH}	Output HIGH Voltage	V_{CC}=Min., I_{OH}= –3 mA	2.5	3.5		V
		V_{CC}=Min., I_{OH}= –15 mA	2.4	3.5		V
		V_{CC}=Min., I_{OH}= –32 mA	2.0	3.0		V
V_{OL}	Output LOW Voltage	V_{CC}=Min., I_{OL}=64 mA		0.2	0.55	V

Output Drive Characteristics for CY74FCT162952T, CY74FCT162H952T

Parameter	Description	Test Conditions	Min.	Typ.[7]	Max.	Unit
I_{ODL}	Output LOW Current[10]	V_{CC}=5V, V_{IN}=V_{IH} or V_{IL}, V_{OUT}=1.5V	60	115	150	mA
I_{ODH}	Output HIGH Current[10]	V_{CC}=5V, V_{IN}=V_{IH} or V_{IL}, V_{OUT}=1.5V	–60	–115	–150	mA
V_{OH}	Output HIGH Voltage	V_{CC}=Min., I_{OH}= –24 mA	2.4	3.3		V
V_{OL}	Output LOW Voltage	V_{CC}=Min., I_{OL}=24 mA		0.3	0.55	V

Capacitance[8] (T_A = +25˚C, f = 1.0 MHz)

Parameter	Description	Test Conditions	Typ.[7]	Max.	Unit
C_{IN}	Input Capacitance	V_{IN} = 0V	4.5	6.0	pF
C_{OUT}	Output Capacitance	V_{OUT} = 0V	5.5	8.0	pF

Note:

7. Typical values are at V_{CC}= 5.0V, T_A= +25˚C ambient.
8. This parameter is specified but not tested.
9. Pins with bus hold are described in the Pin Description.
10. Not more than one output should be shorted at a time. Duration of short should not exceed one second. The use of high-speed test apparatus and/or sample and hold techniques are preferable in order to minimize internal chip heating and more accurately reflect operational values. Otherwise prolonged shorting of a high output may raise the chip temperature well above normal and thereby cause invalid readings in other parametric tests. In any sequence of parameter tests, I_{OS} tests should be performed last.
11. Tested at +25˚C.

Power Supply Characteristics

Parameter	Description	Test Conditions[12]		Typ.[7]	Max.	Unit
I_{CC}	Quiescent Power Supply Current	V_{CC}=Max.	$V_{IN}\leq$0.2V $V_{IN}\geq V_{CC}$–0.2V	5	500	μA
ΔI_{CC}	Quiescent Power Supply Current (TTL inputs HIGH)	V_{CC}=Max.	V_{IN}=3.4V[13]	0.5	1.5	mA
I_{CCD}	Dynamic Power Supply Current[14]	V_{CC}=Max., One Input Toggling, 50% Duty Cycle, Outputs Open, $\overline{OEAB}$ or $\overline{OEBA}$=GND	$V_{IN}=V_{CC}$ or V_{IN}=GND	75	120	μA/MHz
I_C	Total Power Supply Current[15]	V_{CC}=Max., F_1=5 MHz, F_0 = 10 MHz (CLKAB) $\overline{OEAB}$ = $\overline{CEAB}$ = GND $\overline{OEBA}$ = V_{CC} 50% Duty Cycle, Outputs Open, One Bit Toggling	$V_{IN}=V_{CC}$ or V_{IN}=GND	0.8	1.7	mA
			V_{IN}=3.4V or V_{IN}=GND	1.3	3.2	
		V_{CC}=Max., f_0=10 MHz (CLKAB) f_1=2.5 MHz, $\overline{OEAB}$ = $\overline{CEAB}$ = GND $\overline{OEBA}$ = V_{CC} 50% Duty Cycle, Outputs Open, Sixteen Bit Toggling	$V_{IN}=V_{CC}$ or V_{IN}=GND	3.8	6.5[16]	
			V_{IN}=3.4V or V_{IN}=GND	8.3	20.0[16]	

Notes:

12. For conditions shown as Max. or Min., use appropriate value specified under Electrical Characteristics for the applicable device type.
13. Per TTL driven input (V_{IN}=3.4V); all other inputs at V_{CC} or GND.
14. This parameter is not directly testable, but is derived for use in Total Power Supply calculations.
15. $I_C = I_{QUIESCENT} + I_{INPUTS} + I_{DYNAMIC}$
    $I_C = I_{CC}+\Delta I_{CC}D_HN_T+I_{CCD}(f_0/2 + f_1N_1)$
    I_{CC} = Quiescent Current with CMOS input levels
    ΔI_{CC} = Power Supply Current for a TTL HIGH input (V_{IN}=3.4V)
    D_H = Duty Cycle for TTL inputs HIGH
    N_T = Number of TTL inputs at D_H
    I_{CCD} = Dynamic Current caused by an input transition pair (HLH or LHL)
    f_0 = Clock frequency for registered devices, otherwise zero
    f_1 = Input signal frequency
    N_1 = Number of inputs changing at f_1
    All currents are in milliamps and all frequencies are in megahertz.
16. Values for these conditions are examples of the I_{CC} formula. These limits are specified but not tested.

Switching Characteristics Over the Operating Range[17]

Parameter	Description	CY74FCT16952AT CY74FCT162952AT CY74FCT162H952AT		CY74FCT162952BT		Unit	Fig. No.[18]
		Min.	Max.	Min.	Max.		
t_{PLH} t_{PHL}	Propagation Delay CLKAB, CLKBA to B, A	2.0	10.0	2.0	7.5	ns	1, 5
t_{PZH} t_{PZL}	Output Enable Time $\overline{OEBA}$, $\overline{OEAB}$ to A, B	1.5	10.5	1.5	8.0	ns	1, 7, 8
t_{PHZ} t_{PLZ}	Output Disable Time $\overline{OEBA}$, $\overline{OEAB}$ to A, B	1.5	10.0	1.5	7.5	ns	1, 7, 8
t_{SU}	Set-Up Time, HIGH or LOW A, B to CLKAB, CLKBA	2.5	—	2.5	—	ns	4
t_H	Hold Time, HIGH or LOW A, B to CLKAB, CLKBA	2.0	—	1.5	—	ns	4
t_{SU}	Set-Up Time, HIGH or LOW $\overline{CEAB}$, $\overline{CEBA}$ to CLKAB, CLKBA	3.0	—	3.0	—	ns	4
t_H	Hold Time, HIGH or LOW $\overline{CEAB}$, $\overline{CEBA}$ to CLKAB, CLKBA	2.0	—	2.0	—	ns	4
t_W	Pulse Width HIGH or LOW CLKAB or CLKBA[19]	3.0	—	3.0	—	ns	5
$t_{SK(O)}$	Output Skew[20]	—	0.5	—	0.5	ns	—

Parameter	Description	CY74FCT16952CT CY74FCT162H952CT		Unit	Fig. No.[18]
		Min.	Max.		
t_{PLH} t_{PHL}	Propagation Delay CLKAB, CLKBA to B, A	2.0	6.3	ns	1, 5
t_{PZH} t_{PZL}	Output Enable Time $\overline{OEBA}$, $\overline{OEAB}$ to A, B	1.5	7.0	ns	1, 7, 8
t_{PHZ} t_{PLZ}	Output Disable Time $\overline{OEBA}$, $\overline{OEAB}$ to A, B	1.5	6.5	ns	1, 7, 8
t_{SU}	Set-Up Time, HIGH or LOW A, B to CLKAB, CLKBA	2.5	—	ns	4
t_H	Hold Time, HIGH or LOW A, B to CLKAB, CLKBA	1.5	—	ns	4
t_{SU}	Set-Up Time, HIGH or LOW $\overline{CEAB}$, $\overline{CEBA}$ to CLKAB, CLKBA	3.0	—	ns	4
t_H	Hold Time, HIGH or LOW $\overline{CEAB}$, $\overline{CEBA}$ to CLKAB, CLKBA	2.0	—	ns	4
t_W	Pulse Width HIGH or LOW CLKAB or CLKBA[19]	3.0	—	ns	5
$t_{SK(O)}$	Output Skew[20]	—	0.5	ns	—

Notes:

17. Minimum limits are specified but not tested on Propagation Delays.
18. See “Parameter Measurement Information” in the General Information section.
19. This parameter is specified but not tested.
20. Skew between any two outputs of the same package switching in the same direction. This parameter is ensured by design.

Ordering Information CY74FCT16952

Speed (ns)	Ordering Code	Package Name	Package Type	Operating Range
6.3	CY74FCT16952CTPACT	Z56	56-Lead (240-Mil) TSSOP	Industrial
10.0	CY74FCT16952ATPVC/PVCT	O56	56-Lead (300-Mil) SSOP	Industrial

Ordering Information CY74FCT162952

Speed (ns)	Ordering Code	Package Name	Package Type	Operating Range
7.5	CY74FCT162952BTPVC	O56	56-Lead (300-Mil) SSOP	Industrial
	74FCT162952BTPVCT	O56	56-Lead (300-Mil) SSOP	
10.0	74FCT162952ATPACT	Z56	56-Lead (240-Mil) TSSOP	Industrial

Ordering Information CY74FCT162H952

Speed (ns)	Ordering Code	Package Name	Package Type	Operating Range
6.3	74FCT162H952CTPVC/PVCT	O56	56-Lead (300-Mil) SSOP	Industrial
10.0	74FCT162H952ATPACT	Z56	56-Lead (240-Mil) TSSOP	Industrial

Package Diagrams

56-Lead Shrunk Small Outline Package O56

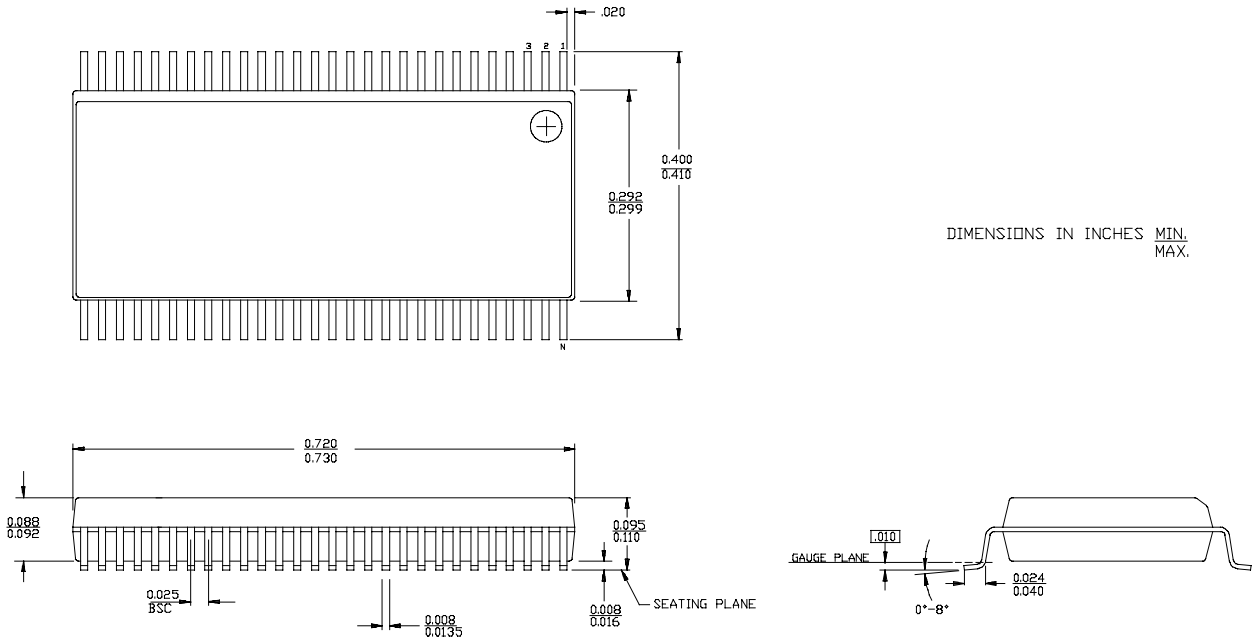

56-Lead Thin Shrunk Small Outline Package Z56

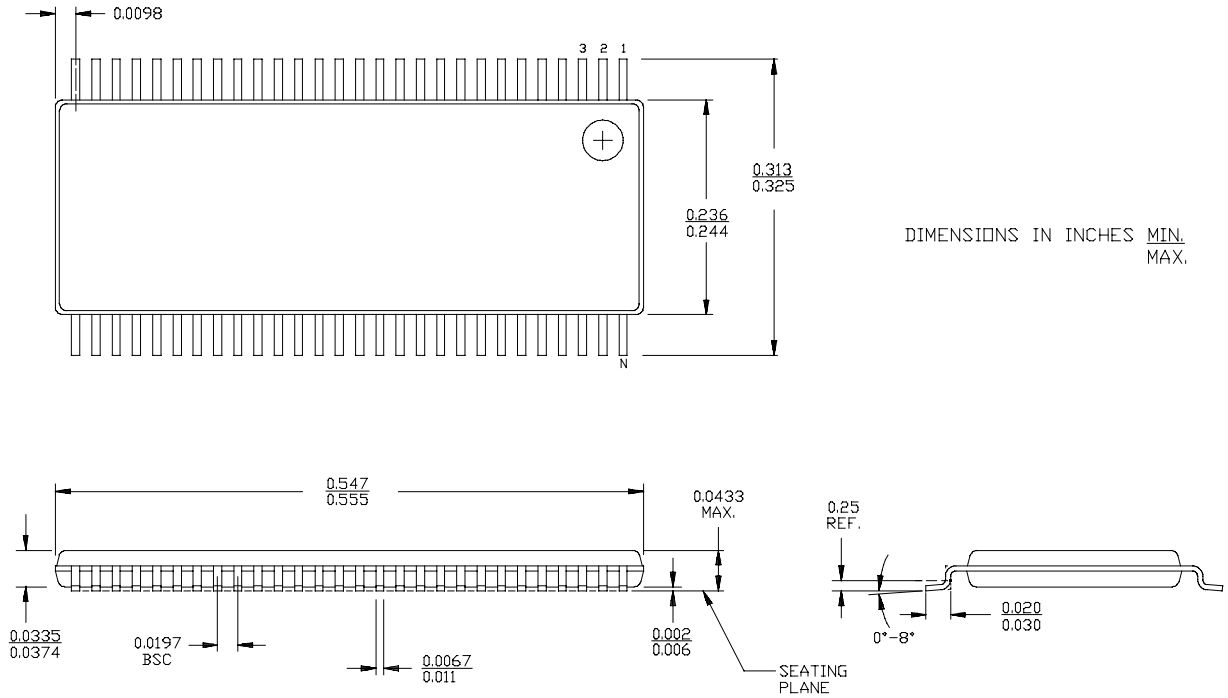

PACKAGING INFORMATION

Orderable Device	Status [1]	Package Type	Package Drawing	Pins	Package Qty	Eco Plan [2]	Lead/Ball Finish	MSL Peak Temp [3]
74FCT162952BTPVCG4	ACTIVE	SSOP	DL	56	20	Green (RoHS & no Sb/Br)	CU NIPDAU	Level-1-260C-UNLIM
74FCT162952ETPACT	OBSOLETE	TSSOP	DGG	56		TBD	Call TI	Call TI
74FCT162952ETPVCT	OBSOLETE	SSOP	DL	56		TBD	Call TI	Call TI
74FCT162H952ETPAC	OBSOLETE	TSSOP	DGG	56		TBD	Call TI	Call TI
74FCT162H952ETPACT	OBSOLETE	TSSOP	DGG	56		TBD	Call TI	Call TI
74FCT16952ATPVCG4	ACTIVE	SSOP	DL	56	20	Green (RoHS & no Sb/Br)	CU NIPDAU	Level-1-260C-UNLIM
74FCT16952CTPACTE4	ACTIVE	TSSOP	DGG	56	2000	Green (RoHS & no Sb/Br)	CU NIPDAU	Level-1-260C-UNLIM
74FCT16952CTPACTG4	ACTIVE	TSSOP	DGG	56	2000	Green (RoHS & no Sb/Br)	CU NIPDAU	Level-1-260C-UNLIM
CY74FCT162952BTPVC	ACTIVE	SSOP	DL	56	20	Green (RoHS & no Sb/Br)	CU NIPDAU	Level-1-260C-UNLIM
CY74FCT162952ETPAC	OBSOLETE	TSSOP	DGG	56		TBD	Call TI	Call TI
CY74FCT162952ETPVC	OBSOLETE	SSOP	DL	56		TBD	Call TI	Call TI
CY74FCT16952ATPVC	ACTIVE	SSOP	DL	56	20	Green (RoHS & no Sb/Br)	CU NIPDAU	Level-1-260C-UNLIM
CY74FCT16952CTPACT	ACTIVE	TSSOP	DGG	56	2000	Green (RoHS & no Sb/Br)	CU NIPDAU	Level-1-260C-UNLIM
CY74FCT16952ETPVC	OBSOLETE	SSOP	DL	56		TBD	Call TI	Call TI
CY74FCT16952ETPVCT	OBSOLETE	SSOP	DL	56		TBD	Call TI	Call TI

[1] The marketing status values are defined as follows:
ACTIVE: Product device recommended for new designs.
LIFEBUY: TI has announced that the device will be discontinued, and a lifetime-buy period is in effect.
NRND: Not recommended for new designs. Device is in production to support existing customers, but TI does not recommend using this part in a new design.
PREVIEW: Device has been announced but is not in production. Samples may or may not be available.
OBSOLETE: TI has discontinued the production of the device.

[2] Eco Plan - The planned eco-friendly classification: Pb-Free (RoHS), Pb-Free (RoHS Exempt), or Green (RoHS & no Sb/Br) - please check http://www.ti.com/productcontent for the latest availability information and additional product content details.
TBD: The Pb-Free/Green conversion plan has not been defined.
Pb-Free (RoHS): TI's terms "Lead-Free" or "Pb-Free" mean semiconductor products that are compatible with the current RoHS requirements for all 6 substances, including the requirement that lead not exceed 0.1% by weight in homogeneous materials. Where designed to be soldered at high temperatures, TI Pb-Free products are suitable for use in specified lead-free processes.
Pb-Free (RoHS Exempt): This component has a RoHS exemption for either 1) lead-based flip-chip solder bumps used between the die and package, or 2) lead-based die adhesive used between the die and leadframe. The component is otherwise considered Pb-Free (RoHS compatible) as defined above.
Green (RoHS & no Sb/Br): TI defines "Green" to mean Pb-Free (RoHS compatible), and free of Bromine (Br) and Antimony (Sb) based flame retardants (Br or Sb do not exceed 0.1% by weight in homogeneous material)

[3] MSL, Peak Temp. -- The Moisture Sensitivity Level rating according to the JEDEC industry standard classifications, and peak solder temperature.

Important Information and Disclaimer: The information provided on this page represents TI's knowledge and belief as of the date that it is provided. TI bases its knowledge and belief on information provided by third parties, and makes no representation or warranty as to the accuracy of such information. Efforts are underway to better integrate information from third parties. TI has taken and continues to take reasonable steps to provide representative and accurate information but may not have conducted destructive testing or chemical analysis on incoming materials and chemicals. TI and TI suppliers consider certain information to be proprietary, and thus CAS numbers and other limited information may not be available for release.

In no event shall TI's liability arising out of such information exceed the total purchase price of the TI part(s) at issue in this document sold by TI to Customer on an annual basis.

TAPE AND REEL INFORMATION

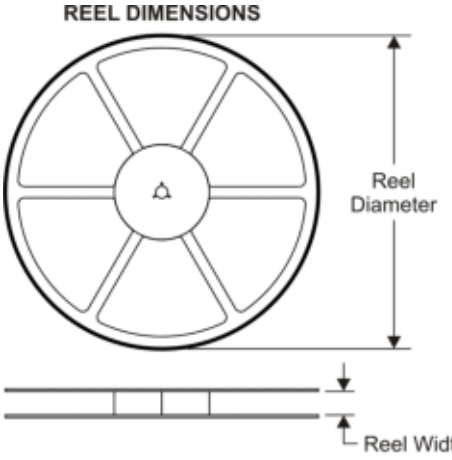

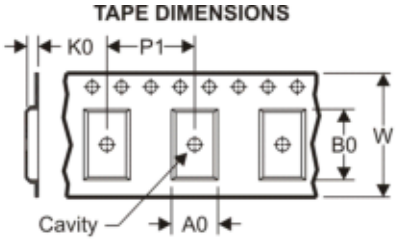

A0	Dimension designed to accommodate the component width
B0	Dimension designed to accommodate the component length
K0	Dimension designed to accommodate the component thickness
W	Overall width of the carrier tape
P1	Pitch between successive cavity centers

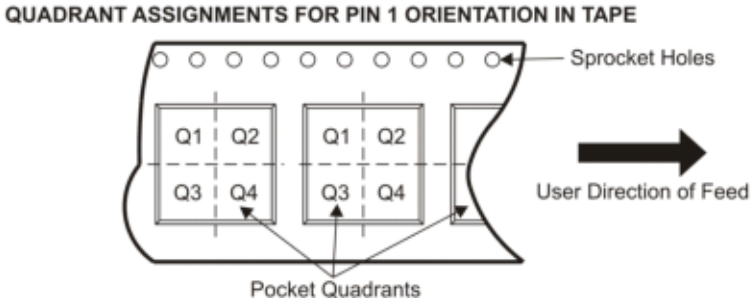

*All dimensions are nominal

Device	Package Type	Package Drawing	Pins	SPQ	Reel Diameter (mm)	Reel Width W1 (mm)	A0 (mm)	B0 (mm)	K0 (mm)	P1 (mm)	W (mm)	Pin1 Quadrant
CY74FCT16952CTPACT	TSSOP	DGG	56	2000	330.0	24.4	8.6	15.6	1.8	12.0	24.0	Q1

TAPE AND REEL BOX DIMENSIONS

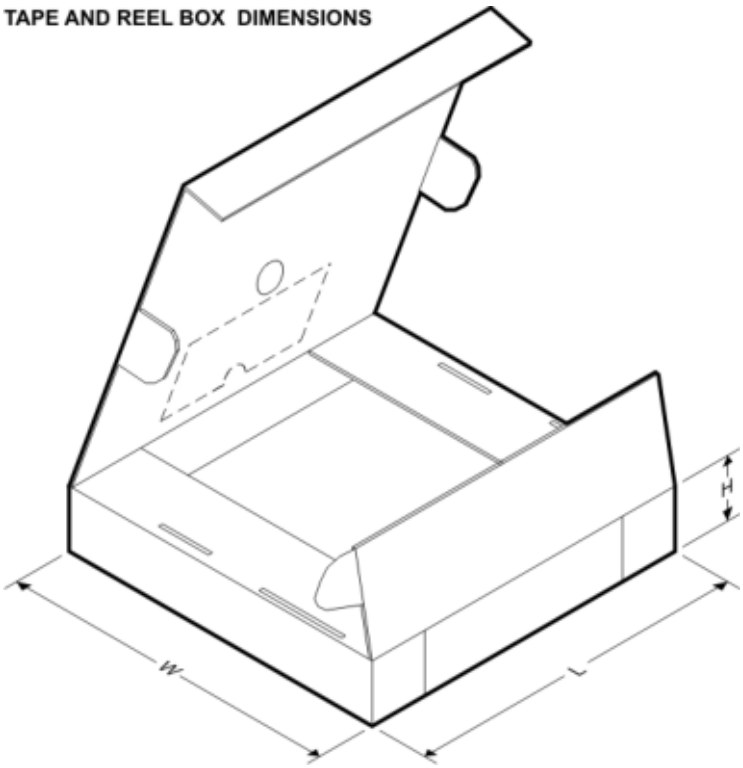

*All dimensions are nominal

Device	Package Type	Package Drawing	Pins	SPQ	Length (mm)	Width (mm)	Height (mm)
CY74FCT16952CTPACT	TSSOP	DGG	56	2000	346.0	346.0	41.0

DL (R-PDSO-G**)

PLASTIC SMALL-OUTLINE PACKAGE

48 PINS SHOWN

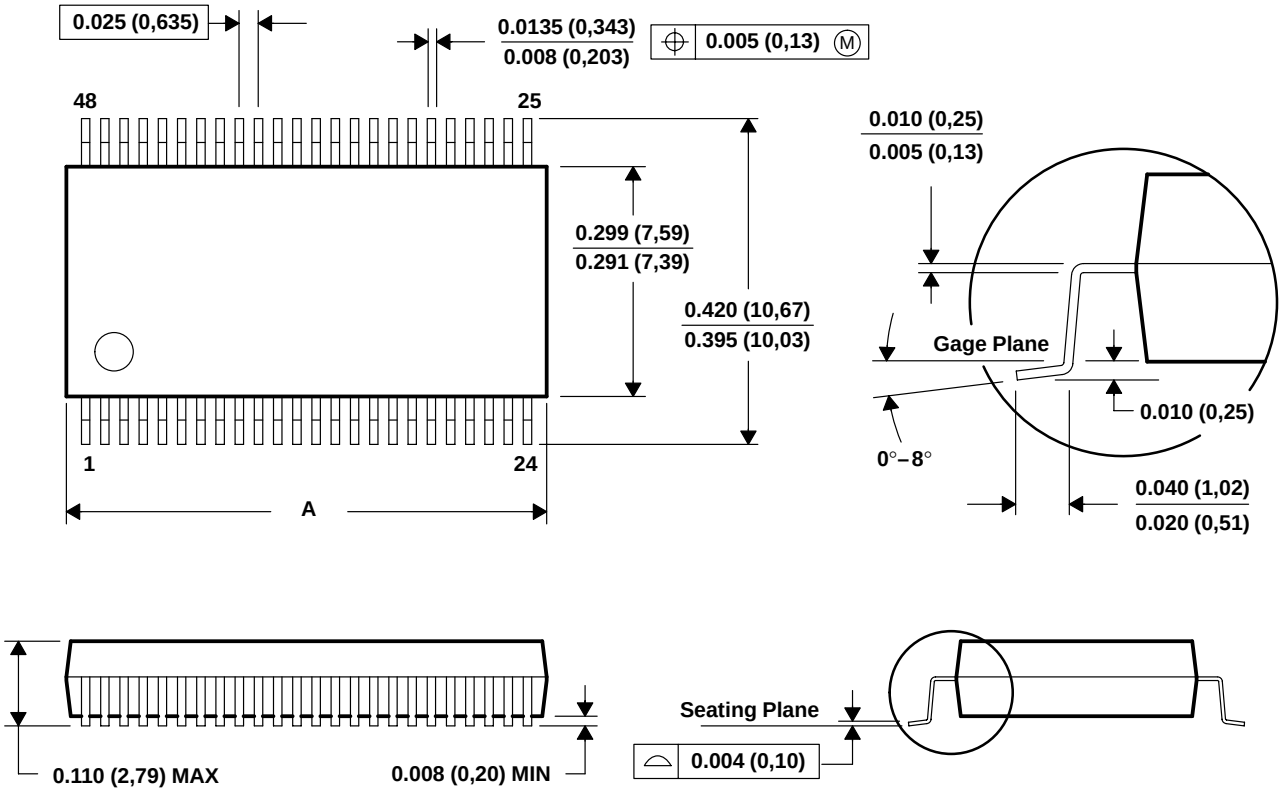

DIM \ PINS **	28	48	56
A MAX	0.380 (9,65)	0.630 (16,00)	0.730 (18,54)
A MIN	0.370 (9,40)	0.620 (15,75)	0.720 (18,29)

4040048/E 12/01

NOTES: A. All linear dimensions are in inches (millimeters).
B. This drawing is subject to change without notice.
C. Body dimensions do not include mold flash or protrusion not to exceed 0.006 (0,15).
D. Falls within JEDEC MO-118

DGG (R-PDSO-G)** **PLASTIC SMALL-OUTLINE PACKAGE**

48 PINS SHOWN

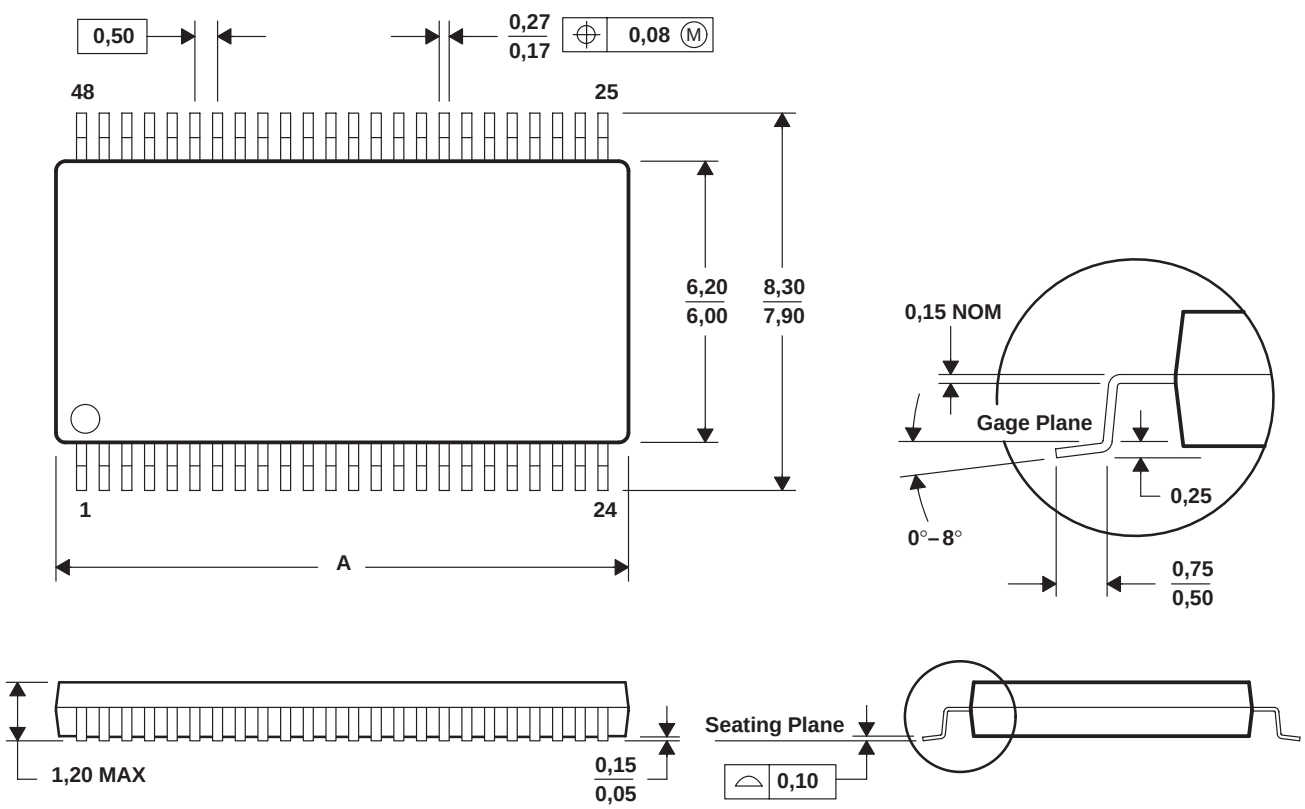

DIM \ PINS **	48	56	64
A MAX	12,60	14,10	17,10
A MIN	12,40	13,90	16,90

4040078/F 12/97

NOTES: A. All linear dimensions are in millimeters.
B. This drawing is subject to change without notice.
C. Body dimensions do not include mold protrusion not to exceed 0,15.
D. Falls within JEDEC MO-153

PACKAGING INFORMATION

Orderable Device	Status (1)	Package Type	Package Drawing	Pins	Package Qty	Eco Plan (2)	Lead/Ball Finish (6)	MSL Peak Temp (3)	Op Temp (°C)	Device Marking (4/5)	Samples
74FCT162952ETPACT	OBSOLETE	TSSOP	DGG	56		TBD	Call TI	Call TI	-40 to 85		
74FCT162952ETPVCT	OBSOLETE	SSOP	DL	56		TBD	Call TI	Call TI	-40 to 85		
74FCT162H952ETPAC	OBSOLETE	TSSOP	DGG	56		TBD	Call TI	Call TI	-40 to 85		
74FCT162H952ETPACT	OBSOLETE	TSSOP	DGG	56		TBD	Call TI	Call TI	-40 to 85		
74FCT16952ATPVCG4	ACTIVE	SSOP	DL	56	20	Green (RoHS & no Sb/Br)	CU NIPDAU	Level-1-260C-UNLIM	-40 to 85	FCT16952A	Samples
CY74FCT162952BTPVC	ACTIVE	SSOP	DL	56	20	Green (RoHS & no Sb/Br)	CU NIPDAU	Level-1-260C-UNLIM	-40 to 85	FCT162952B	Samples
CY74FCT162952ETPAC	OBSOLETE	TSSOP	DGG	56		TBD	Call TI	Call TI	-40 to 85		
CY74FCT162952ETPVC	OBSOLETE	SSOP	DL	56		TBD	Call TI	Call TI	-40 to 85		
CY74FCT16952ATPVC	ACTIVE	SSOP	DL	56	20	Green (RoHS & no Sb/Br)	CU NIPDAU	Level-1-260C-UNLIM	-40 to 85	FCT16952A	Samples
CY74FCT16952CTPACT	ACTIVE	TSSOP	DGG	56	2000	Green (RoHS & no Sb/Br)	CU NIPDAU	Level-1-260C-UNLIM	-40 to 85	FCT16952C	Samples
CY74FCT16952ETPVC	OBSOLETE	SSOP	DL	56		TBD	Call TI	Call TI	-40 to 85		
CY74FCT16952ETPVCT	OBSOLETE	SSOP	DL	56		TBD	Call TI	Call TI	-40 to 85		

(1) The marketing status values are defined as follows:
ACTIVE: Product device recommended for new designs.
LIFEBUY: TI has announced that the device will be discontinued, and a lifetime-buy period is in effect.
NRND: Not recommended for new designs. Device is in production to support existing customers, but TI does not recommend using this part in a new design.
PREVIEW: Device has been announced but is not in production. Samples may or may not be available.
OBSOLETE: TI has discontinued the production of the device.

(2) Eco Plan - The planned eco-friendly classification: Pb-Free (RoHS), Pb-Free (RoHS Exempt), or Green (RoHS & no Sb/Br) - please check http://www.ti.com/productcontent for the latest availability information and additional product content details.
TBD: The Pb-Free/Green conversion plan has not been defined.
Pb-Free (RoHS): TI's terms "Lead-Free" or "Pb-Free" mean semiconductor products that are compatible with the current RoHS requirements for all 6 substances, including the requirement that lead not exceed 0.1% by weight in homogeneous materials. Where designed to be soldered at high temperatures, TI Pb-Free products are suitable for use in specified lead-free processes.
Pb-Free (RoHS Exempt): This component has a RoHS exemption for either 1) lead-based flip-chip solder bumps used between the die and package, or 2) lead-based die adhesive used between the die and leadframe. The component is otherwise considered Pb-Free (RoHS compatible) as defined above.
Green (RoHS & no Sb/Br): TI defines "Green" to mean Pb-Free (RoHS compatible), and free of Bromine (Br) and Antimony (Sb) based flame retardants (Br or Sb do not exceed 0.1% by weight in homogeneous material)

(3) MSL, Peak Temp. - The Moisture Sensitivity Level rating according to the JEDEC industry standard classifications, and peak solder temperature.

(4) There may be additional marking, which relates to the logo, the lot trace code information, or the environmental category on the device.

(5) Multiple Device Markings will be inside parentheses. Only one Device Marking contained in parentheses and separated by a "~" will appear on a device. If a line is indented then it is a continuation of the previous line and the two combined represent the entire Device Marking for that device.

(6) Lead/Ball Finish - Orderable Devices may have multiple material finish options. Finish options are separated by a vertical ruled line. Lead/Ball Finish values may wrap to two lines if the finish value exceeds the maximum column width.

Important Information and Disclaimer: The information provided on this page represents TI's knowledge and belief as of the date that it is provided. TI bases its knowledge and belief on information provided by third parties, and makes no representation or warranty as to the accuracy of such information. Efforts are underway to better integrate information from third parties. TI has taken and continues to take reasonable steps to provide representative and accurate information but may not have conducted destructive testing or chemical analysis on incoming materials and chemicals. TI and TI suppliers consider certain information to be proprietary, and thus CAS numbers and other limited information may not be available for release.

In no event shall TI's liability arising out of such information exceed the total purchase price of the TI part(s) at issue in this document sold by TI to Customer on an annual basis.

TAPE AND REEL INFORMATION

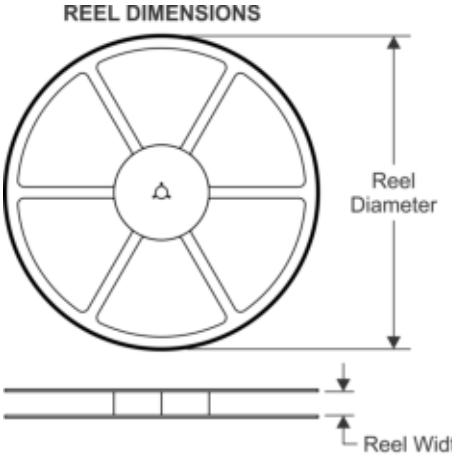

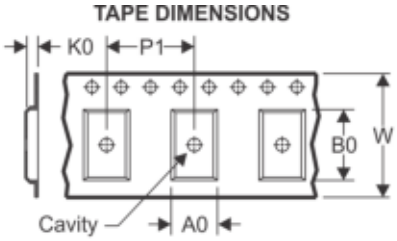

A0	Dimension designed to accommodate the component width
B0	Dimension designed to accommodate the component length
K0	Dimension designed to accommodate the component thickness
W	Overall width of the carrier tape
P1	Pitch between successive cavity centers

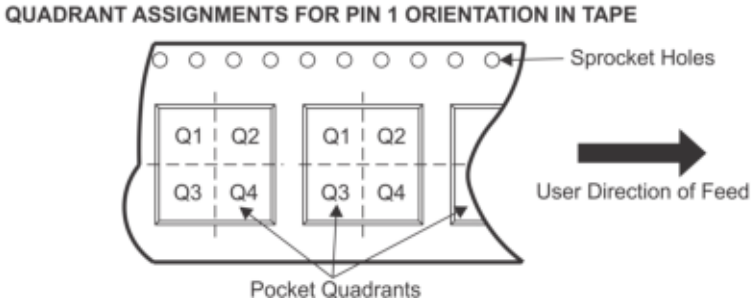

*All dimensions are nominal

Device	Package Type	Package Drawing	Pins	SPQ	Reel Diameter (mm)	Reel Width W1 (mm)	A0 (mm)	B0 (mm)	K0 (mm)	P1 (mm)	W (mm)	Pin1 Quadrant
CY74FCT16952CTPACT	TSSOP	DGG	56	2000	330.0	24.4	8.6	15.6	1.8	12.0	24.0	Q1

TAPE AND REEL BOX DIMENSIONS

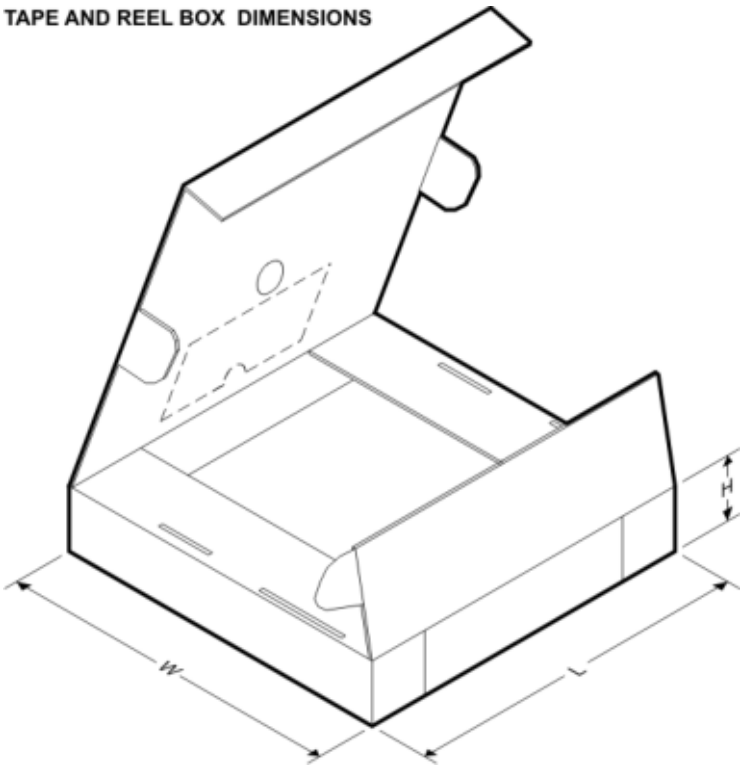

*All dimensions are nominal

Device	Package Type	Package Drawing	Pins	SPQ	Length (mm)	Width (mm)	Height (mm)
CY74FCT16952CTPACT	TSSOP	DGG	56	2000	367.0	367.0	45.0

DL (R–PDSO–G56) PLASTIC SMALL–OUTLINE PACKAGE

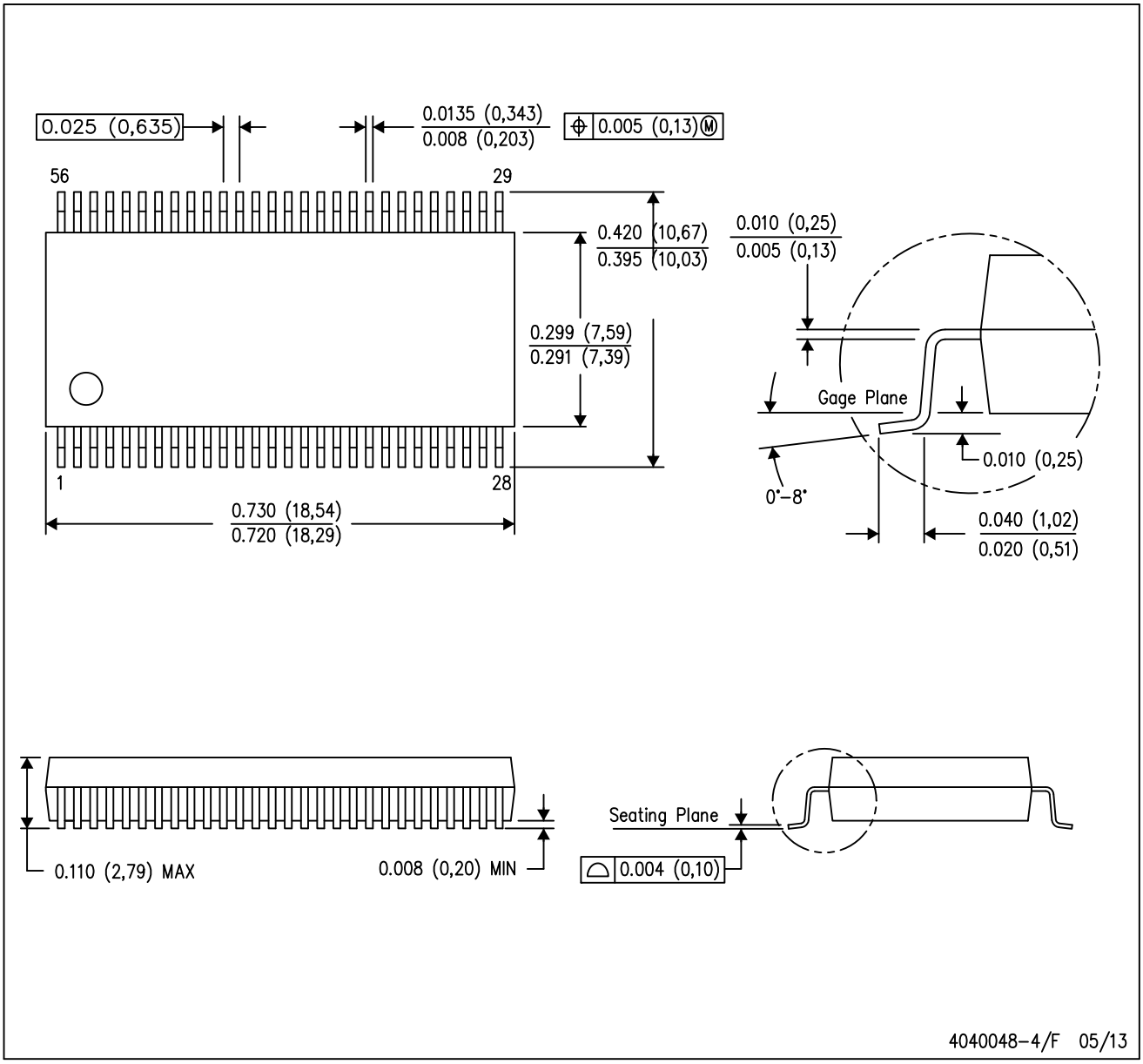

NOTES:
A. All linear dimensions are in inches (millimeters).
B. This drawing is subject to change without notice.
C. Body dimensions do not include mold flash or protrusion not to exceed 0.006 (0,15).
D. Falls within JEDEC MO–118

PowerPAD is a trademark of Texas Instruments.

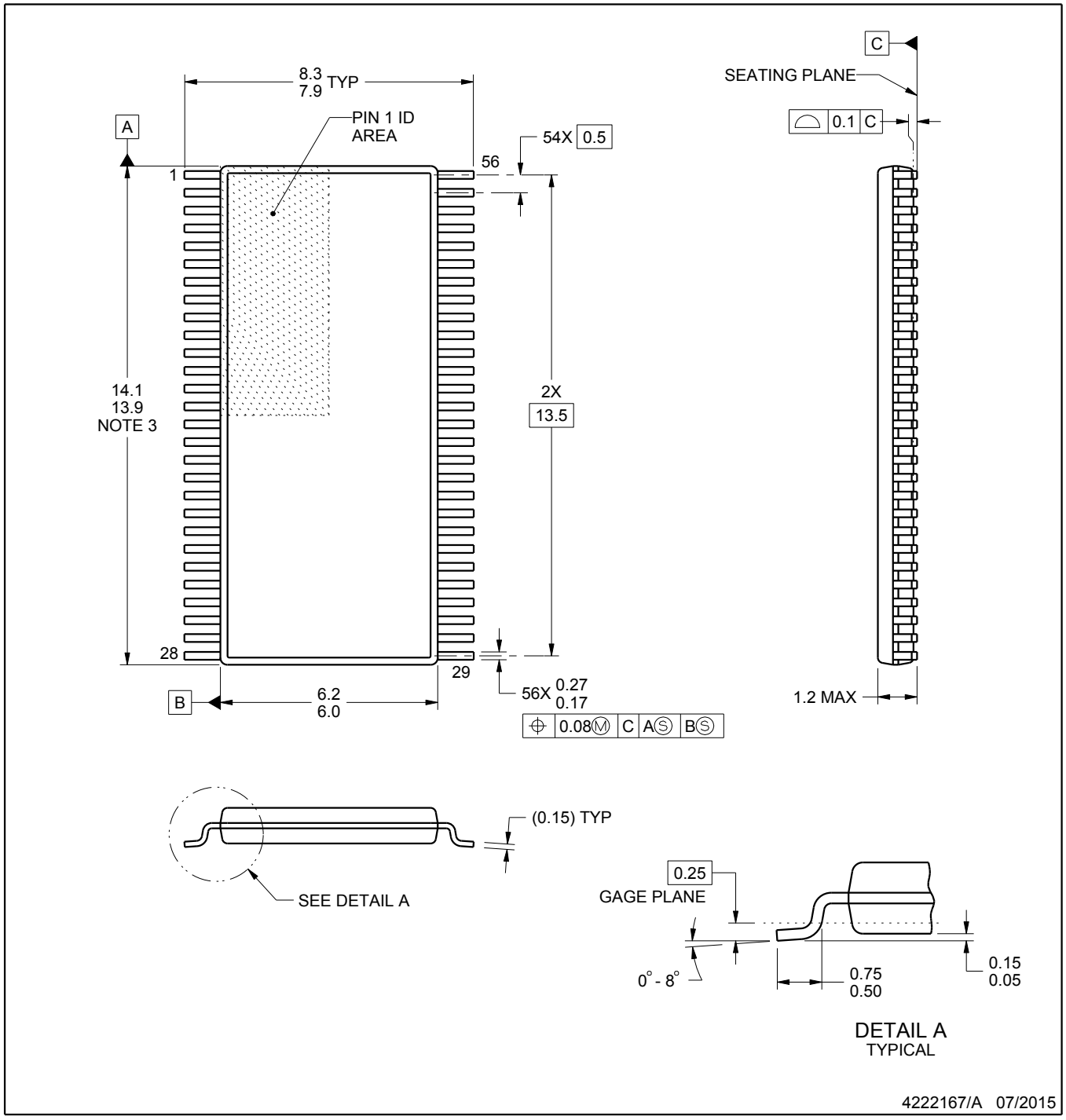

NOTES:

1. All linear dimensions are in millimeters. Any dimensions in parenthesis are for reference only. Dimensioning and tolerancing per ASME Y14.5M.
2. This drawing is subject to change without notice.
3. This dimension does not include mold flash, protrusions, or gate burrs. Mold flash, protrusions, or gate burrs shall not exceed 0.15 mm per side.
4. Reference JEDEC registration MO-153.

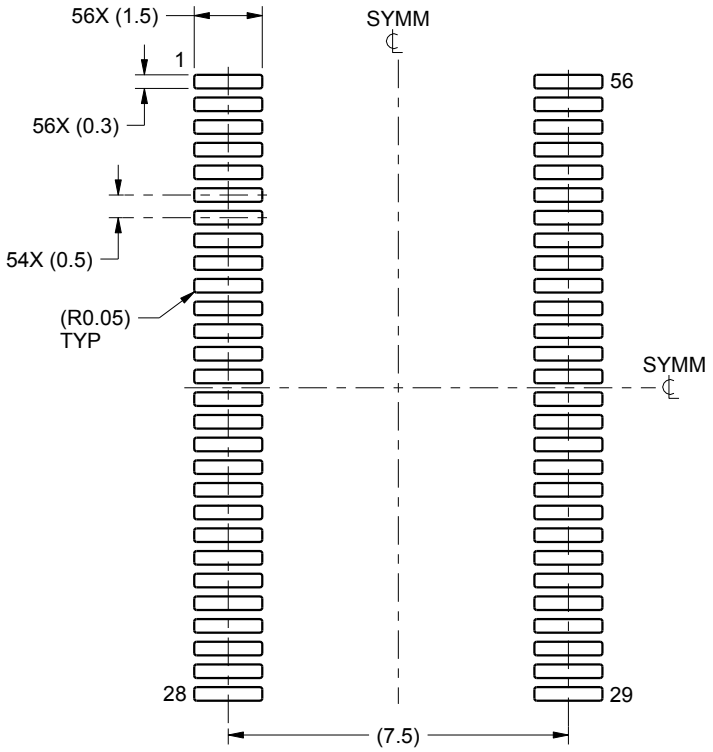

LAND PATTERN EXAMPLE
SCALE:6X

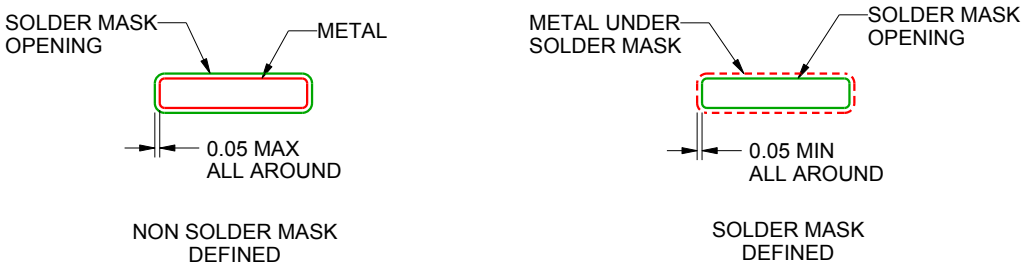

SOLDER MASK DETAILS

4222167/A 07/2015

NOTES: (continued)

5. Publication IPC-7351 may have alternate designs.
6. Solder mask tolerances between and around signal pads can vary based on board fabrication site.

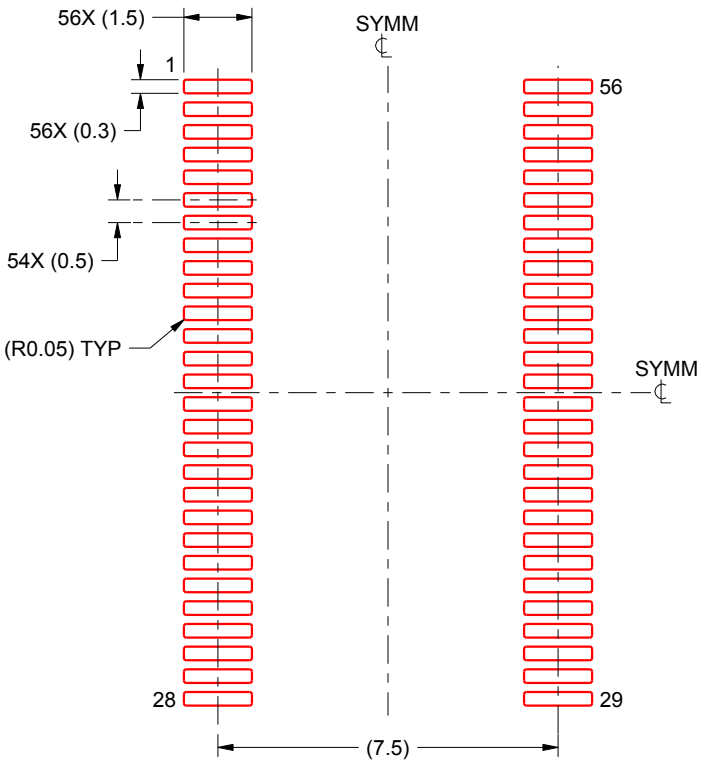

SOLDER PASTE EXAMPLE
BASED ON 0.125 mm THICK STENCIL
SCALE:6X

4222167/A 07/2015

NOTES: (continued)

7. Laser cutting apertures with trapezoidal walls and rounded corners may offer better paste release. IPC-7525 may have alternate design recommendations.
8. Board assembly site may have different recommendations for stencil design.

IMPORTANT NOTICE

Texas Instruments Incorporated and its subsidiaries (TI) reserve the right to make corrections, enhancements, improvements and other changes to its semiconductor products and services per JESD46, latest issue, and to discontinue any product or service per JESD48, latest issue. Buyers should obtain the latest relevant information before placing orders and should verify that such information is current and complete. All semiconductor products (also referred to herein as “components”) are sold subject to TI’s terms and conditions of sale supplied at the time of order acknowledgment.

TI warrants performance of its components to the specifications applicable at the time of sale, in accordance with the warranty in TI’s terms and conditions of sale of semiconductor products. Testing and other quality control techniques are used to the extent TI deems necessary to support this warranty. Except where mandated by applicable law, testing of all parameters of each component is not necessarily performed.

TI assumes no liability for applications assistance or the design of Buyers’ products. Buyers are responsible for their products and applications using TI components. To minimize the risks associated with Buyers’ products and applications, Buyers should provide adequate design and operating safeguards.

TI does not warrant or represent that any license, either express or implied, is granted under any patent right, copyright, mask work right, or other intellectual property right relating to any combination, machine, or process in which TI components or services are used. Information published by TI regarding third-party products or services does not constitute a license to use such products or services or a warranty or endorsement thereof. Use of such information may require a license from a third party under the patents or other intellectual property of the third party, or a license from TI under the patents or other intellectual property of TI.

Reproduction of significant portions of TI information in TI data books or data sheets is permissible only if reproduction is without alteration and is accompanied by all associated warranties, conditions, limitations, and notices. TI is not responsible or liable for such altered documentation. Information of third parties may be subject to additional restrictions.

Resale of TI components or services with statements different from or beyond the parameters stated by TI for that component or service voids all express and any implied warranties for the associated TI component or service and is an unfair and deceptive business practice. TI is not responsible or liable for any such statements.

Buyer acknowledges and agrees that it is solely responsible for compliance with all legal, regulatory and safety-related requirements concerning its products, and any use of TI components in its applications, notwithstanding any applications-related information or support that may be provided by TI. Buyer represents and agrees that it has all the necessary expertise to create and implement safeguards which anticipate dangerous consequences of failures, monitor failures and their consequences, lessen the likelihood of failures that might cause harm and take appropriate remedial actions. Buyer will fully indemnify TI and its representatives against any damages arising out of the use of any TI components in safety-critical applications.

In some cases, TI components may be promoted specifically to facilitate safety-related applications. With such components, TI’s goal is to help enable customers to design and create their own end-product solutions that meet applicable functional safety standards and requirements. Nonetheless, such components are subject to these terms.

No TI components are authorized for use in FDA Class III (or similar life-critical medical equipment) unless authorized officers of the parties have executed a special agreement specifically governing such use.

Only those TI components which TI has specifically designated as military grade or “enhanced plastic” are designed and intended for use in military/aerospace applications or environments. Buyer acknowledges and agrees that any military or aerospace use of TI components which have ***not*** been so designated is solely at the Buyer's risk, and that Buyer is solely responsible for compliance with all legal and regulatory requirements in connection with such use.

TI has specifically designated certain components as meeting ISO/TS16949 requirements, mainly for automotive use. In any case of use of non-designated products, TI will not be responsible for any failure to meet ISO/TS16949.

Products		**Applications**	
Audio	www.ti.com/audio	Automotive and Transportation	www.ti.com/automotive
Amplifiers	amplifier.ti.com	Communications and Telecom	www.ti.com/communications
Data Converters	dataconverter.ti.com	Computers and Peripherals	www.ti.com/computers
DLP® Products	www.dlp.com	Consumer Electronics	www.ti.com/consumer-apps
DSP	dsp.ti.com	Energy and Lighting	www.ti.com/energy
Clocks and Timers	www.ti.com/clocks	Industrial	www.ti.com/industrial
Interface	interface.ti.com	Medical	www.ti.com/medical
Logic	logic.ti.com	Security	www.ti.com/security
Power Mgmt	power.ti.com	Space, Avionics and Defense	www.ti.com/space-avionics-defense
Microcontrollers	microcontroller.ti.com	Video and Imaging	www.ti.com/video
RFID	www.ti-rfid.com		
OMAP Applications Processors	www.ti.com/omap	**TI E2E Community**	e2e.ti.com
Wireless Connectivity	www.ti.com/wirelessconnectivity		

Mailing Address: Texas Instruments, Post Office Box 655303, Dallas, Texas 75265
Copyright © 2016, Texas Instruments Incorporated