CY7C1041B

256K x 16 Static RAM

Features

- **High speed**
  - **— t_{AA} = 12 ns**
- **Low active power**
  - **— 1540 mW (max.)**
- **Low CMOS standby power (L version)**
  - **— 2.75 mW (max.)**
- **2.0V Data Retention (400 μW at 2.0V retention)**
- **Automatic power-down when deselected**
- **TTL-compatible inputs and outputs**
- **Easy memory expansion with $\overline{CE}$ and $\overline{OE}$ features**

Functional Description

The CY7C1041B is a high-performance CMOS static RAM organized as 262,144 words by 16 bits.

Writing to the device is accomplished by taking Chip Enable ($\overline{CE}$) and Write Enable ($\overline{WE}$) inputs LOW. If Byte Low Enable ($\overline{BLE}$) is LOW, then data from I/O pins (I/O_0 through I/O_7), is written into the location specified on the address pins (A_0 through A_{17}). If Byte High Enable ($\overline{BHE}$) is LOW, then data from I/O pins (I/O_8 through I/O_{15}) is written into the location specified on the address pins (A_0 through A_{17}).

Reading from the device is accomplished by taking Chip Enable ($\overline{CE}$) and Output Enable ($\overline{OE}$) LOW while forcing the Write Enable ($\overline{WE}$) HIGH. If Byte Low Enable ($\overline{BLE}$) is LOW, then data from the memory location specified by the address pins will appear on I/O_0 to I/O_7. If Byte High Enable ($\overline{BHE}$) is LOW, then data from memory will appear on I/O_8 to I/O_{15}. See the truth table at the back of this data sheet for a complete description of read and write modes.

The input/output pins (I/O_0 through I/O_{15}) are placed in a high-impedance state when the device is deselected ($\overline{CE}$ HIGH), the outputs are disabled ($\overline{OE}$ HIGH), the $\overline{BHE}$ and $\overline{BLE}$ are disabled ($\overline{BHE}$, $\overline{BLE}$ HIGH), or during a write operation ($\overline{CE}$ LOW, and $\overline{WE}$ LOW).

The CY7C1041B is available in a standard 44-pin 400-mil-wide body width SOJ and 44-pin TSOP II package with center power and ground (revolutionary) pinout.

Logic Block Diagram

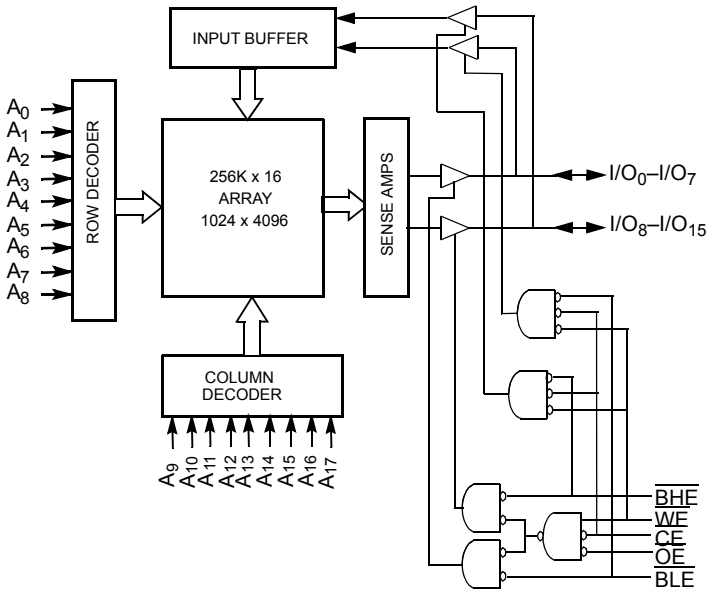

Pin Configuration

SOJ
TSOP II
Top View

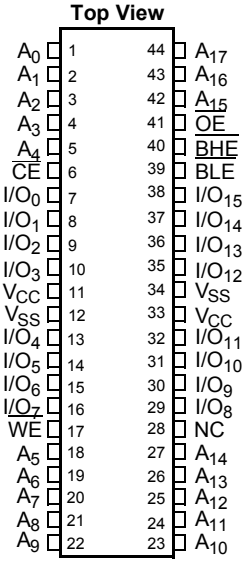

[+] Feedback

Selection Guide

			7C1041B-12	7C1041B-15	7C1041B-17	7C1041B-20	7C1041B-25	Unit
Maximum Access Time			12	15	17	20	25	ns
Maximum Operating Current	Com'l		200	190	180	170	160	mA
	Ind'l		220	210	200	190	180	
Maximum CMOS Standby Current	Com'l		3	3	3	3	3	mA
	Com'l	L	-	0.5	0.5	0.5	0.5	
	Ind'l		-	6	6	6	6	

Maximum Ratings

(Above which the useful life may be impaired. For user guidelines, not tested.)

Storage Temperature .....–65°C to +150°C

Ambient Temperature with Power Applied.....–55°C to +125°C

Supply Voltage on V_{CC} to Relative GND[1] .... –0.5V to +7.0V

DC Voltage Applied to Outputs in High Z State[1] .....–0.5V to V_{CC} + 0.5V

DC Input Voltage[1] .....–0.5V to V_{CC} + 0.5V

Current into Outputs (LOW)..... 20 mA

Operating Range

Range	Ambient Temperature[2]	V_{CC}
Commercial	0°C to +70°C	5V ± 0.5
Industrial	–40°C to +85°C	

Electrical Characteristics Over the Operating Range

Parameter	Description	Test Conditions		7C1041B-12 Min.	7C1041B-12 Max.	7C1041B-15 Min.	7C1041B-15 Max.	7C1041B-17 Min.	7C1041B-17 Max.	Unit
V_{OH}	Output HIGH Voltage	V_{CC} = Min., I_{OH} = –4.0 mA		2.4		2.4		2.4		V
V_{OL}	Output LOW Voltage	V_{CC} = Min., I_{OL} = 8.0 mA			0.4		0.4		0.4	V
V_{IH}	Input HIGH Voltage			2.2	V_{CC} + 0.5	2.2	V_{CC} + 0.5	2.2	V_{CC} + 0.5	V
V_{IL}	Input LOW Voltage[1]			–0.5	0.8	–0.5	0.8	–0.5	0.8	V
I_{IX}	Input Load Current	GND ≤ V_I ≤ V_{CC}		–1	+1	–1	+1	–1	+1	mA
I_{OZ}	Output Leakage Current	GND ≤ V_{OUT} ≤ V_{CC}, Output Disabled		–1	+1	–1	+1	–1	+1	mA
I_{CC}	V_{CC} Operating Supply Current	V_{CC} = Max., f = f_{MAX} = $1/t_{RC}$	Com'l		200		190		180	mA
			Ind'l		220		210		200	mA
I_{SB1}	Automatic CE Power-Down Current —TTL Inputs	Max. V_{CC}, $\overline{CE}$ ≥ V_{IH} V_{IN} ≥ V_{IH} or V_{IN} ≤ V_{IL}, f = f_{MAX}			40		40		40	mA
I_{SB2}	Automatic CE Power-Down Current —CMOS Inputs	Max. V_{CC}, $\overline{CE}$ ≥ V_{CC} – 0.3V, V_{IN} ≥ V_{CC} – 0.3V, or V_{IN} ≤ 0.3V, f = 0	Com'l		3		3		3	mA
			Com'l L		-		0.5		0.5	mA
			Ind'l		-		6		6	mA

Notes:
1. V_{IL} (min.) = –2.0V for pulse durations of less than 20 ns.
2. T_A is the case temperature.

[+] Feedback

Electrical Characteristics Over the Operating Range (continued)

Parameter	Description	Test Conditions		7C1041B-20		7C1041B-25		Unit
				Min.	Max.	Min.	Max.	
V_{OH}	Output HIGH Voltage	V_{CC} = Min., I_{OH} = –4.0 mA		2.4		2.4		V
V_{OL}	Output LOW Voltage	V_{CC} = Min., I_{OL} = 8.0 mA			0.4		0.4	V
V_{IH}	Input HIGH Voltage			2.2	V_{CC} + 0.5	2.2	V_{CC} + 0.5	V
V_{IL}	Input LOW Voltage[1]			–0.5	0.8	–0.5	0.8	V
I_{IX}	Input Load Current	GND ≤ V_I ≤ V_{CC}		–1	+1	–1	+1	mA
I_{OZ}	Output Leakage Current	GND ≤ V_{OUT} ≤ V_{CC}, Output Disabled		–1	+1	–1	+1	mA
I_{CC}	V_{CC} Operating Supply Current	V_{CC} = Max., f = f_{MAX} = $1/t_{RC}$	Com'l		170		160	mA
			Ind'l		190		180	mA
I_{SB1}	Automatic CE Power-Down Current —TTL Inputs	Max. V_{CC}, $\overline{CE}$ ≥ V_{IH} V_{IN} ≥ V_{IH} or V_{IN} ≤ V_{IL}, f = f_{MAX}			40		40	mA
I_{SB2}	Automatic CE Power-Down Current —CMOS Inputs	Max. V_{CC}, $\overline{CE}$ ≥ V_{CC} – 0.3V, V_{IN} ≥ V_{CC} – 0.3V, or V_{IN} ≤ 0.3V, f = 0	Com'l		3		3	mA
			Com'l L		0.5		0.5	mA
			Ind'l		6		6	mA

Capacitance[3]

Parameter	Description	Test Conditions	Max.	Unit
C_{IN}	Input Capacitance	T_A = 25°C, f = 1 MHz, V_{CC} = 5.0V	8	pF
C_{OUT}	I/O Capacitance		8	pF

AC Test Loads and Waveforms

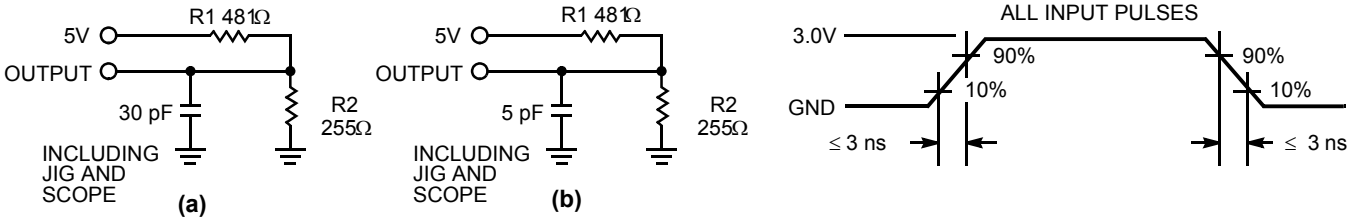

Equivalent to: THÉVENIN EQUIVALENT

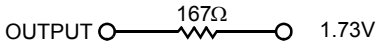

Note:
3. Tested initially and after any design or process changes that may affect these parameters.

[+] Feedback

Switching Characteristics[4] Over the Operating Range

Parameter	Description	7C1041B-12		7C1041B-15		7C1041B-17		Unit
		Min.	Max.	Min.	Max.	Min.	Max.	
Read Cycle								
t_{power}	V_{CC}(typical) to the First Access[5]	1		1		1		µs
t_{RC}	Read Cycle Time	12		15		17		ns
t_{AA}	Address to Data Valid		12		15		17	ns
t_{OHA}	Data Hold from Address Change	3		3		3		ns
t_{ACE}	$\overline{CE}$ LOW to Data Valid		12		15		17	ns
t_{DOE}	$\overline{OE}$ LOW to Data Valid		6		7		7	ns
t_{LZOE}	$\overline{OE}$ LOW to Low Z	0		0		0		ns
t_{HZOE}	$\overline{OE}$ HIGH to High Z[6, 7]		6		7		7	ns
t_{LZCE}	$\overline{CE}$ LOW to Low Z[7]	3		3		3		ns
t_{HZCE}	$\overline{CE}$ HIGH to High Z[6, 7]		6		7		7	ns
t_{PU}	$\overline{CE}$ LOW to Power-Up	0		0		0		ns
t_{PD}	$\overline{CE}$ HIGH to Power-Down		12		15		17	ns
t_{DBE}	Byte Enable to Data Valid		6		7		7	ns
t_{LZBE}	Byte Enable to Low Z	0		0		0		ns
t_{HZBE}	Byte Disable to High Z		6		7		7	ns
Write Cycle[8, 9]								
t_{WC}	Write Cycle Time	12		15		17		ns
t_{SCE}	$\overline{CE}$ LOW to Write End	10		12		14		ns
t_{AW}	Address Set-Up to Write End	10		12		14		ns
t_{HA}	Address Hold from Write End	0		0		0		ns
t_{SA}	Address Set-Up to Write Start	0		0		0		ns
t_{PWE}	$\overline{WE}$ Pulse Width	10		12		14		ns
t_{SD}	Data Set-Up to Write End	7		8		8		ns
t_{HD}	Data Hold from Write End	0		0		0		ns
t_{LZWE}	$\overline{WE}$ HIGH to Low Z[7]	3		3		3		ns
t_{HZWE}	$\overline{WE}$ LOW to High Z[6, 7]		6		7		7	ns
t_{BW}	Byte Enable to End of Write	10		12		12		ns

Notes:

4. Test conditions assume signal transition time of 3 ns or less, timing reference levels of 1.5V, input pulse levels of 0 to 3.0V, and output loading of the specified I_{OL}/I_{OH} and 30-pF load capacitance.
5. This part has a voltage regulator which steps down the voltage from 5V to 3.3V internally. t_{power} time has to be provided initially before a read/write operation is started.
6. t_{HZOE}, t_{HZCE}, and t_{HZWE} are specified with a load capacitance of 5 pF as in part (b) of AC Test Loads. Transition is measured ±500 mV from steady-state voltage.
7. At any given temperature and voltage condition, t_{HZCE} is less than t_{LZCE}, t_{HZOE} is less than t_{LZOE}, and t_{HZWE} is less than t_{LZWE} for any given device.
8. The internal write time of the memory is defined by the overlap of $\overline{CE}$ LOW, and $\overline{WE}$ LOW. $\overline{CE}$ and $\overline{WE}$ must be LOW to initiate a write, and the transition of either of these signals can terminate the write. The input data set-up and hold timing should be referenced to the leading edge of the signal that terminates the write.
9. The minimum write cycle time for Write Cycle no. 3 ($\overline{WE}$ controlled, $\overline{OE}$ LOW) is the sum of t_{HZWE} and t_{SD}.

[+] Feedback

Switching Characteristics[4] Over the Operating Range (continued)

Parameter	Description	7C1041B-20		7C1041B-25		Unit
		Min.	Max.	Min.	Max.	
Read Cycle						
t_{power}	V_{CC}(typical) to the First Access[5]	1		1		µs
t_{RC}	Read Cycle Time	20		25		ns
t_{AA}	Address to Data Valid		20		25	ns
t_{OHA}	Data Hold from Address Change	3		5		ns
t_{ACE}	$\overline{CE}$ LOW to Data Valid		20		25	ns
t_{DOE}	$\overline{OE}$ LOW to Data Valid		8		10	ns
t_{LZOE}	$\overline{OE}$ LOW to Low Z	0		0		ns
t_{HZOE}	$\overline{OE}$ HIGH to High Z[6, 7]		8		10	ns
t_{LZCE}	$\overline{CE}$ LOW to Low Z[7]	3		5		ns
t_{HZCE}	$\overline{CE}$ HIGH to High Z[6, 7]		8		10	ns
t_{PU}	$\overline{CE}$ LOW to Power-Up	0		0		ns
t_{PD}	$\overline{CE}$ HIGH to Power-Down		20		25	ns
t_{DBE}	Byte Enable to Data Valid		8		10	ns
t_{LZBE}	Byte Enable to Low Z	0		0		ns
t_{HZBE}	Byte Disable to High Z		8		10	ns
WRITE CYCLE[8, 9]						
t_{WC}	Write Cycle Time	20		25		ns
t_{SCE}	$\overline{CE}$ LOW to Write End	13		15		ns
t_{AW}	Address Set-Up to Write End	13		15		ns
t_{HA}	Address Hold from Write End	0		0		ns
t_{SA}	Address Set-Up to Write Start	0		0		ns
t_{PWE}	$\overline{WE}$ Pulse Width	13		15		ns
t_{SD}	Data Set-Up to Write End	9		10		ns
t_{HD}	Data Hold from Write End	0		0		ns
t_{LZWE}	$\overline{WE}$ HIGH to Low Z[7]	3		5		ns
t_{HZWE}	$\overline{WE}$ LOW to High Z[6, 7]		8		10	ns
t_{BW}	Byte Enable to End of Write	13		15		ns

Data Retention Characteristics Over the Operating Range **(L version only)**

Parameter	Description			Conditions[11]	Min.	Max.	Unit
V_{DR}	V_{CC} for Data Retention				2.0		V
I_{CCDR}	Data Retention Current	Com'l	L	$V_{CC} = V_{DR} = 3.0V$, $\overline{CE} \geq V_{CC} - 0.3V$, $V_{IN} \geq V_{CC} - 0.3V$ or $V_{IN} \leq 0.3V$		200	mA
t_{CDR}[3]	Chip Deselect to Data Retention Time				0		ns
t_R[10]	Operation Recovery Time				t_{RC}		ns

Notes:
10. $t_r \leq 3$ ns for the -12 and -15 speeds. $t_r \leq 5$ ns for the -20 and slower speeds.
11. No input may exceed V_{CC} + 0.5V.

[+] Feedback

Data Retention Waveform

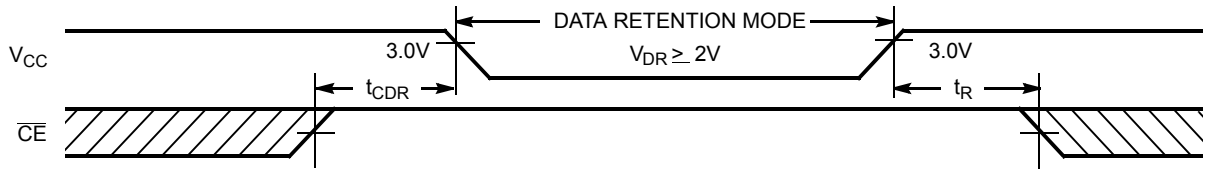

Switching Waveforms

Read Cycle No. 1[12, 13]

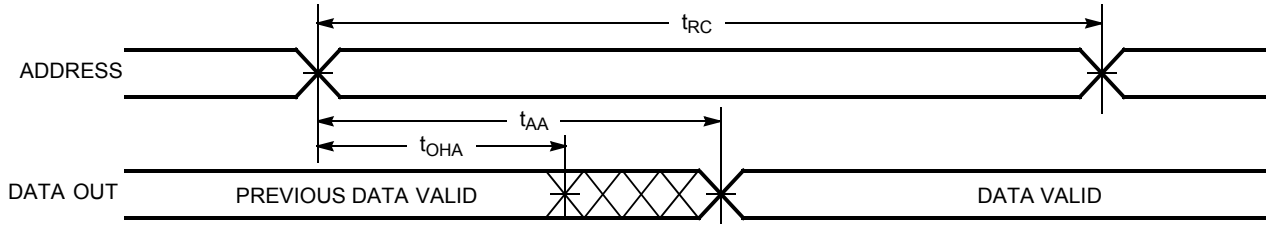

Read Cycle No. 2 ($\overline{OE}$ Controlled)[13, 14]

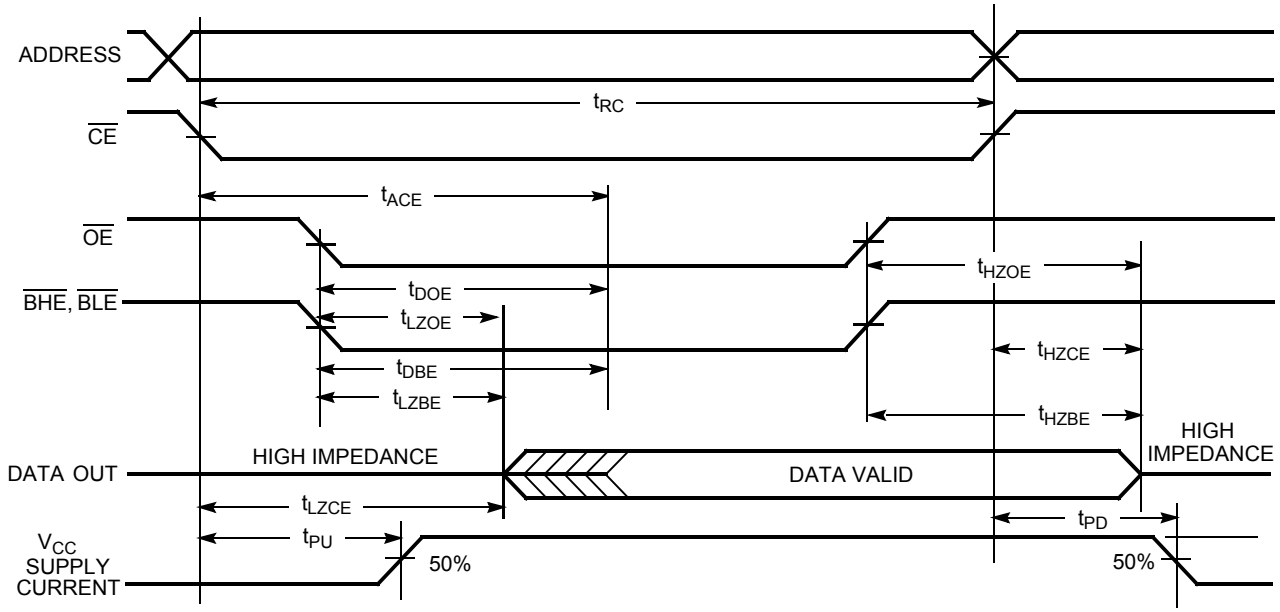

Notes:
12. Device is continuously selected. $\overline{OE}$, $\overline{CE}$, $\overline{BHE}$, and/or $\overline{BHE} = V_{IL}$.
13. $\overline{WE}$ is HIGH for read cycle.
14. Address valid prior to or coincident with $\overline{CE}$ transition LOW.

[+] Feedback

Switching Waveforms (continued)

Write Cycle No. 1 ($\overline{CE}$ Controlled)[15, 16]

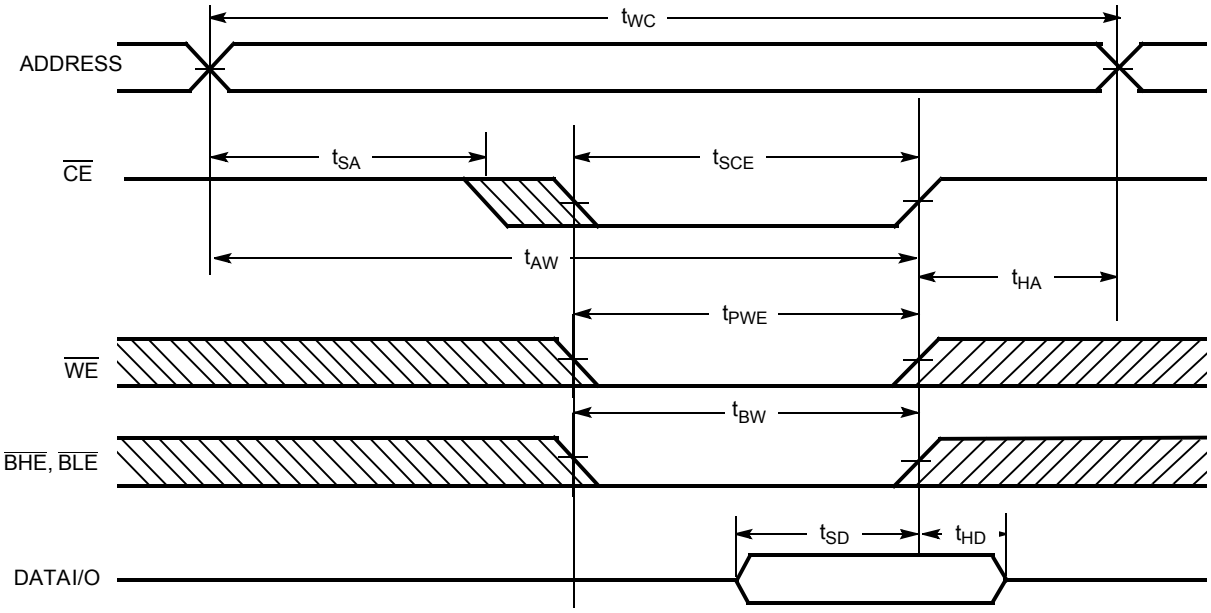

Write Cycle No. 2 ($\overline{BLE}$ or $\overline{BHE}$ Controlled)

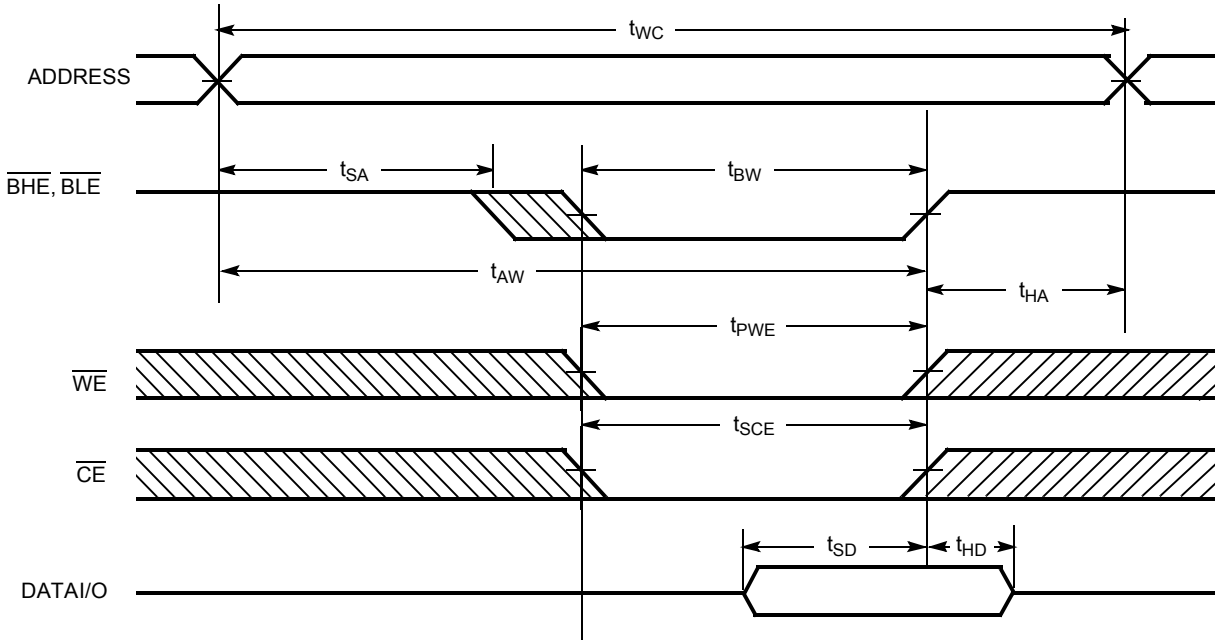

Notes:
15. Data I/O is high impedance if $\overline{OE}$ or $\overline{BHE}$ and/or $\overline{BLE}$= V_{IH}.
16. If $\overline{CE}$ goes HIGH simultaneously with $\overline{WE}$ going HIGH, the output remains in a high-impedance state.

[+] Feedback

Switching Waveforms (continued)

Write Cycle No. 3 ($\overline{WE}$ Controlled, $\overline{OE}$ LOW)

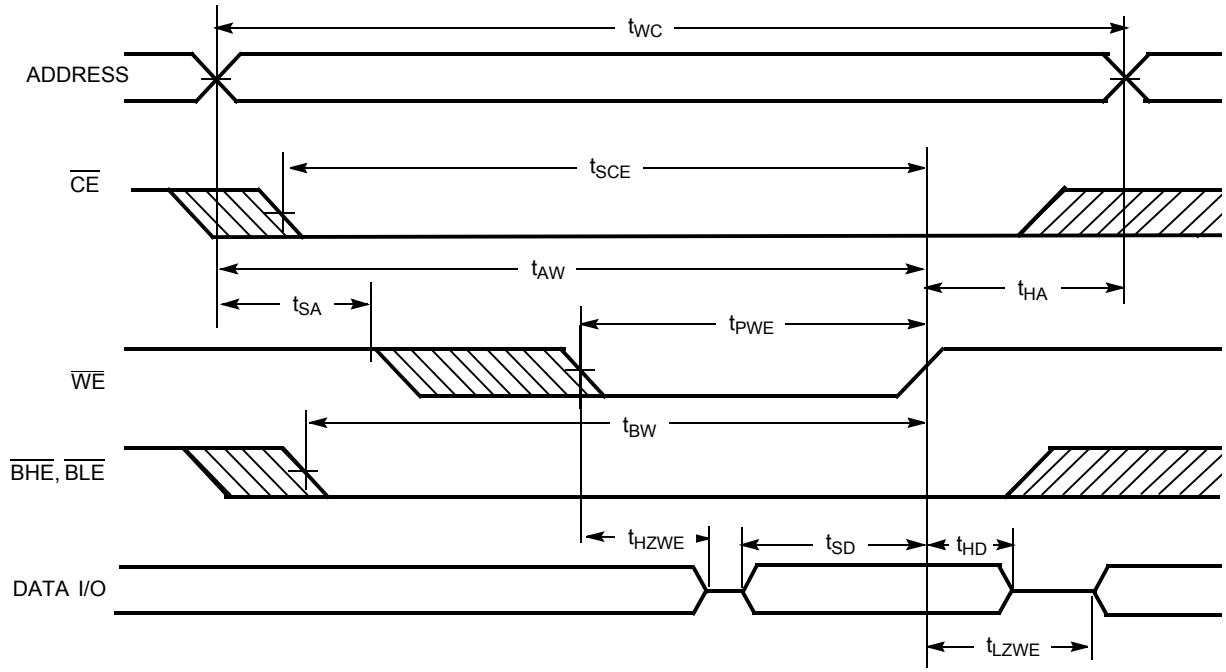

Truth Table

$\overline{CE}$	$\overline{OE}$	$\overline{WE}$	$\overline{BLE}$	$\overline{BHE}$	I/O_0–I/O_7	I/O_8–I/O_{15}	Mode	Power
H	X	X	X	X	High Z	High Z	Power Down	Standby (I_{SB})
L	L	H	L	L	Data Out	Data Out	Read All bits	Active (I_{CC})
L	L	H	L	H	Data Out	High Z	Read Lower bits only	Active (I_{CC})
L	L	H	H	L	High Z	Data Out	Read Upper bits only	Active (I_{CC})
L	X	L	L	L	Data In	Data In	Write All bits	Active (I_{CC})
L	X	L	L	H	Data In	High Z	Write Lower bits only	Active (I_{CC})
L	X	L	H	L	High Z	Data In	Write Upper bits only	Active (I_{CC})
L	H	H	X	X	High Z	High Z	Selected, Outputs Disabled	Active (I_{CC})

[+] Feedback

Ordering Information

Speed (ns)	Ordering Code	Package Name	Package Type	Operating Range
12	CY7C1041B-12VC	V34	44-Lead (400-Mil) Molded SOJ	Commercial
	CY7C1041B-12VXC	V34	44-Lead (400-Mil) Molded SOJ (Pb-free)	
	CY7C1041B-12ZC	Z44	44-Lead TSOP Type II	
	CY7C1041B-12ZXC	Z44	44-Lead TSOP Type II (Pb-free)	
15	CY7C1041B-15VC	V34	44-Lead (400-Mil) Molded SOJ	
	CY7C1041B-15VXC	V34	44-Lead (400-Mil) Molded SOJ (Pb-free)	
	CY7C1041BL-15VC	V34	44-Lead (400-Mil) Molded SOJ	
	CY7C1041B-15ZC	Z44	44-Lead TSOP Type II	
	CY7C1041B-15ZXC	Z44	44-Lead TSOP Type II (Pb-free)	
	CY7C1041BL-15ZC	Z44	44-Lead TSOP Type II	
	CY7C1041BL-15ZXC	Z44	44-Lead TSOP Type II (Pb-free)	
17	CY7C1041B-17VC	V34	44-Lead (400-Mil) Molded SOJ	
	CY7C1041BL-17VC	V34	44-Lead (400-Mil) Molded SOJ	
	CY7C1041B-17ZC	Z44	44-Lead TSOP Type II	
	CY7C1041BL-17ZC	Z44	44-Lead TSOP Type II	
20	CY7C1041B-20VC	V34	44-Lead (400-Mil) Molded SOJ	
	CY7C1041B-20VXC	V34	44-Lead (400-Mil) Molded SOJ (Pb-free)	
	CY7C1041BL-20VC	V34	44-Lead (400-Mil) Molded SOJ	
	CY7C1041BL-20VXC	V34	44-Lead (400-Mil) Molded SOJ (Pb-free)	
	CY7C1041B-20ZC	Z44	44-Lead TSOP Type II	
	CY7C1041B-20ZXC	Z44	44-Lead TSOP Type II (Pb-free)	
	CY7C1041BL-20ZC	Z44	44-Lead TSOP Type II	
25	CY7C1041B-25VC	V34	44-Lead (400-Mil) Molded SOJ	
	CY7C1041BL-25VC	V34	44-Lead (400-Mil) Molded SOJ	
	CY7C1041B-25ZC	Z44	44-Lead TSOP Type II	
	CY7C1041BL-25ZC	Z44	44-Lead TSOP Type II	
15	CY7C1041B-15ZI	Z44	44-Lead TSOP Type II	Industrial
	CY7C1041B-15ZXI	Z44	44-Lead TSOP Type II (Pb-free)	
	CY7C1041B-15VI	V34	44-Lead (400-Mil) Molded SOJ	
	CY7C1041B-15VXI	V34	44-Lead (400-Mil) Molded SOJ (Pb-free)	
17	CY7C1041B-17ZI	V34	44-Lead TSOP Type II	
	CY7C1041B-17VI	Z44	44-Lead (400-Mil) Molded SOJ	
20	CY7C1041B-20ZI	Z44	44-Lead TSOP Type II	
	CY7C1041B-20ZXI	Z44	44-Lead TSOP Type II (Pb-free)	
	CY7C1041B-20VI	Z44	44-Lead (400-Mil) Molded SOJ	
	CY7C1041B-20VXI	Z44	44-Lead (400-Mil) Molded SOJ (Pb-free)	
25	CY7C1041B-25ZI	Z44	44-Lead TSOP Type II	
	CY7C1041B-25VI	Z44	44-Lead (400-Mil) Molded SOJ	

[+] Feedback

Package Diagrams

44-Lead (400-Mil) Molded SOJ V34

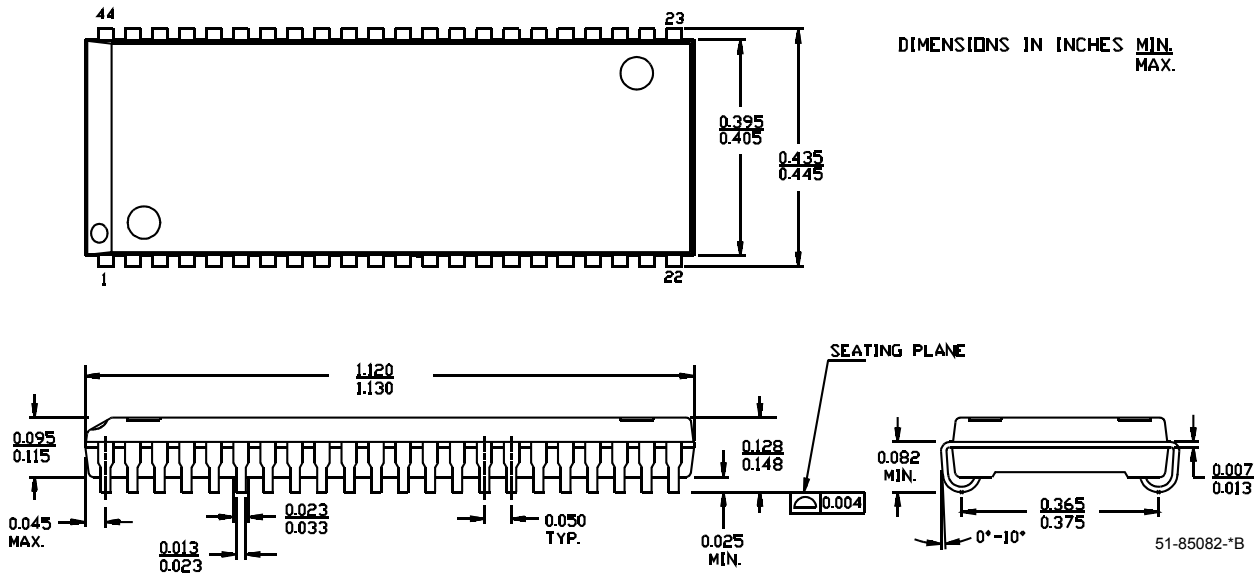

44-Pin TSOP II Z44

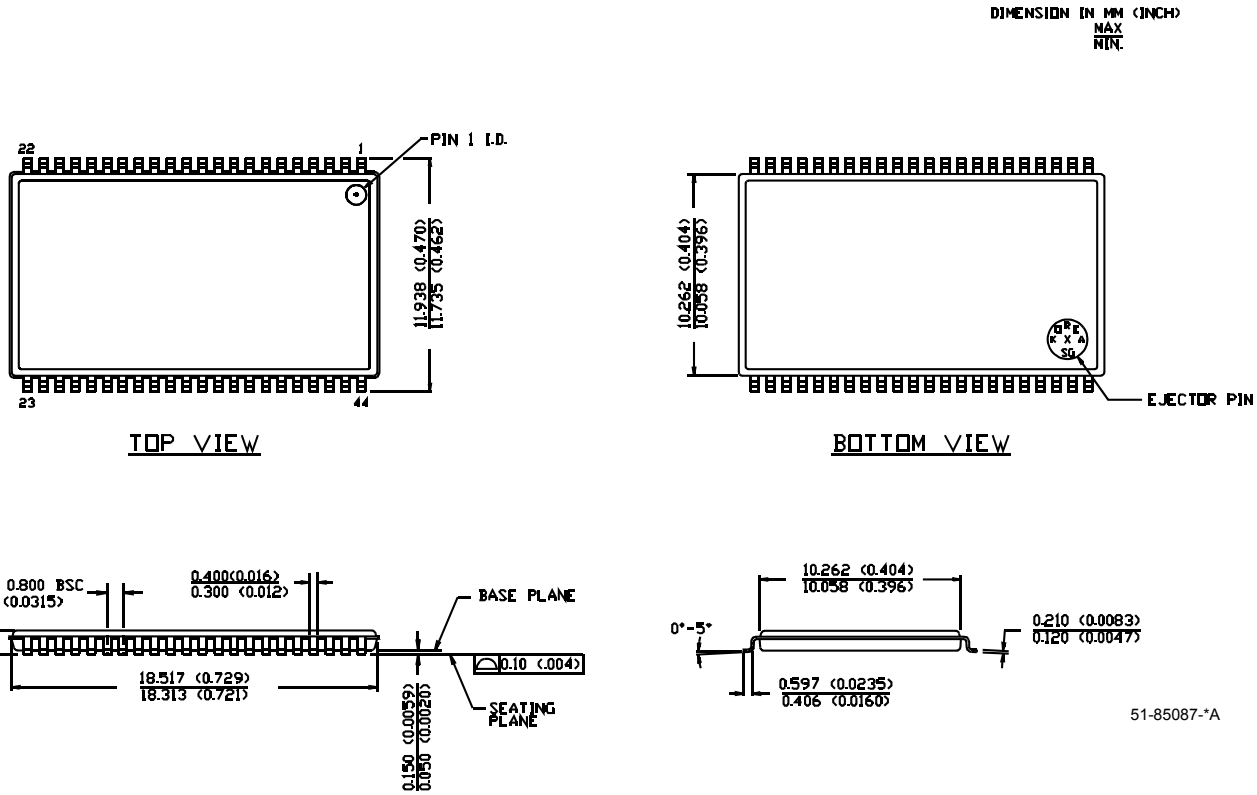

All products and company names mentioned in this document may be the trademarks of their respective holders.

© Cypress Semiconductor Corporation, 2005. The information contained herein is subject to change without notice. Cypress Semiconductor Corporation assumes no responsibility for the use of any circuitry other than circuitry embodied in a Cypress product. Nor does it convey or imply any license under patent or other rights. Cypress products are not warranted nor intended to be used for medical, life support, life saving, critical control or safety applications, unless pursuant to an express written agreement with Cypress. Furthermore, Cypress does not authorize its products for use as critical components in life-support systems where a malfunction or failure may reasonably be expected to result in significant injury to the user. The inclusion of Cypress products in life-support systems application implies that the manufacturer assumes all risk of such use and in doing so indemnifies Cypress against all charges.

[+] Feedback

Document History Page

Document Title: CY7C1041B 256K x 16 Static RAM Document Number: 38-05142				
REV.	**ECN NO.**	**Issue Date**	**Orig. of Change**	**Description of Change**
**	109886	09/15/01	SZV	Change from Spec number: 38-00938 to 38-05142
*A	341401	See ECN	AJU	Added Pb-free ordering information

[+] Feedback