ConnectCore® 7U

Universal ARM7 Core Module

Embedded ARM core processor module offers a wide range of connectivity options and integrated networking support in a compact DIP form factor.



Overview

The ConnectCore 7U core processor module utilizes Digi's high-performance NS7520 NET+ARM microprocessor, providing the ideal core processor platform for product designs demanding an additional level of performance, connectivity and flexibility. Combining core processing capabilities with long-term product availability, it is suited for applications including transportation, security/access control, building and industrial automation, retail, warehousing and others.

The module offers 16 MB of SDRAM and up to 8 MB of on-board Flash memory, an integrated 10/100 Mbit Ethernet MAC/PHY, up to two configurable UART/SPI ports, an I2C bus interface option, 16 shared GPIO ports for application-specific use, and an external 10-bit address/8-bit data bus interface for component integration flexibility.

The Digi JumpStart Kit® for NET+OS® delivers a ThreadX-based, IPv6-ready, royalty-free turnkey solution with all of the integrated building blocks needed for secure network-enabled embedded software development.

Platforms and Services



Supported Software Platform



Support


Design Services

Block Diagram

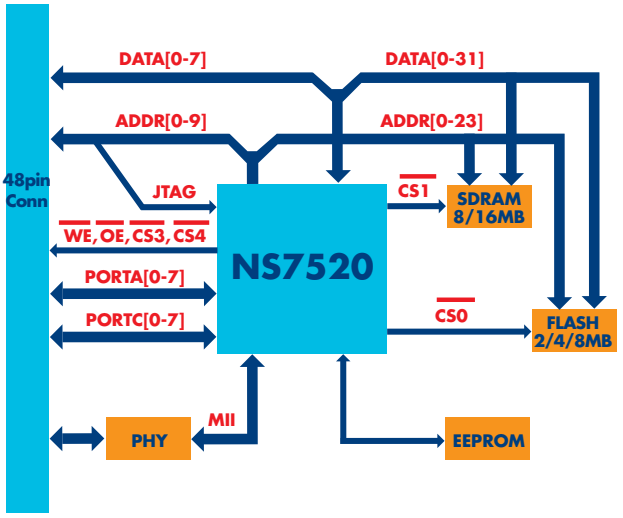

Features/Benefits

- Compact and versatile 48-pin DIP form factor
- Powerful 32-bit Digi NS7520 (ARM7) processor
- Integrated on-chip 10/100 Ethernet networking
- Peripheral interface flexibility
- Digi processor technology for true long-term product availability
- Complete IPv6-ready NET+OS development platform
- Seamless migration path to fully integrated Digi NET+ARM system-on-chip solution

Digi JumpStart Kit® Overview

Digi JumpStart Kit® for NET+OS®



This royalty-free turnkey solution for embedded software development is based on the ThreadX Real-Time Operating System (RTOS), one of the most reliable and field-proven RTOS solutions available. In addition to ThreadX, NET+OS provides the integrated building blocks needed to create product solutions with leading network security using Digi embedded modules and microprocessors.

For professional NET+OS software development, the Eclipse based Digi ESP™ Integrated Development Environment (IDE) with graphical user interface and high-speed USB 2.0 hardware debugger is provided out-of-the-box.

- Royalty-free turn-key solution for embedded development
- Built on field-proven and compact ThreadX RTOS
- Fully integrated support for secure, IPv4/IPv6 networking applications
- Professional software development using Windows-based Digi ESP IDE

Please refer to the feature specs on our website for detailed information about the specific software platform capabilities.

Digi JumpStart Kit® Contents

Software Platform	NET+OS®
Module	ConnectCore 7U w/ 8 MB Flash, 16 MB SDRAM, Ethernet MAC/PHY
Development Board	2 serial ports (RS-232, TTL), 2 user push-buttons, 2 user LEDs, Prototyping area, User/Application header, Status LEDs, Character display connector, Reset button, JTAG connector, 5VDC power supply
CD/DVD	Digi NET+OS CD: NET+OS 7.x, Digi ESP IDE, BSP Source code, Sample code, Support, Documentation
Documentation	Quick start guide, Digi ESP tutorial, NET+OS porting guide, NET+OS API documentation, Advanced Web Server, Hardware reference manual, Development board schematics
Power Supplies and Accessories	External wall power supply (110/240VAC) with interchangeable outlet adapters (North America, EU, UK and Australia), JTAG adapter, Ethernet cable, Serial cable
Other	Digi JTAG Link USB 2.0 hardware debugger
Part Numbers (worldwide)	CC-7U-NET

ConnectCore™ 7U

Hardware

Processor Type	32-bit NS7520 processor
ARM Core	ARM7TDMI
Processor Speed	55 MHz
Memory Base Population	2/8 MB NOR flash
	16 MB SDRAM
Serial EEPROM	8 KB
UART	Up to 230 Kbps
GPIO	Up to 16 shared GPIO ports
SPI	Master mode
I^2C	Standard mode (100 kHz)
External Memory Bus	10-bit address / 8-bit data; 2 external chip selects

ConnectCore™ 7U

Hardware (continued)

Timers/PWM	2 independent 27-bit timers; IRQ/FIQ, 2 microseconds to 20 hours
JTAG	•
Form Factor	48-Pin Dual In-Line Package (DIP)
Dimensions (L x W x H)	2.475 in (62.87 mm) x 0.728 in (18.50 mm)

Network Interface

Standard	IEEE 802.3
Physical Layer	10/100Base-T
Data Rate	10/100 Mbps (auto-sensing)
Mode	Full or Half duplex (auto-sensing)
Integrated MAC/PHY	•

Environmental

Operating Temperature	0° C to +70° C (+32° F to +158° F)
Storage Temperature	-50° C to +125° C (-58° F to +257° F)
Relative Humidity	5% to 90% (non-condensing)
Altitude	12,000 feet (3,658 meters)

Power Requirements (3.3V)

Maximum	280 mA

Regulatory Approvals

EN55022:2005, Class B	•
IEC/CISPR 24:1997, modified + A1:2001+ A2:2002	•

Bottom View

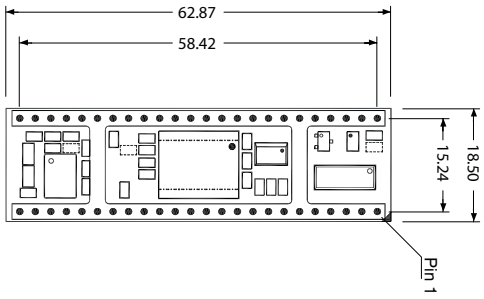

Side View

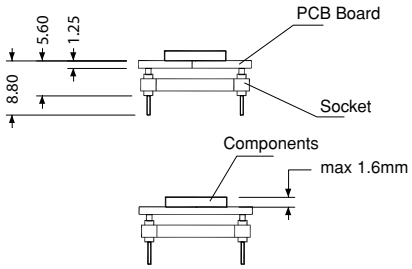

Visit www.digiembedded.com for part numbers.

THREADX®

DIGI SERVICE AND SUPPORT - You can purchase with confidence knowing that Digi is here to support you with expert technical support and a strong five-year warranty. www.digi.com/support

91001350
C1/509

Digi International
877-912-3444
952-912-3444
info@digi.com

Digi International France
+33-1-55-61-98-98
www.digi.fr

Digi International KK
+81-3-5428-0261
www.digi-intl.co.jp

Digi International (HK) Limited
+852-2833-1008
www.digi.cn

BUY ONLINE • www.digiembedded.com

© 2005-2009 Digi International Inc.
All rights reserved. Digi, Digi International, the Digi logo, ConnectCore, Digi JumpStart Kit, NET+ and NET+OS are trademarks or registered trademarks of Digi International Inc. in the United States and other countries worldwide. ARM and NET+ARM are trademarks or registered trademarks of ARM Limited. All other trademarks are the property of their respective owners.

Digi®