DPB52

True RMS 3-Phase voltage monitoring relay



Benefits

- **Wide voltages range**. Working in systems from 208 to 480 VAC.
- **Adjustable voltage levels and time delay**. To allow a correct response to real alarm conditions.
- **Output and status LED indication**. For quick troubleshooting.
- **Ultra-high harmonic immunity**. For very noisy environments.
- **High Compactness**. 17.5 mm DIN rail housing.

Description

DPB52 is a multifunction 3-phase mains monitoring relay.

It operates on 3P systems, monitoring phase loss and phase sequence, overvoltage and undervoltage.

Power supply provided by the monitored mains.

Delay on alarm, up to 30 s, for over/under voltage alarms.

For mounting on DIN-rail.

Main features

- Monitoring 3-phase mains with 3 wires (3P).
- Detection of the correct phase sequence and phase loss.
- Front dial adjustable overvoltage and undervoltage setpoints.
- Time delay.
- Changeover relay output.

Order code

Mounting	Frequency	Power supply	Component name/part number
DIN-rail	50 - 60 Hz	208 to 480 VAC	**DPB52CM44**

Structure

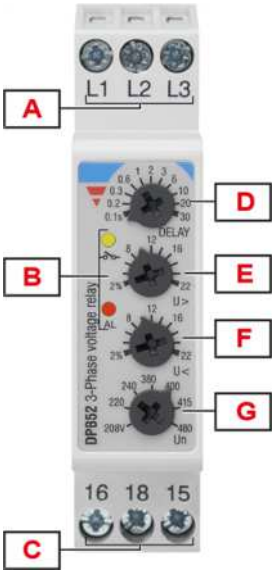

Element	Component	Function
A	Input terminals	Connection of the line voltages
B	Information LEDs	Yellow for relay output status Green / Red for signal alarm status
C	Output terminals	SPDT relay output
D	Delay time dial	Setting the alarm ON delay time
E	Overvoltage dial (U>)	Overvoltage setpoint adjustment
F	Undervoltage dial (U<)	Undervoltage setpoint adjustment
G	Mains nominal voltage dial (Un)	Mains nominal voltage adjustment

Features

Power supply

Power supply	Supplied by measured phases (L2, L3)
Overvoltage category	III (IEC 60038)
Voltage range	208 -40% to 480 V_{L-L} AC +30% (125 to 624 V)
Frequency range	50 to 60 Hz ± 10% sinusoidal waveform
Consumption	< 2.5 VA

Inputs

Terminals	L1, L2, L3
Measured variables	Phase sequence Phase loss Out of range 3P: voltages V_{L12}, V_{L23}, V_{L31}
Nominal line range	208 -35% to 480 VAC +25% (135 to 600 VAC)
Nominal voltages	208 V, 220 V, 240 V, 380 V, 400 V, 415 V, 480 V

Outputs

Terminals	15, 16, 18
Number of outputs	1
Type	SPDT electromechanical relay with changeover contacts
Logic	Output de-energised on alarm
Contact rating	**Ith:** 5 A @ 250 VAC **AC15:** 2.5 A @ 250 VAC **DC12:** 5 A @ 24 VDC **DC13:** 2.5 A @ 24 VDC
Electrical lifetime	≥ 50 x 10^3 operations (at 5 A, 250 V, cos φ= 1)
Mechanical lifetime	> 30 x 10^6 operations
Assignment	Associated to all alarm types

Insulation

Terminals	Basic
Inputs: L1, L2, L3 to output: 15, 16, 18	2.5 kVrms, 4 kV impulse 1.2/50 µs

General

Material	Polyamide (Nylon) (PA66/6) or Phenylene ether + Polystyrene (PPE-PS)
	Flammability rating: HB according to UL 94
Colour	RAL7035 (light grey)
Dimensions (W x H x D)	17.5 x 81 x 67.2 mm (0.68 x 3.19 x 2.65 in)
Weight	75 g (2.65 oz)
Terminals	Cable size from 0.05 to 2.5 mm^2 (AWG30 to AWG13), stranded or solid
Tightening torque	Max. 0.8 Nm (7.08 lbin)
Terminal type	Screw terminals

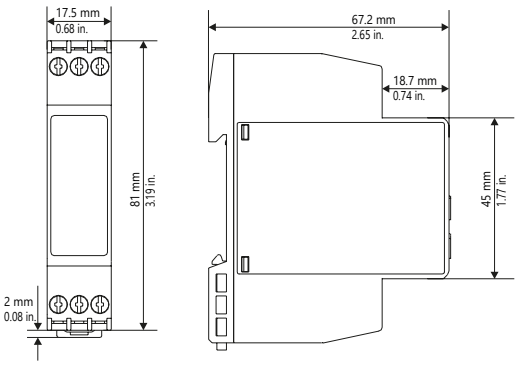

Environmental

Operating temperature	-20 to 60 °C (-4 to 140 °F)
Storage temperature	-30 to 80 °C (-22 to 176 °F)
Relative humidity	5 - 95% non condensing
Protection degree	IP20
Pollution degree	2
Operating max altitude	2000 m amsl (6560 ft)
Salinity	Non saline environment
UV resistance	No

Vibration/Shock resistance

Test condition	Test	Level
Tests with unpacked device	Vibration response (IEC60255-21-1)	Class 1
	Vibration endurance (IEC 60255-21-1)	Class 1
	Shock (IEC 60255-21-2)	Class 1
	Bump (IEC 60255-21-2)	Class 1
Tests with packed device	Vibration random (IEC60068-2-64)	Class 1
	Shock (IEC 60255-21-2)	Class 1
	Bump (IEC 60255-21-2)	Class 1

Class 1: monitoring devices for normal use in power plants, substations and industrial plants and for normal transportation conditions.

The packaging type is designed and implemented in such manner that the severity class parameters will not be exceeded during transportation.

Compatibility and conformity

Marking	CE
Directives	2014/35/EU (LVD - Low voltage) 2014/30/EU (EMC - Electromagnetic compatibility)
Standards	Insulation coordination: EN 60664-1 Immunity: EN61000-6-2 Emission: EN61000-6-3
Approvals	c UL us LISTED (UL508, max 40°C) CCC (GB/T14048.5)

Operating description

Device configuration

The relay operates when all the phases are present, the phase sequence is correct and the phase-phase voltage levels are within set limits.

The relay releases when one or more phase-phase voltages exceeds the upper set level or drops below the lower set level.

Undervoltage adjustment dial	
Typology	Linear selection from 2 to 22%
Resolution	2% setpoint increase per notch
Function	Relative undervoltage setpoint

Overvoltage adjustment dial	
Typology	Linear selection from 2 to 22%
Resolution	2% setpoint increase per notch
Function	Relative overvoltage setpoint

Delay setting dial	
Typology	Logarithmic adjustment from 0.1 to 30 s
Resolution	From 100 ms/notch at 0.1 s to 10 s/notch at 30 s
Function	Alarm ON delay setting for undervoltage and overvoltage

Mains nominal voltage setting dial	
Function	Selection of mains nominal voltage value

Alarms

DPB52 operates in 2 different modes depending upon the alarm type:

- Phase loss, incorrect phase sequence and out of range measurement cause immediate output relay de-energisation.
- Under or over voltage triggering cause output relay to turn OFF at the end of set delay.

Phase loss alarm	
Input variables	L1-L2, L2-L3 and L3-L1
Alarm setpoint	One phase ≤ 85% of the rated value (regenerated voltage detection)
Restore setpoint	All phases > 85% of the rated value + Hysteresis
Reaction time	≤ 200 ms
Repeatability	0.5% reading +1 V
Accuracy	1% reading + 1 V
Hysteresis	2% fixed
Delay ON	None
Delay OFF	None

Phase sequence alarm	
Input variables	Connection L1, L2, L3
Reaction time	≤ 200 ms
Hysteresis	None
Delay ON	None
Delay OFF	None

Over / under voltage alarms	
Input variables	V_{L12}, V_{L23}, V_{L31}
Reaction time	≤ 200 ms

Over / under voltage alarms	
Undervoltage setting range	From -2 to -22%
Overvoltage setting range	From 2 to 22%
Repeatability	0.5% reading +1 V
Accuracy	1% reading + 1 V
Hysteresis	2% fixed
Delay ON	Adjustable: from 0.1 to 30 s
Delay OFF	None

Measure out of range alarm	
Input variables	V_{L12}, V_{L23}, V_{L31}
Reaction time	≤ 200 ms
Repeatability	0.5% reading +1 V
Accuracy	1% reading + 1 V
Hysteresis	2%
Delay ON	None
Delay OFF	None

Information LEDs

Colour	Status		Description
Green / Red (AL)	Alarm	Green ON (steady)	OK
		Green flashing (2 Hz)	Alarm triggered but configured delay is elapsing
		1 red flash	Measure out of range alarm
		2 red flashes	Phase sequence alarm
		3 red flashes	Phase loss alarm
		4 red flashes	Undervoltage alarm
		5 red flashes	Overvoltage alarm
Yellow ( )	Relay output	ON	Energised
		OFF	De-energised

Operating diagram

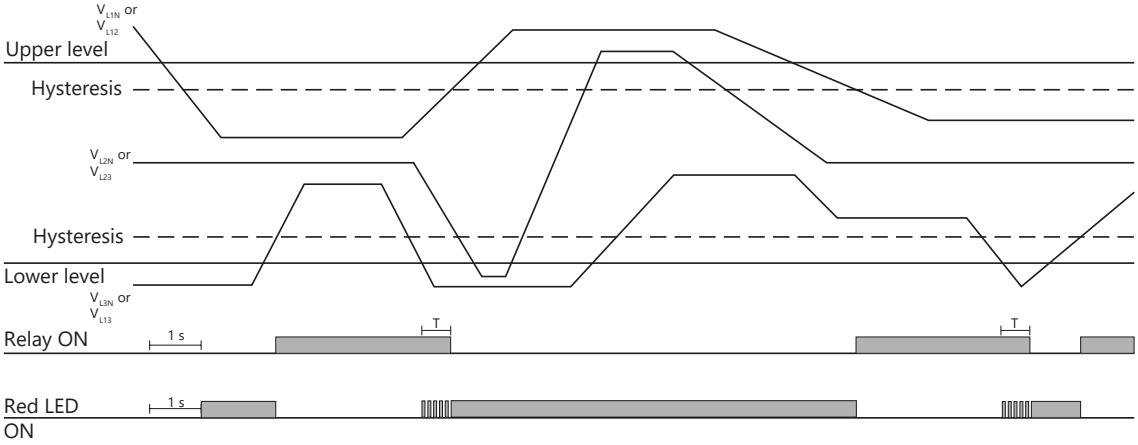

Over and undervoltage monitoring

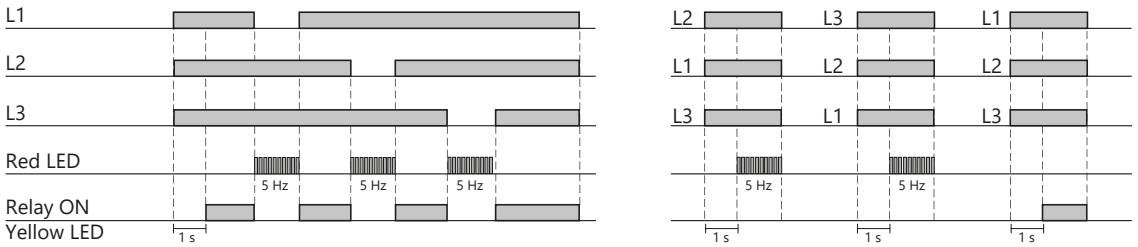

Total phase loss, phase sequence

Connection diagram

(*) NOTE: fuses F of 315 mA delayed, if required by local law.

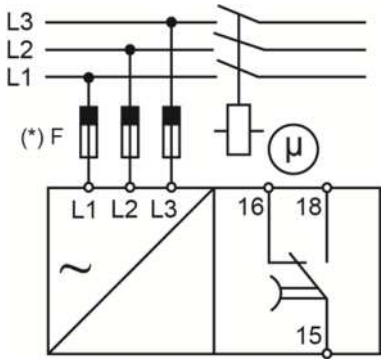

References

Further reading

Information	Where to find it	QR code
Installation manual	https://www.gavazziautomation.com/images/PIM/MANUALS/ENG/DPB52_IM.pdf	
PSS selection tool	https://carlogavazzi-pss.com/	

COPYRIGHT ©2026
Content subject to change. Download the PDF: www.gavazziautomation.com