FAIRCHILD SEMICONDUCTOR®

March 2007

74ABT2244
Octal Buffer/Line Driver with 25Ω Series Resistors in the Outputs

Features

- Guaranteed latchup protection
- High-impedance, glitch-free bus loading during entire power up and power down cycle
- Nondestructive, hot-insertion capability

General Description

The ABT2244 is an octal buffer and line driver designed to drive the capacitive inputs of MOS memory drivers, address drivers, clock drivers, and bus-oriented transmitters/receivers.

The 25Ω series resistors in the outputs reduce ringing and eliminate the need for external resistors.

Ordering Information

Order Number	Package Number	Package Description
74ABT2244CSC	M20B	20-Lead Small Outline Integrated Circuit (SOIC), JEDEC MS-013, 0.300" Wide
74ABT2244CSJ	M20D	20-Lead Small Outline Package (SOP), EIAJ TYPE II, 5.3mm Wide
74ABT2244CMSA	MSA20	20-Lead Shrink Small Outline Package (SSOP), JEDEC MO-150, 5.3mm Wide
74ABT2244CMTC	MTC20	20-Lead Thin Shrink Small Outline Package (TSSOP), JEDEC MO-153, 4.4mm Wide

Devices are also available in Tape and Reel. Specify by appending the suffix letter “X” to the ordering number.
Pb-Free package per JEDEC J-STD-020B.

Connection Diagram

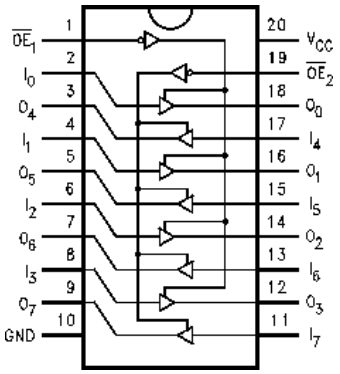

Schematic of Each Output

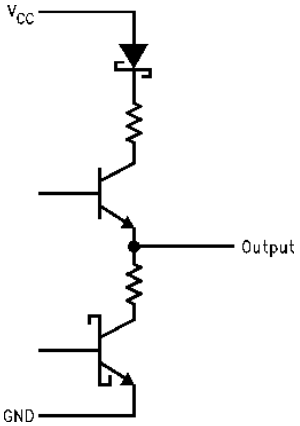

Pin Descriptions

Pin Names	Description
$\overline{OE}_1$, $\overline{OE}_2$	Output Enable Input (Active LOW)
I_0–I_7	Inputs
O_0–O_7	Outputs

Truth Table

$\overline{OE}_1$	$I_{0–3}$	$O_{0–3}$	$\overline{OE}_2$	$I_{4–7}$	$O_{4–7}$
H	X	Z	H	X	Z
L	H	H	L	H	H
L	L	L	L	L	L

H = HIGH Voltage Level X = Immaterial
L = LOW Voltage Level Z = High Impedance

©1992 Fairchild Semiconductor Corporation

Absolute Maximum Ratings

Stresses exceeding the absolute maximum ratings may damage the device. The device may not function or be operable above the recommended operating conditions and stressing the parts to these levels is not recommended. In addition, extended exposure to stresses above the recommended operating conditions may affect device reliability. The absolute maximum ratings are stress ratings only.

Symbol	Parameter	Rating
T_{STG}	Storage Temperature	–65°C to +150°C
T_A	Ambient Temperature Under Bias	–55°C to +125°C
T_J	Junction Temperature Under Bias	–55°C to +150°C
V_{CC}	V_{CC} Pin Potential to Ground Pin	–0.5V to +7.0V
V_{IN}	Input Voltage(1)	–0.5V to +7.0V
I_{IN}	Input Current(1)	–30mA to +5.0mA
V_O	Voltage Applied to Any Output Disabled or Power-off State HIGH State	 –0.5V to 5.5V –0.5V to V_{CC}
	Current Applied to Output in LOW State (Max.)	twice the rated I_{OL} (mA)
	DC Latchup Source Current (Across Comm Operating Range)	–300mA
	Over Voltage Latchup (I/O)	10V

Recommended Operating Conditions

The Recommended Operating Conditions table defines the conditions for actual device operation. Recommended operating conditions are specified to ensure optimal performance to the datasheet specifications. Fairchild does not recommend exceeding them or designing to absolute maximum ratings.

Symbol	Parameter	Rating
T_A	Free Air Ambient Temperature	–40°C to +85°C
V_{CC}	Supply Voltage	+4.5V to +5.5V
$\Delta V / \Delta t$	Minimum Input Edge Rate Data Input Enable Input	 50mV/ns 20mV/ns

©1992 Fairchild Semiconductor Corporation

DC Electrical Characteristics

Symbol	Parameter		V_{CC}	Conditions	Min.	Typ.	Max.	Units
V_{IH}	Input HIGH Voltage			Recognized HIGH Signal	2.0			V
V_{IL}	Input LOW Voltage			Recognized LOW Signal			0.8	V
V_{CD}	Input Clamp Diode Voltage		Min.	I_{IN} = –18mA			–1.2	V
V_{OH}	Output HIGH		Min.	I_{OH} = –3mA	2.5			V
				I_{OH} = –32mA	2.0			
V_{OL}	Output LOW Voltage		Min.	I_{OL} = 15mA			0.8	V
I_{IH}	Input HIGH Current		Max.	V_{IN} = 2.7V(3)			1	µA
				V_{IN} = V_{CC}			1	
I_{BVI}	Input HIGH Current Breakdown Test		Max.	V_{IN} = 7.0V			7	µA
I_{IL}	Input LOW Current		Max.	V_{IN} = 0.5V(3)			–1	µA
				V_{IN} = 0.0V			–1	
V_{ID}	Input Leakage Test		0.0	I_{ID} = 1.9µA, All Other Pins Grounded	475			V
I_{OZH}	Output Leakage Current		0–5.5V	V_{OUT} = 2.7V; $\overline{OE}$n = 2.0V			10	µA
I_{OZL}				V_{OUT} = 0.5V; $\overline{OE}$n = 2.0V			–10	
I_{OS}	Output Short-Circuit Current		Max.	V_{OUT} = 0.0V	–100		–275	mA
I_{CEX}	Output HIGH Leakage Current		Max.	V_{OUT} = V_{CC}			50	µA
I_{ZZ}	Bus Drainage Test		0.0	V_{OUT} = 5.5V, All Others GND			100	µA
I_{CCH}	Power Supply Current		Max.	All Outputs HIGH			50	µA
I_{CCL}				All Outputs LOW			30	mA
I_{CCZ}	Power Supply Current		Max.	$\overline{OE}$n = V_{CC}, All Others at V_{CC} or GND			50	µA
I_{CCT}	Additional I_{CC}/Input	Outputs Enabled	Max.	V_I = V_{CC} – 2.1V			2.5	mA
		Outputs 3-STATE		Enable Input V_I = V_{CC} – 2.1V			2.5	mA
		Outputs 3-STATE		Data Input V_I = V_{CC} – 2.1V, All Others at V_{CC} or GND			50	µA
I_{CCD}	Dynamic I_{CC} No Load(3)		Max.	Outputs OPEN, $\overline{OE}$n = GND(2), One-Bit Toggling, 50% Duty Cycle			0.1	mA/ MHz

Notes:

1. Either voltage limit or current limit is sufficient to protect inputs.
2. For 8-bit toggling, I_{CCD} < 0.8mA/MHz.
3. Guaranteed, but not tested.

©1992 Fairchild Semiconductor Corporation

AC Electrical Characteristics

SOIC and SSOP packages.

Symbol	Parameter	T_A = +25°C, V_{CC} = +5V, C_L = 50pF			T_A = –40°C to +85°C, V_{CC} = 4.5V–5.5V, C_L = 50pF		Units
		Min.	Typ.	Max.	Min.	Max.	
t_{PLH}	Propagation Delay, Data to Outputs	1.0	2.2	3.9	1.0	3.9	ns
t_{PHL}		1.0	2.9	4.4	1.0	4.4	
t_{PZH}	Output Enable Time	1.5	3.7	6.0	1.5	6.0	ns
t_{PZL}		2.1	4.3	7.0	2.1	7.0	
t_{PHZ}	Output Disable Time	1.7	3.5	5.8	1.7	5.8	ns
t_{PLZ}		1.7	3.7	5.8	1.7	5.8	

Capacitance

Symbol	Parameter	Conditions (T_A = 25°C)	Typ.	Units
C_{IN}	Input Capacitance	V_{CC} = 0V	5.0	pF
C_{OUT}(4)	Output Capacitance	V_{CC} = 5.0V	9.0	pF

Note:

4. C_{OUT} is measured at frequency f = 1MHz, per MIL-STD-883, Method 3012.

©1992 Fairchild Semiconductor Corporation

AC Loading

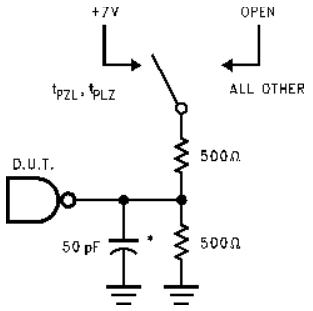

*Includes jig and probe capacitance

Figure 1. Standard AC Test Load

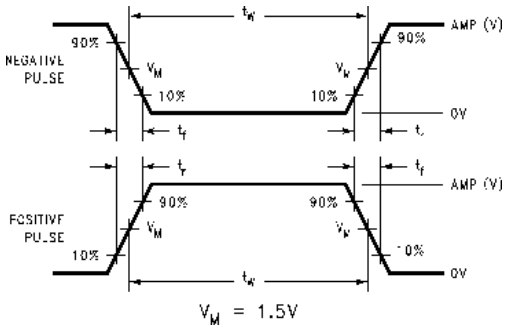

Figure 2. Test Input Signal Levels

Amplitude	Rep. Rate	t_w	t_r	t_f
3.0V	1MHz	500ns	2.5ns	2.5ns

Figure 3. Test Input Signal Requirements

AC Waveforms

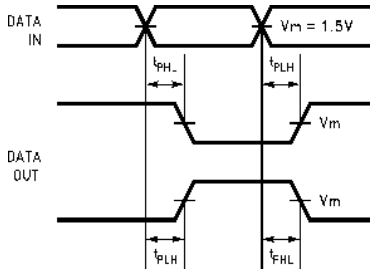

Figure 4. Propagation Delay Waveforms for Inverting and Non-Inverting Functions

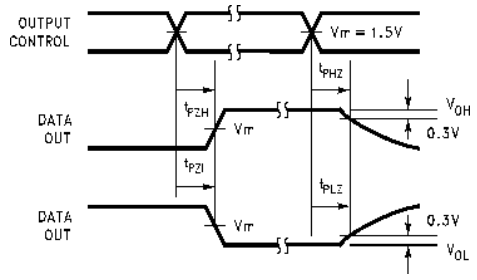

Figure 5. 3-STATE Output HIGH and LOW Enable and Disable Times

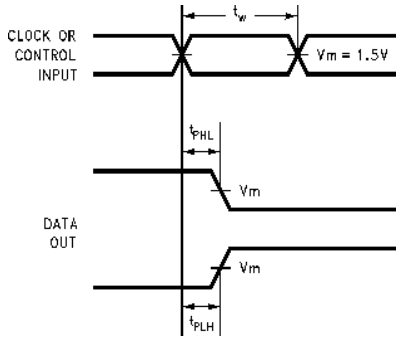

Figure 6. Propagation Delay, Pulse Width Waveforms

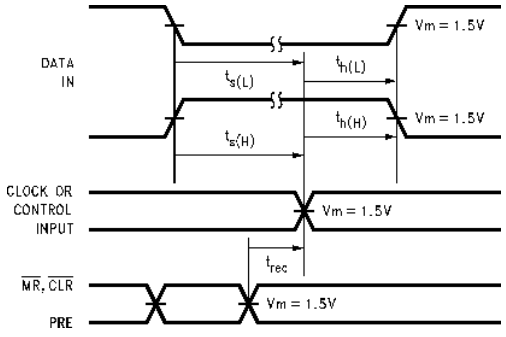

Figure 7. Setup Time, Hold Time and Recovery Time Waveforms

Physical Dimensions

Dimensions are in inches (millimeters) unless otherwise noted.

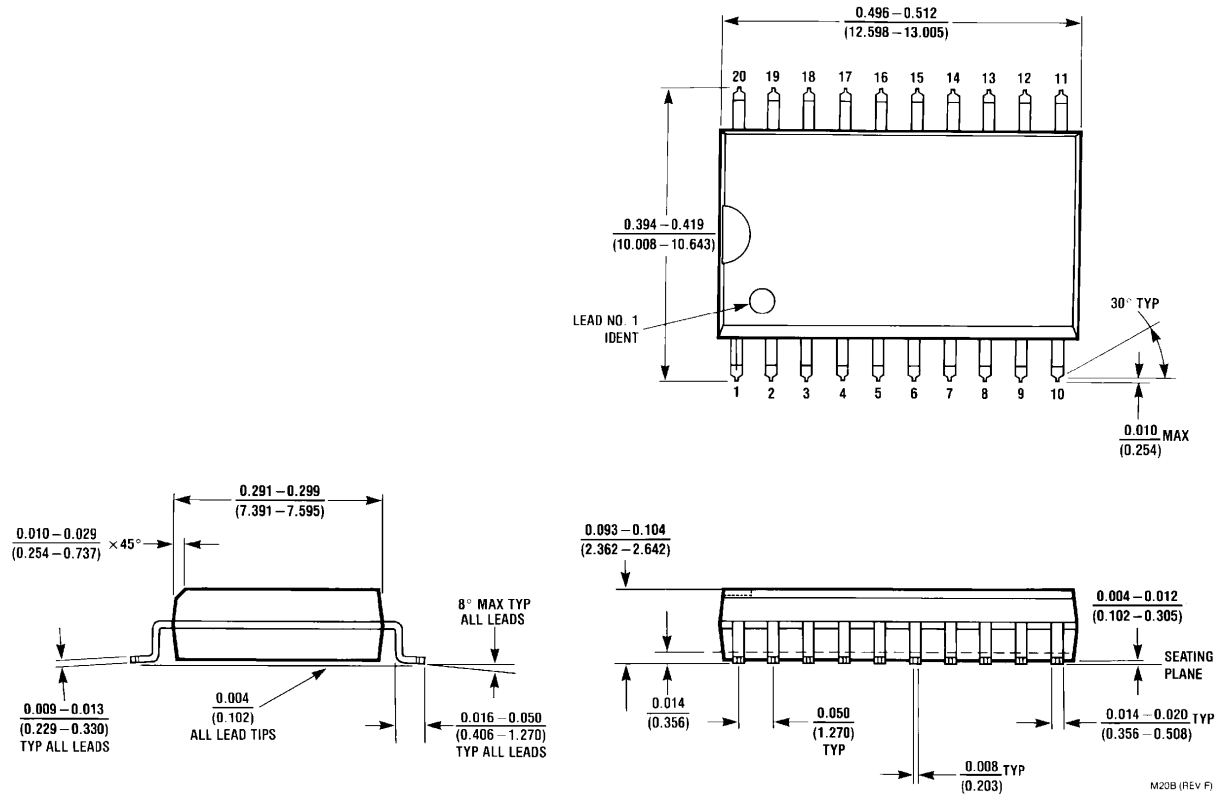

Figure 8. 20-Lead Small Outline Integrated Circuit (SOIC), JEDEC MS-013, 0.300" Wide
Package Number M20B

Physical Dimensions (Continued)

Dimensions are in millimeters unless otherwise noted.

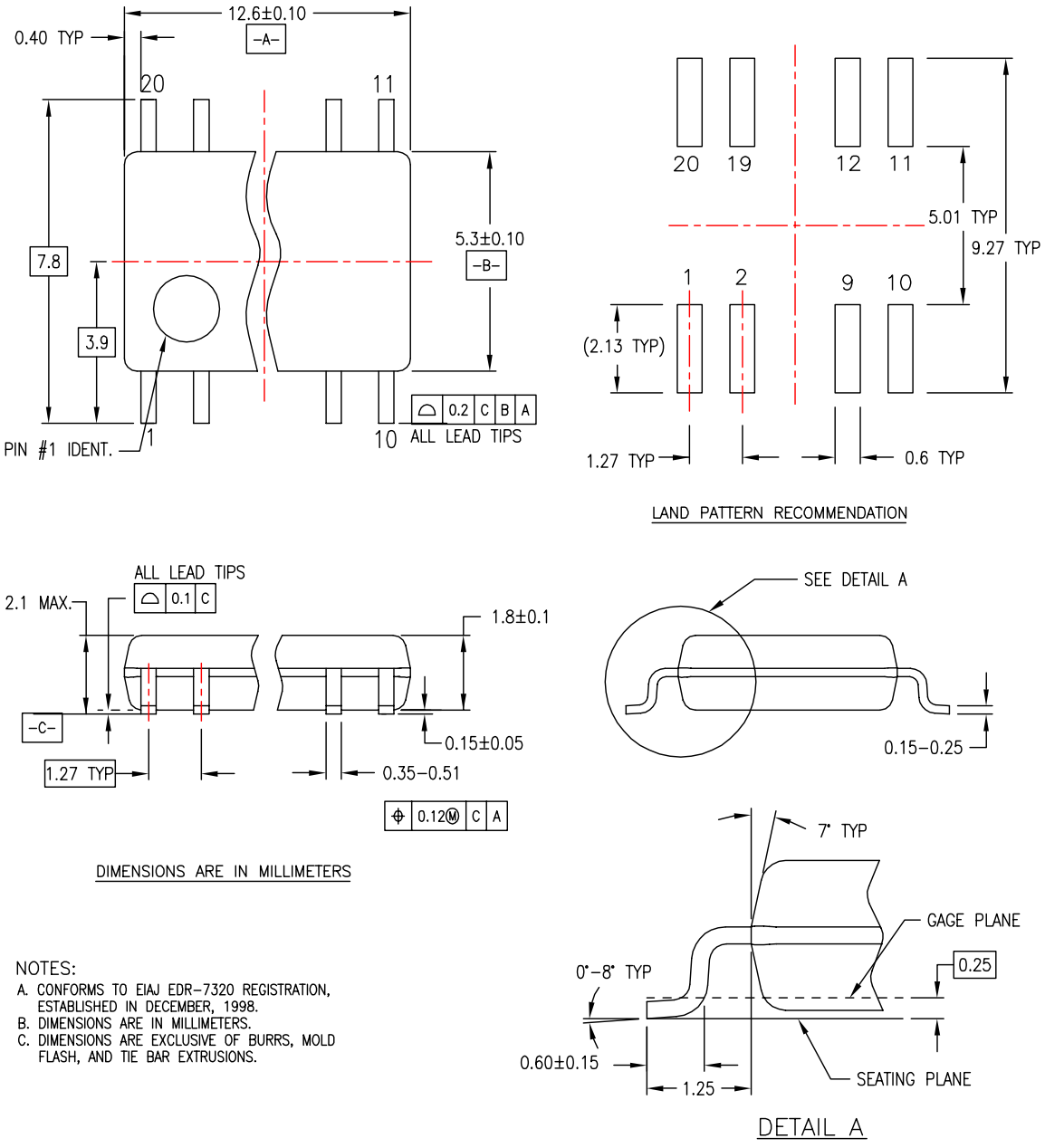

NOTES:

A. CONFORMS TO EIAJ EDR-7320 REGISTRATION, ESTABLISHED IN DECEMBER, 1998.
B. DIMENSIONS ARE IN MILLIMETERS.
C. DIMENSIONS ARE EXCLUSIVE OF BURRS, MOLD FLASH, AND TIE BAR EXTRUSIONS.

M20DREVC

Figure 9. 20-Lead Small Outline Package (SOP), EIAJ TYPE II, 5.3mm Wide
Package Number M20D

Physical Dimensions (Continued)

Dimensions are in millimeters unless otherwise noted.

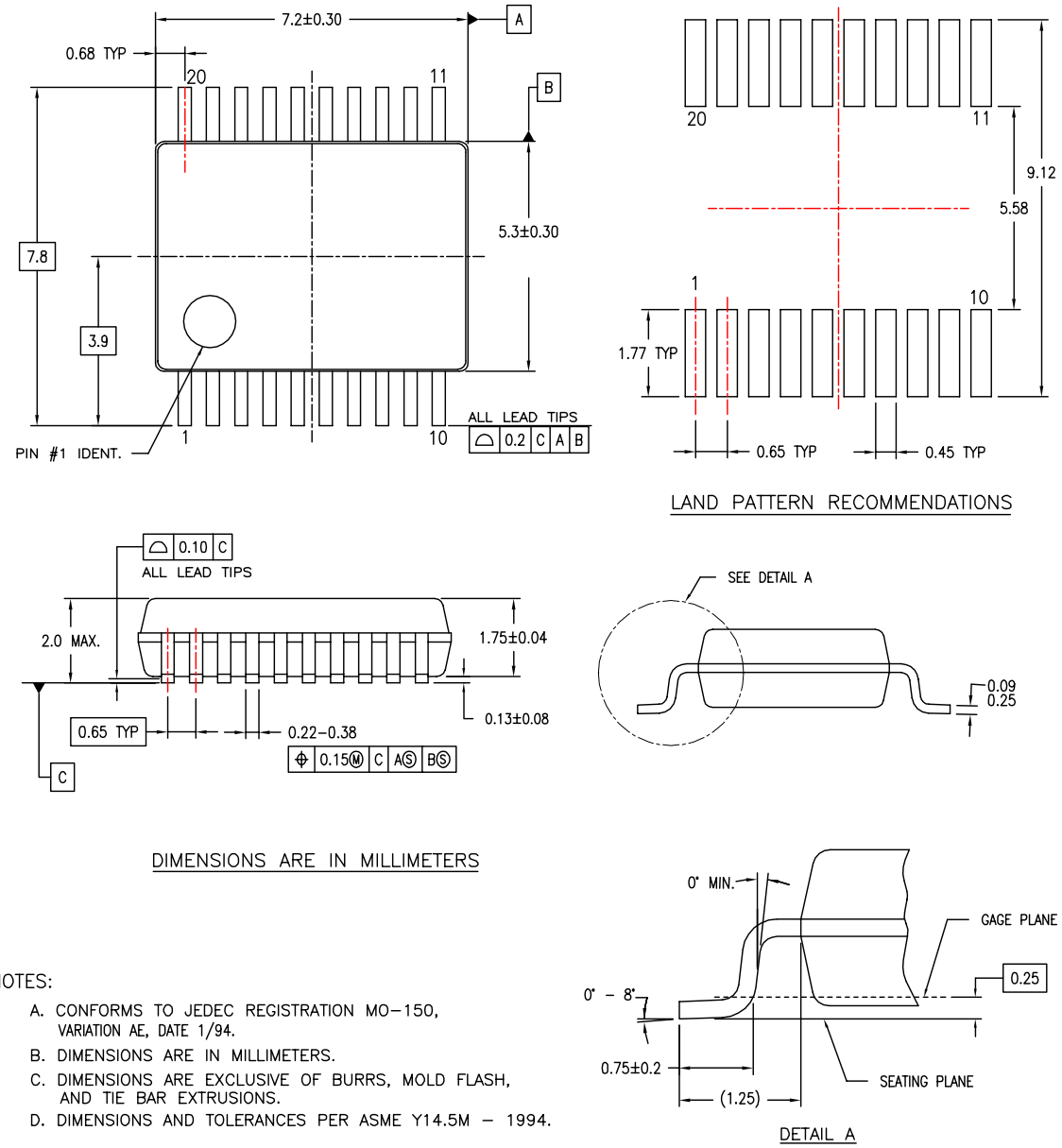

NOTES:

A. CONFORMS TO JEDEC REGISTRATION MO–150, VARIATION AE, DATE 1/94.

B. DIMENSIONS ARE IN MILLIMETERS.

C. DIMENSIONS ARE EXCLUSIVE OF BURRS, MOLD FLASH, AND TIE BAR EXTRUSIONS.

D. DIMENSIONS AND TOLERANCES PER ASME Y14.5M – 1994.

MSA20REVB

Figure 10. 20-Lead Shrink Small Outline Package (SSOP), JEDEC MO-150, 5.3mm Wide
Package Number MSA20

Physical Dimensions (Continued)

Dimensions are in millimeters unless otherwise noted.

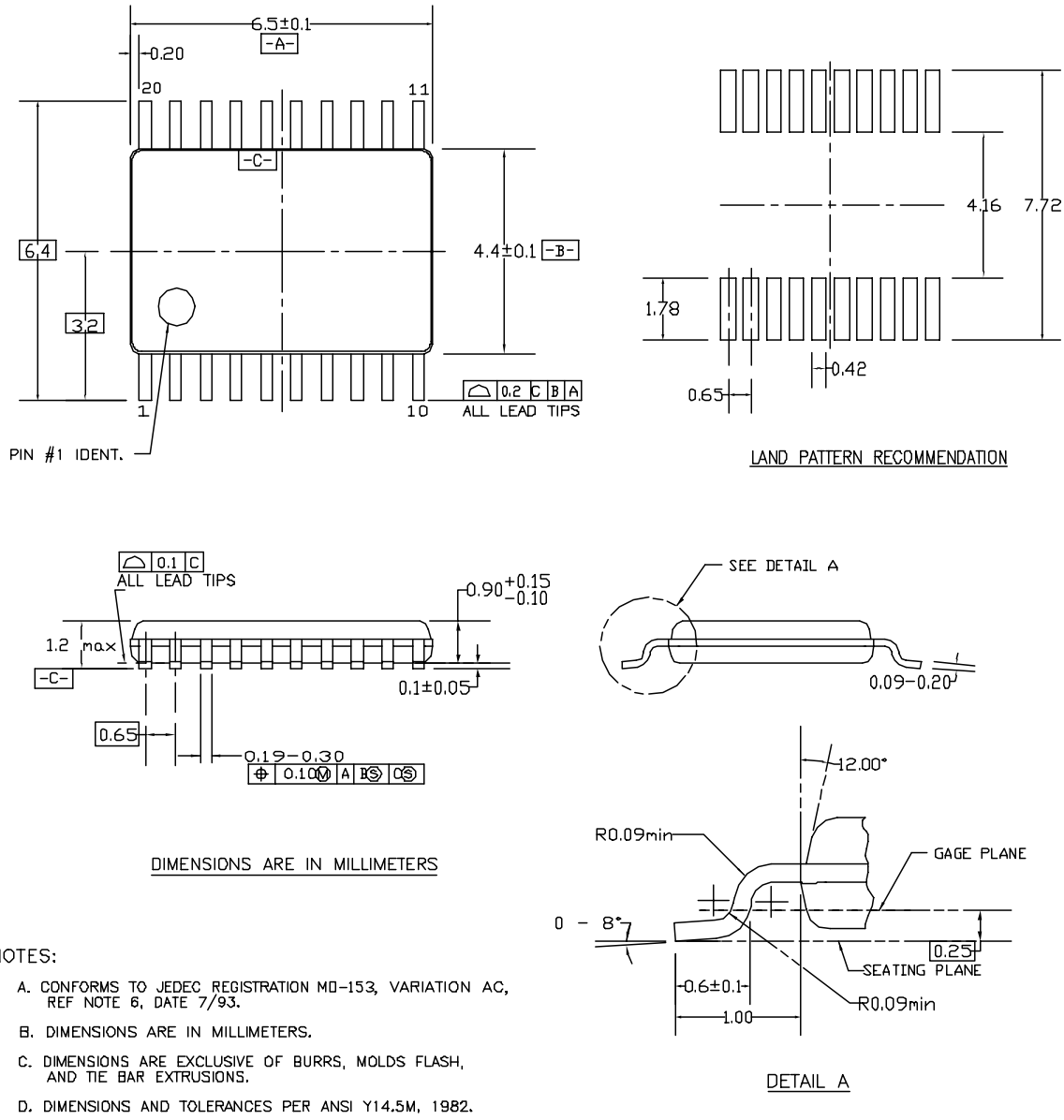

NOTES:

A. CONFORMS TO JEDEC REGISTRATION MO-153, VARIATION AC, REF NOTE 6, DATE 7/93.

B. DIMENSIONS ARE IN MILLIMETERS.

C. DIMENSIONS ARE EXCLUSIVE OF BURRS, MOLDS FLASH, AND TIE BAR EXTRUSIONS.

D. DIMENSIONS AND TOLERANCES PER ANSI Y14.5M, 1982.

MTC20REVD1

Figure 11. 20-Lead Thin Shrink Small Outline Package (TSSOP), JEDEC MO-153, 4.4mm Wide
Package Number MTC20

FAIRCHILD SEMICONDUCTOR®

TRADEMARKS

The following are registered and unregistered trademarks Fairchild Semiconductor owns or is authorized to use and is not intended to be an exhaustive list of all such trademarks.

ACEx®
Across the board. Around the world.™
ActiveArray™
Bottomless™
Build it Now™
CoolFET™
CROSSVOLT™
CTL™
Current Transfer Logic™
DOME™
E²CMOS™
EcoSPARK®
EnSigna™
FACT Quiet Series™
FACT®
FAST®
FASTr™
FPS™
FRFET®
GlobalOptoisolator™
GTO™
HiSeC™
i-Lo™
ImpliedDisconnect™
IntelliMAX™
ISOPLANAR™
MICROCOUPLER™
MicroPak™
MICROWIRE™
MSX™
MSXPro™
OCX™
OCXPro™
OPTOLOGIC®
OPTOPLANAR®
PACMAN™
POP™
Power220®
Power247®
PowerEdge™
PowerSaver™
PowerTrench®
Programmable Active Droop™
QFET®
QS™
QT Optoelectronics™
Quiet Series™
RapidConfigure™
RapidConnect™
ScalarPump™
SMART START™
SPM®
STEALTH™
SuperFET™
SuperSOT™-3
SuperSOT™-6
SuperSOT™-8
SyncFET™
TCM™
The Power Franchise®
™
TinyBoost™
TinyBuck™
TinyLogic®
TINYOPTO™
TinyPower™
TinyWire™
TruTranslation™
μSerDes™
UHC®
UniFET™
VCX™
Wire™

DISCLAIMER

FAIRCHILD SEMICONDUCTOR RESERVES THE RIGHT TO MAKE CHANGES WITHOUT FURTHER NOTICE TO ANY PRODUCTS HEREIN TO IMPROVE RELIABILITY, FUNCTION OR DESIGN. FAIRCHILD DOES NOT ASSUME ANY LIABILITY ARISING OUT OF THE APPLICATION OR USE OF ANY PRODUCT OR CIRCUIT DESCRIBED HEREIN; NEITHER DOES IT CONVEY ANY LICENSE UNDER ITS PATENT RIGHTS, NOR THE RIGHTS OF OTHERS. THESE SPECIFICATIONS DO NOT EXPAND THE TERMS OF FAIRCHILD'S WORLDWIDE TERMS AND CONDITIONS, SPECIFICALLY THE WARRANTY THEREIN, WHICH COVERS THESE PRODUCTS.

LIFE SUPPORT POLICY

FAIRCHILD'S PRODUCTS ARE NOT AUTHORIZED FOR USE AS CRITICAL COMPONENTS IN LIFE SUPPORT DEVICES OR SYSTEMS WITHOUT THE EXPRESS WRITTEN APPROVAL OF FAIRCHILD SEMICONDUCTOR CORPORATION.

As used herein:

1. Life support devices or systems are devices or systems which, (a) are intended for surgical implant into the body or (b) support or sustain life, and (c) whose failure to perform when properly used in accordance with instructions for use provided in the labeling, can be reasonably expected to result in a significant injury of the user.
2. A critical component in any component of a life support, device, or system whose failure to perform can be reasonably expected to cause the failure of the life support device or system, or to affect its safety or effectiveness.

PRODUCT STATUS DEFINITIONS

Definition of Terms

Datasheet Identification	Product Status	Definition
Advance Information	Formative or In Design	This datasheet contains the design specifications for product development. Specifications may change in any manner without notice.
Preliminary	First Production	This datasheet contains preliminary data; supplementary data will be published at a later date. Fairchild Semiconductor reserves the right to make changes at any time without notice to improve design.
No Identification Needed	Full Production	This datasheet contains final specifications. Fairchild Semiconductor reserves the right to make changes at any time without notice to improve design.
Obsolete	Not In Production	This datasheet contains specifications on a product that has been discontinued by Fairchild Semiconductor. The datasheet is printed for reference information only.

Rev. I24

©1992 Fairchild Semiconductor Corporation