Accessories

Inlet nozzles	550
Guard grilles	553
Lead connections, capacitors	558
Terminal boxes, air filters	562
Speed setting, motor protection switch, third-party accessories	564

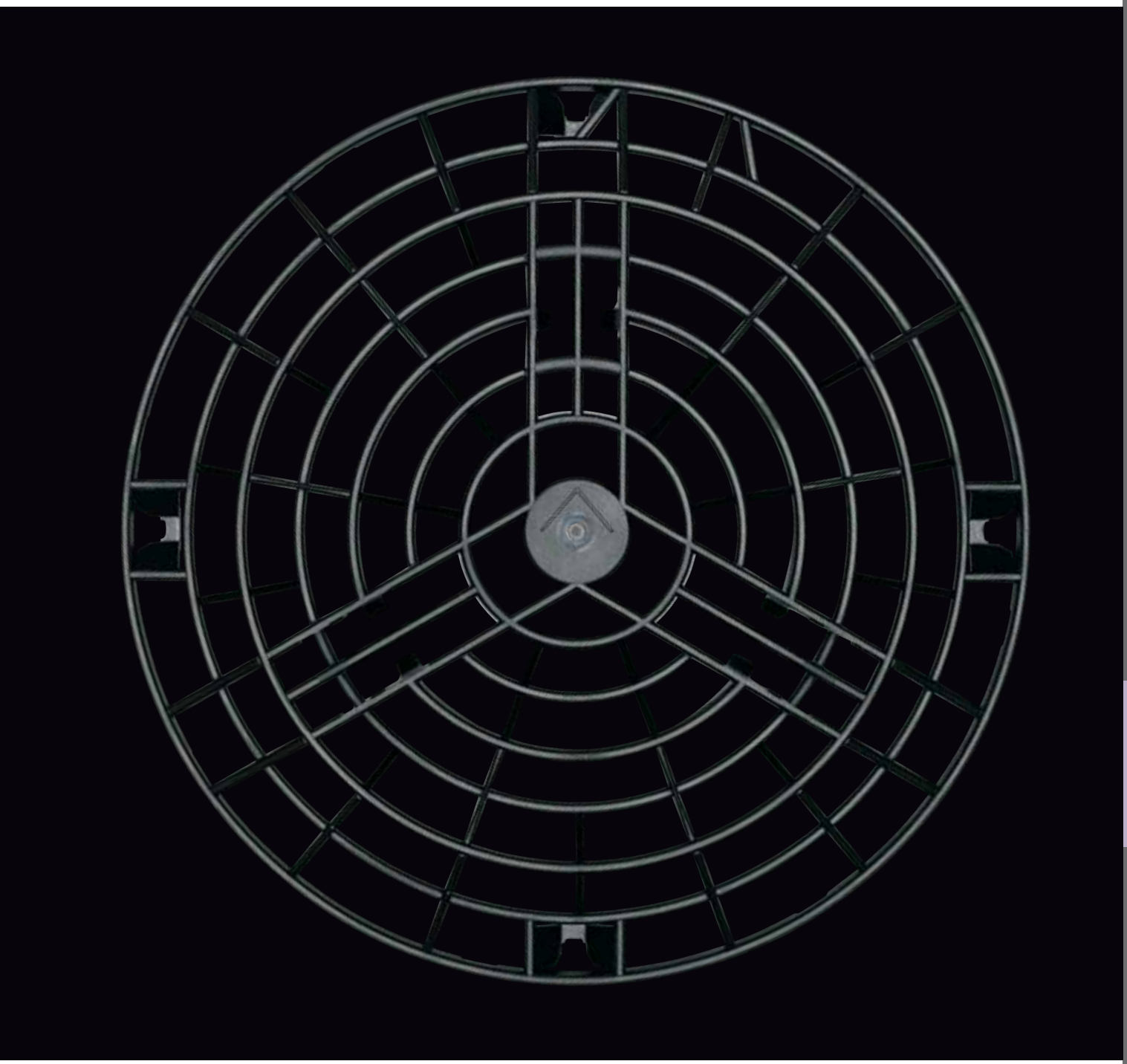

Inlet nozzles

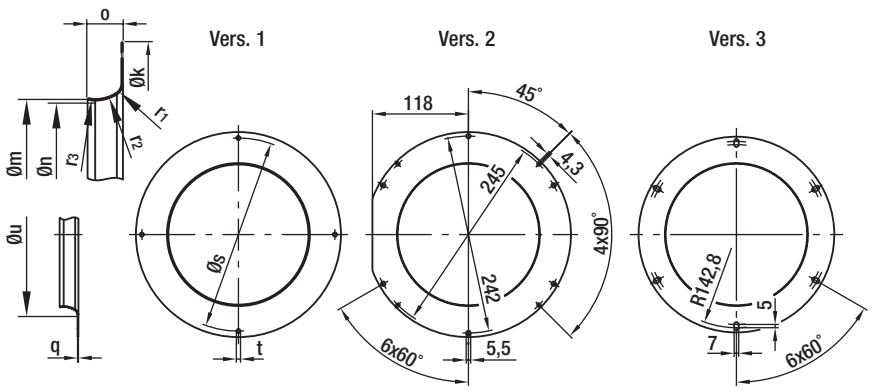

– **Material:** Galvanised sheet steel

Inlet nozzles for backward curved centrifugal fans

Part no.	Size[1]		Vers.	k	m	n	o	q	r_1	r_2	r_3	s	t	u
96120-2-4013	120	(P)	1	146.0	94.4	—	18.0	0.80	16.0	—	—	134.0	4x4.5	126.0
09566-2-4013	133	(P)	1	129.0	87.0	—	13.0	1.00	8.0	—	—	118.0	4x4.5	103.0
09576-2-4013	175/190	(P)	1	170.0	125.5	—	14.0	1.25	10.0	—	—	158.0	4x4.5	146.0
09609-2-4013	220	(P)	2	252.0	155.0	—	21.0	0.80	22.0	—	—	—	—	199.0
96358-2-4013	225	(P)	1	223.0	146.0	—	28.0	1.50	25.0	—	—	210.0	4x4.5	196.0
96359-2-4013	250	(P/S)	1	255.0	164.5	—	31.0	1.50	28.0	—	—	240.0	4x4.5	221.0
96360-2-4013	270/280	(S)	1	280.0	182.5	—	35.0	1.50	31.0	—	—	260.0	4x4.5	245.0
97512-2-4013	310	(P)	3	300.0	192.0	—	53.0	1.00	30.0	60.0	—	—	—	257.0
31050-2-4013	310	(A)	1	300.0	211.0	208.1	48.0	1.25	18.0	55.5	35.0	280.0	4x4.5	256.0
31051-2-4013	310[2]	(A)	1	300.0	211.0	209.2	27.5	1.25	10.0	32.0	20.0	280.0	4x4.5	236.0
51357-2-4013	330/355	(P)	1	350.0	224.0	—	60.0	1.50	54.0	28.0	—	325.0	4x4.5	284.0
35560-2-4013	355	(A)	1	350.0	240.0	236.4	60.0	1.50	22.5	70.0	44.0	325.0	4x4.5	296.0
35561-2-4013	355[2]	(A)	1	350.0	240.0	238.0	30.0	1.50	11.0	35.0	22.0	325.0	4x4.5	267.0
54476-2-4013	400	(A)	1	370.0	257.0	—	66.0	1.50	22.0	50.0	90.0	345.0	4x4.5	322.0
54478-2-4013	450	(A)	1	413.0	287.0	—	71.0	1.50	25.0	55.0	100.0	390.0	6x9	362.0
63045-2-4013	450	(A)	1	450.0	289.0	284.5	75.0	1.50	28.0	87.0	49.0	425.0	6x9	360.0
54480-2-4013	500	(A)	1	520.0	323.0	—	79.0	1.50	28.0	65.0	115.0	430.0	6x9	408.0
63072-2-4013	500	(A)	1	470.0	342.0	337.0	75.0	2.00	28.0	87.0	55.0	445.0	6x9	412.0
63071-2-4013	560	(A)	1	515.0	385.0	380.0	82.0	2.00	30.0	95.0	60.0	490.0	6x9	461.0
63070-2-4013	630	(A)	1	634.0	433.0	427.0	98.5	2.00	37.0	14.0	72.0	600.0	6x10.5	525.0

subject to alterations

(1) size with key for impeller material: (P) = plastic, (S) = sheet steel, (A) = aluminium (2) short inlet nozzle

Inlet nozzles with pressure-measuring point for air flow measurement

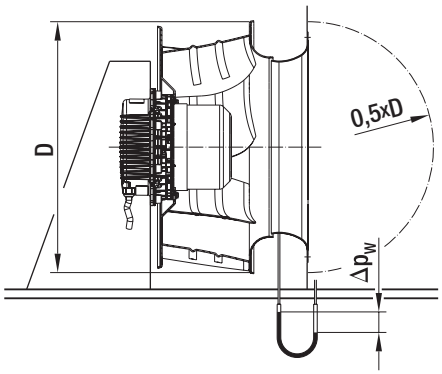

Air flow measurement:
The differential pressure approach compares the static pressure before the inlet nozzle with the static pressure inside the inlet nozzle.
Air flow can be calculated on the basis of the differential pressure (difference in pressure of the static pressures) in keeping with the following equation:

$\dot{V} = k \cdot \sqrt{\Delta p_W}$ $\dot{V}$ in [m³/h] and Δp_W in [Pa]

If constant air flow control is used, then the nozzle pressure has to be kept constant: $\Delta p_W = \dot{V}^2 : k^2$

k takes into account the specific nozzle characteristics.
1 or 4 pressure measuring points are spaced along the circumference of the inlet nozzle. Connection on the customer side is accomplished via a premounted T tube connector. This tube connector is suited for pneumatic hoses with an internal diameter of 4 mm.

Inlet nozzles with measuring device to determine air flow for backward curved centrifugal fans

Part no. with 1 nozzle	Part no. with 4 nozzles (Piezometer ring)	Size	k-value	For additional information, refer to p. 550
—	**96400-2-4013**	250	68	96359-2-4013
—	**96410-2-4013**	280	80	96360-2-4013
31100-2-4013	**31080-2-4013**	310	120	31050-2-4013
31110-2-4013	**31090-2-4013**	310	103	31051-2-4013
35600-2-4013	**35580-2-4013**	355	155	35560-2-4013
35610-2-4013	**35590-2-4013**	355	138	35561-2-4013
54515-2-4013	**54500-2-4013**	400	183	54476-2-4013
54514-2-4013	**54510-2-4013**	450	217	54478-2-4013
64015-2-4013	**64005-2-4013**	450	214	63045-2-4013
54518-2-4013	**54516-2-4013**	500	265	54480-2-4013
64025-2-4013	**64002-2-4013**	500	283	63072-2-4013
64030-2-4013	**64001-2-4013**	560	350	63071-2-4013
64040-2-4013	**64000-2-4013**	630	480	63070-2-4013

subject to alterations

Inlet nozzles

– **Material:** Galvanised sheet steel

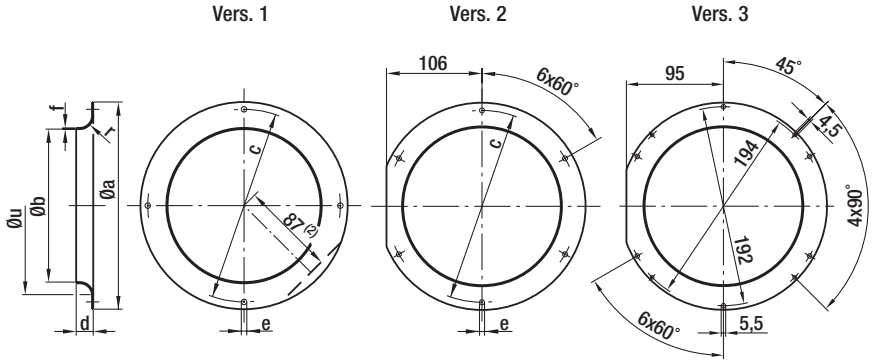

Inlet nozzles for forward curved centrifugal fans

Part no.	Size	Vers.	a	b	c	d	e	f	r	u
09560-2-4013	076 / 085 (1)	1	92.0	63.4	84.0	6.0	3x4.2	0.80	6.8	—
09563-2-4013	097 (1)	1	116.0	80.0	108.0	10.0	3x4.5	0.80	10.0	—
09566-2-4013	108	1	129.0	87.0	118.0	13.0	4x4.5	1.00	8.0	—
09569-2-4013	120	1	142.0	100.0	132.0	9.0	4x4.5	1.00	8.0	—
09572-2-4013	133	1	150.0	112.0	142.0	12.0	4x4.5	1.00	10.0	—
09576-2-4013	140 / 146	1	170.0	125.5	158.0	14.0	4x4.5	1.25	10.0	—
09588-2-4013	160	1 (2)	185.0	130.0	175.0	17.0	4x4.5	0.75	12.0	—
09597-2-4013	180	3	210.0	149.0	—	28.0	—	1.25	25.0	—
09605-2-4013	200 / 225	2	230.0	175.0	213.0	24.0	6x5.5	1.25	20.0	203.0
25010-2-4013	250 (3)	1	300.0	193.0	285.0	51.5	6x7	1.50	27.3	—
28010-2-4013	280 (3)	1	336.0	228.0	315.0	58.5	6x7	1.50	36.5	296.0
31010-2-4013	310 (3)	1	374.0	257.0	350.0	62.5	6x9	1.50	39.5	327.0
35510-2-4013	355 (3)	1	413.0	289.0	390.0	71.5	6x9	1.50	43.5	372.0
40010-2-4013	400 (3)	1	456.0	325.0	430.0	79.5	6x9	1.50	45.5	414.0
45010-2-4013	450 (3)	1	530.0	365.0	510.0	91.5	6x9	1.50	49.5	459.0

subject to alterations (1) 3 drilled holes staggered by 120° (2) only for 09588-2-1013 (3) 6 drilled holes staggered by 60°

Guard grille

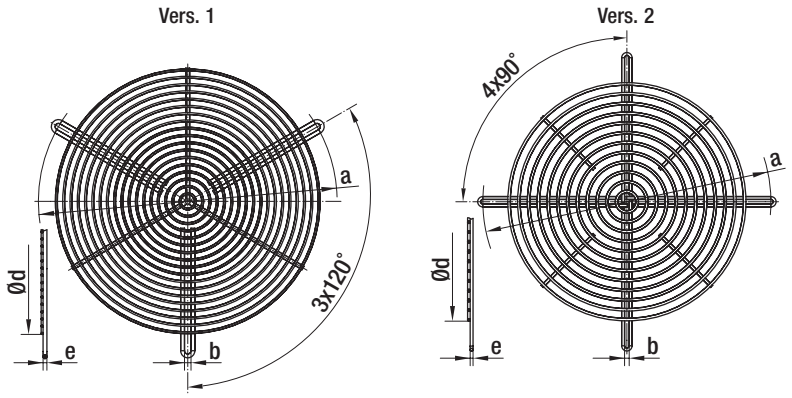

– **Material:** Steel wire, plastic coated, silver-metallic gloss

Guard grille for backward curved centrifugal fans (according to EN 294)

Part no.	Size	Vers.	a	b	d	e
78130-2-4039	310	1	280.0	4.5	230.0	2.8
78132-2-4039	400	1	345.0	4.5	310.0	2.8
78136-2-4039	450	2	425.0	8.5	350.0	3.8
78139-2-4039	500	2	445.0	8.5	410.0	3.8
78137-2-4039	560	2	490.0	8.5	430.0	3.8
78138-2-4039	630	2	600.0	8.5	490.0	3.8

subject to alterations

Guard grille

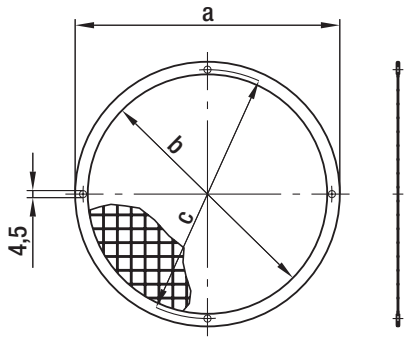

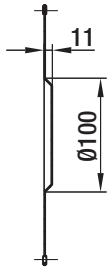

(4) Size 160

– **Material:** Welded grille made of galvanised steel, frame made of tinned sheet iron 0.4 mm thick

Guard grilles for centrifugal blowers with single inlet

Part no.	Size	a	b	c
09489-2-4039	076 / 085 (3)	90.0	74.0	84.0
09490-2-4039	108	126.0	110.0	118.0
09494-2-4039	120	140.0	124.0	132.0
09492-2-4039	140 / 146	168.0	152.0	158.0
09503-2-4039	160 (4)	183.0	170.0	175.0
09493-2-4039	180 (5)	205.0	189.0	194.0

subject to alterations (3) 3 drilled holes staggered by 120° (5) not suitable for G2E180-EH03-01

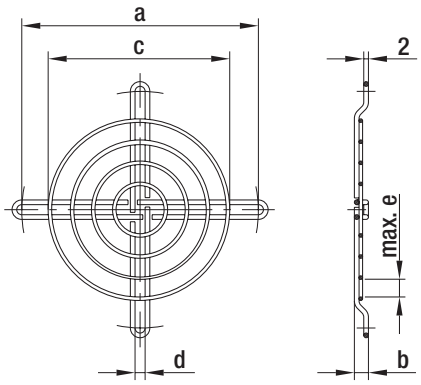

– **Material:** Steel wire

Guard grilles for centrifugal blowers with single inlet

Part no.	Size	a	b	c	d	e	Coating
09603-2-4039	076 / 085	101.0	6.0	79.0	4.3	8.0	plastic coated, silver-metallic gloss
98214-2-4039	108	120.0	3.5	88.0	4.3	8.0	plastic coated, silver-metallic gloss
25028-2-4039	140 / 146	162.0	8.5	139.0	4.3	8.0	galvanised, chromatised in blue
17729-2-4039	160	175.0	3.5	139.0	4.6	7.0	galvanised, chromatised in blue
09526-2-4039	180 (6)	194.0	39.5	164.0	4.3	8.0	phosphated, plastic coated in RAL no. 9005

subject to alterations (6) only suitable for G2E180-EH03-01

Guard grille

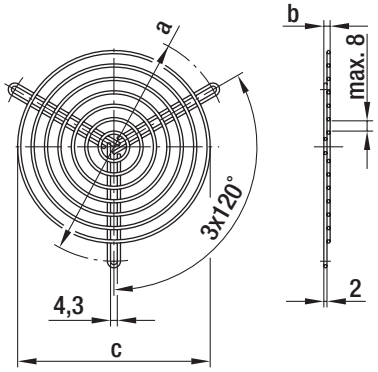

– **Material:** Steel wire

Guard grilles for centrifugal blowers with dual inlet

Part no.	Size	a	b	c	Coating
83319-2-4039	097 (1)	96.0	3.5	71.0	phosphated, plastic coated in RAL no. 9005
09485-2-4039	097 (2)	114.0	3.5	88.0	phosphated, plastic coated in RAL no. 9005
09500-2-4039	133 / 146	145.0	4.0	122.0	phosphated, plastic coated in RAL no. 9005
31003-2-4039	180	192.0	9.5	174.0	phosphated, plastic coated in RAL no. 9005
95644-2-4039	200	250.0	5.0	206.0	plastic coated, silver-metallic gloss

subject to alterations (1) for D2E097-CH (2) for D2E097-B*

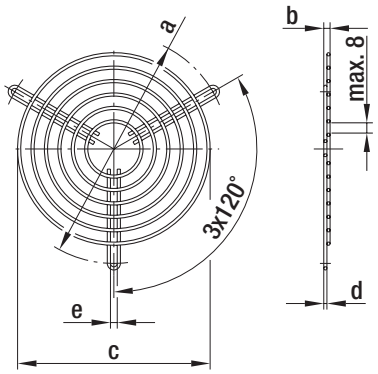

– **Material:** Phosphated steel wire, plastic coated, silver-metallic gloss

Guard grilles for centrifugal blowers with dual inlet (versions with EW motor)

Part no.	Size	a	b	c	d	e
35000-2-4039	160	182.0	12.0	144.0	2.4	4.5
62226-2-4039	180	192.0	9.0	173.0	3.0	5.2
62227-2-4039	200	213.0	9.0	190.0	3.0	5.2
62228-2-4039	225 / 240	242.0	9.0	222.0	3.0	5.2
25825-2-4039	250	275.0	9.0	255.0	3.0	5.2

subject to alterations

Guard grille

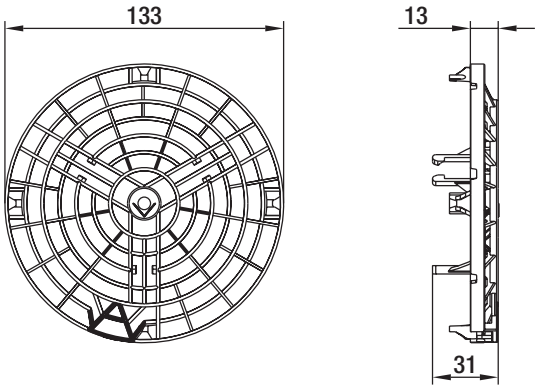

- **Material:** PA plastic 6.6 GV25 V0, black
- **Special feature:** Triangular, raised contour
- **Suitable for:**
  D2E140-HR; D2E146-KA; D2E146-KB;
  D2E146-HR; D2E146-HS; D2E146-HT;
  D4E146-LV

Guard grilles for blowers with dual inlet with plastic housing (cable exit side of blower)

Part no.
34265-2-2929

subject to alterations

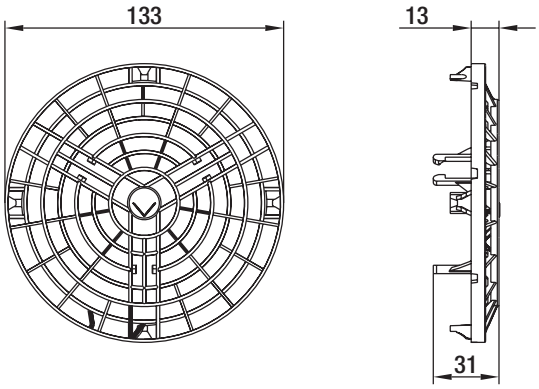

- **Material:** PA plastic 6.6 GV25 V0, black
- **Special feature:** Outer two rings are closed
- **Suitable for:**
  D2E140-HR; D2E146-KA; D2E146-KB;
  D2E146-HR; D2E146-HS; D2E146-HT;
  D4E146-LV; K4E146-AB

Guard grilles for blowers with dual inlet with plastic housing (side of blower opposite cable exit)

Part no.
38182-2-2929

subject to alterations

Guard grille

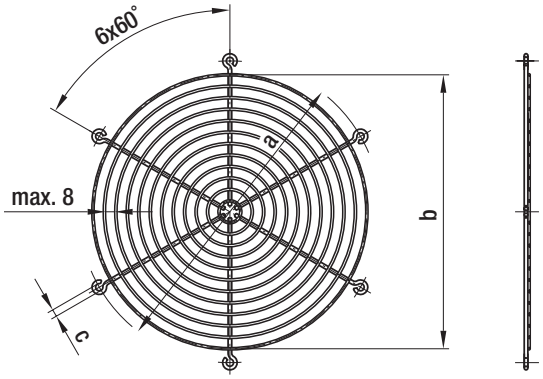

– **Material:** Phosphated steel wire, plastic coated in RAL no. 9005, black

Guard grilles (e.g. for axial fans)

Part no.	Size	a	b	c
09513-2-4039	200	250.0	227.0	6.0
09518-2-4039	250	295.0	265.0	7.0
09532-2-4039	300	380.0	323.0	9.0

subject to alterations

Connection leads

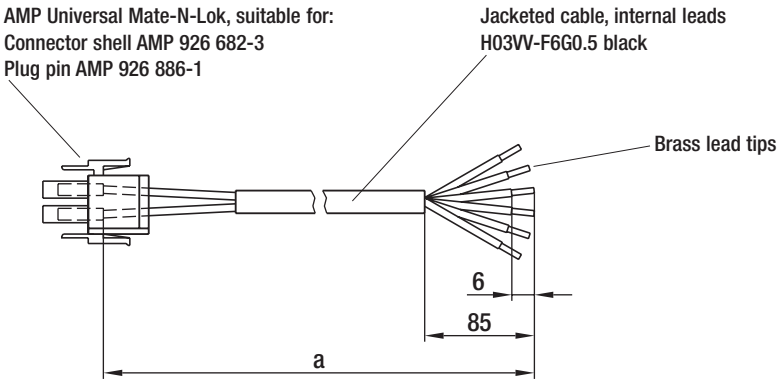

- **Suitable for:**
  D2E140-HR; D2E146-KA; D2E146-KB; D2E146-HR; D2E146-HS; D2E146-HT; D2E160-FI; D2E160-FK
- **Plug assignment:**
  1 = Step 1 (white)
  2 = Step 2 (red)
  3 = Step 3 (grey)
  4 = Step 4 (black)
  5 = N (blue)
  6 = PE (green/yellow)

Lead connections for centrifugal blowers

Part no.	a
21956-4-1040	300.0
21957-4-1040	450.0
21958-4-1040	650.0
21959-4-1040	1000.0

subject to alterations

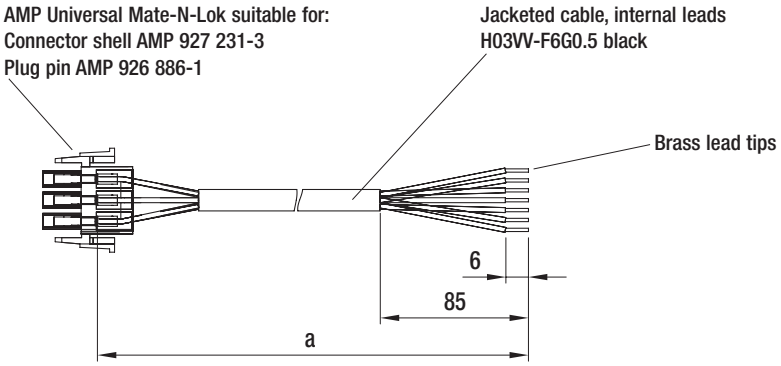

- **Suitable for:**
  D4E146-LV; K4E146-AB
- **Plug assignment:**
  1 = Step 1 (white)
  2 = Step 2 (red)
  3 = Step 3 (grey)
  4 = Step 4 (orange)
  5 = Step 5 (black)
  8 = N (blue)
  9 = PE (green/ yellow)

Lead connections for centrifugal blowers

Part no.	a
21810-4-1012	450.0
21811-4-1012	1050.0
21812-4-1012	1300.0
21813-4-1012	1600.0
21814-4-1012	2300.0

subject to alterations

Connection leads

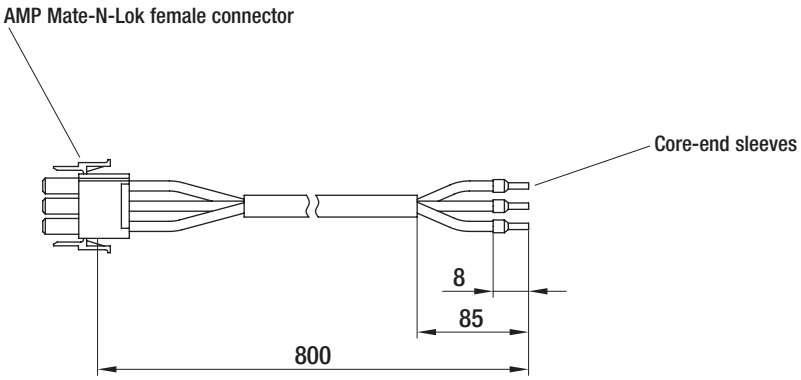

– **Plug assignment:**

1 =	N	(black 2)
2 =	L	(black 1)
3 =	PE	(green / yellow)

Line lead for EC centrifugal fans (clean room technology)

Part no.

22243-4-1029

subject to alterations

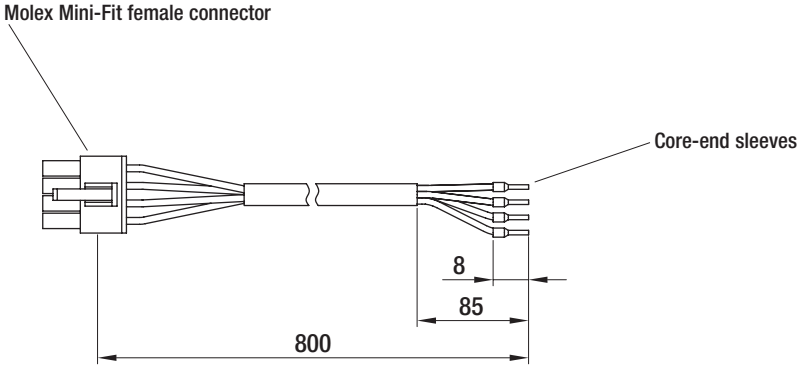

– **Plug assignment:**

1 =	RSB	(white)
2 =	RSA	(yellow)
3 =	+15 V	(red)
4 =	0 V	(blue)

Control line for EC centrifugal fans (clean room technology)

Part no.

22242-4-1029

subject to alterations

Capacitors

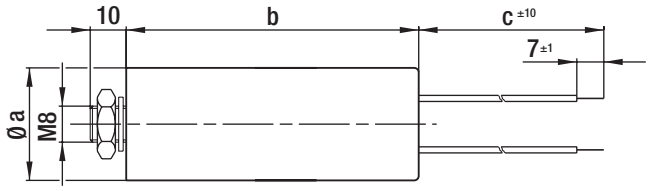

- **Material:** Housing made of Thermoplast
- **Connection lead:** Multi-lead PVC cable 0.5 mm² with brass lead tips
- **Approval:** VDE according to DIN EN 60252 (VDE 0560/8)
- **Calculated life time:**
  400 V; -25 to +85°C; 30,000 hrs; class A
  450 V; -25 to +85°C; 10,000 hrs; class B

MKP motor capacitors (without fuse)

Part no.	Capacity	a	b (max.)	c
02100-4-7320	1.0 µF	25-28	58.0	235.0
99282-4-7320	1.5 µF	25-28	58.0	235.0
99283-4-7320	2.0 µF	25-28	58.0	235.0
02103-4-7320	2.5 µF	25-28	70.0	235.0
68462-4-7320	3.0 µF	25-28	70.0	235.0
99284-4-7320	4.0 µF	28-32	58.0	235.0
02101-4-7320	5.0 µF	30-36	70.0	235.0
99285-4-7320	6.0 µF	30-36	70.0	235.0
66788-4-7320	7.0 µF	30-36	72.0	100.0
99286-4-7320	8.0 µF	35-40	72.0	235.0
99287-4-7320	10.0 µF	35-40	72.0	200.0
66786-4-7320	12.0 µF	40.0	72.0	100.0
30457-4-7320	14.0 µF	40-45	92.0	150.0
50090-4-7320	16.0 µF	35-40	95.0	100.0
90034-4-7320	20.0 µF	40.0	95.0	235.0
90025-4-7320	25.0 µF	40.0	120.0	235.0

subject to alterations

Capacitors

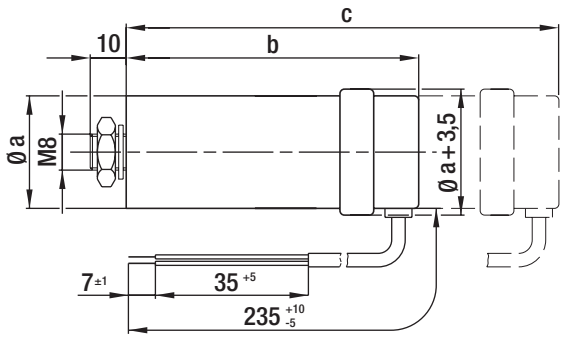

- **Material:** Plastic cap, aluminium cup
- **Designation:** FPU or P2 according to IEC 252 (non-flammable, non-explosive, circuit-breaking)
- **Approval:** VDE according to DIN EN 60252 (VDE 0560/8)
- **Calculated life time:**
  420 V; -25 to +85°C; 30,000 hrs; class A
  470 V; -25 to +85°C; 10,000 hrs; class B
  500 V; -25 to +85°C; 3,000 hrs; class C

MKP motor capacitors FPU or P2 (with fuse)

Part no.	Capacity	a	b (max.)	c (max.)
02151-4-7320	1.0 µF	25-30	77.0	92.0
02155-4-7320	1.5 µF	25.0	77.0	92.0
02156-4-7320	2.0 µF	25.0	77.0	92.0
02159-4-7320	2.5 µF	30.0	71.0	92.0
02160-4-7320	3.0 µF	30.0	71.0	92.0
02161-4-7320	4.0 µF	25-30	104.0	135.0
02162-4-7320	5.0 µF	25-30	104.0	113.0
02163-4-7320	6.0 µF	30.0	101.0	110.0
02164-4-7320	7.0 µF	30-35	101.0	110.0
02165-4-7320	8.0 µF	30-35	102.0	111.0
02166-4-7320	10.0 µF	35.0	96.0	110.0
02167-4-7320	12.0 µF	35.0	96.0	110.0
90026-4-7320	14.0 µF	40.0	130.0	139.0
02168-4-7320	16.0 µF	40.0	96.0	130.0
02169-4-7320	20.0 µF	40.0	116.0	130.0
02170-4-7320	25.0 µF	40-45	116.0	130.0

subject to alterations

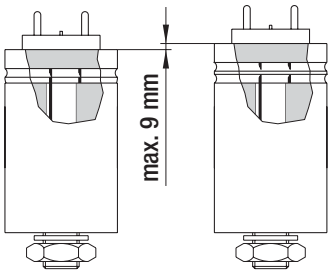

- **Pull-off protector:** The housing expands by max. 9 mm. The protector responds to overload by the generated excess pressure snapping off the internal lead in a predetermined breaking point.
- **Mounting:** c is the overall dimension of the capacitor which has to be taken into account when mounting the part. The capacitor design, however, depends on the manufacturer. The expansion (9 mm) is either added to dimension b, or it is already integrated in the capacitor.

Terminal box

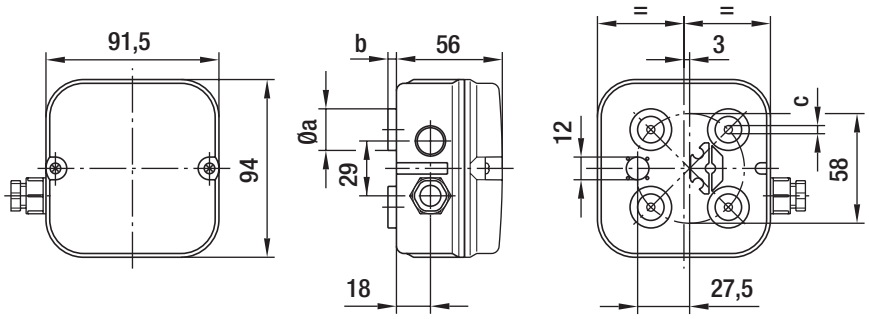

- **Material:** ABS
- **Description:** Two-piece terminal box for AC motors of size 068 or 074, terminal strip with 4- or 7-pole. Suitable for installation of capacitor with 10 µF max.
- **Type of protection:** IP 54

Terminal box

Part no.	AC motor	a	b	c
64442-1-7612	068 (4 poles)	22.0	5.0	4.3
64444-1-7612	068 (7 poles)	22.0	5.0	4.3
64443-1-7612	074 (4 poles)	12x14.5	10.5	5.5
64445-1-7612	074 (7 poles)	12x14.5	10.5	5.5

subject to alterations

Air filter

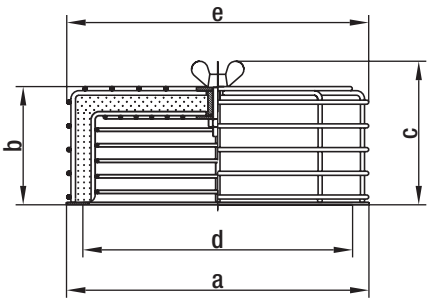

- **Material:** Steel wire / sheet steel, plastic coated in RAL no. 9005, black
- **Filter:** Viledon filter type R: PSB / 29 OS (according to DIN 24185)
  Separation capacity: < 86 %
  Efficiency: < 20 %
  Dust binding capacity: 650 g/m²

Air filters for centrifugal blowers (with die-cast aluminium housing)

Part no.	Size	a	b	c	d	e	Spare filter
95777-1-5171	108 / 120	142.0	66.0	83.0	118-132	145.0	95779-1-5171
95778-1-5171	140 / 146 / 160	185.0	74.0	91.0	158-175	185.0	95780-1-5171
95347-1-5171	180	210.0	74.0	91.0	194.0	185.0	95780-1-5171

subject to alterations

Speed setting, 3-phase (with 5 steps)

for wall assembly

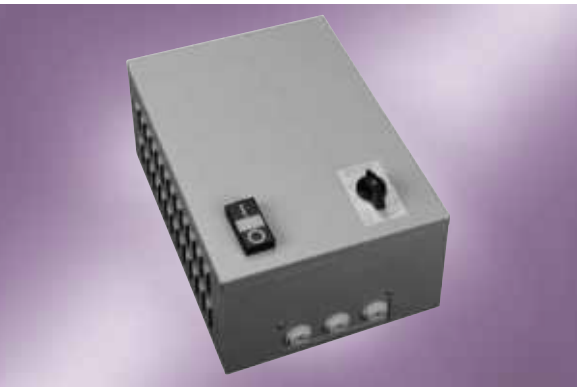

- **Technical features:** Input for TOP
- **Voltage steps:** 3~ 400 / 280 / 230 / 180 / 140 VAC
- **Type of protection:** IP 20 (with vertical installation)

Nominal data		Nominal voltage	Frequency	Current draw	Mass
Type		**VAC**	**Hz**	**A**	**kg**
TCD 020-AA01 -05	3~	400	50/60	2.0	9.5
TCD 040-AA01 -05	3~	400	50/60	4.0	13.9
TCD 070-AA01 -05	3~	400	50/60	7.0	19.7

subject to alterations

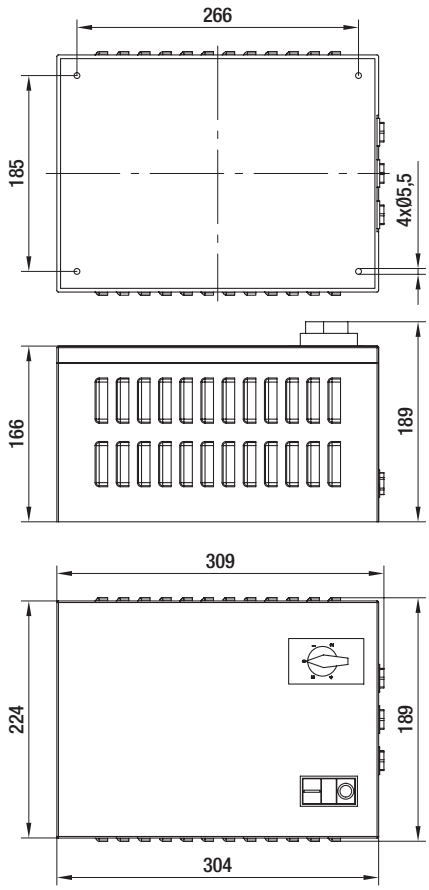

ebmpapst

Speed setting, single-phase (with 5 steps)

for wall assembly

- **Technical features:** Input for TOP
- **Voltage steps:** 1~ 230 / 160 / 145 / 130 / 105 VAC
- **Type of protection:** IP 40

Nominal data		Nominal voltage	Frequency	Current draw	Mass
Type		**VAC**	**Hz**	**A**	**kg**
TCE 021-AA01 -05	1~	230	50/60	2.1	3.6
TCE 040-AA01 -05	1~	230	50/60	4.0	4.8
TCE 075-AA01 -05	1~	230	50/60	7.5	6.5

subject to alterations

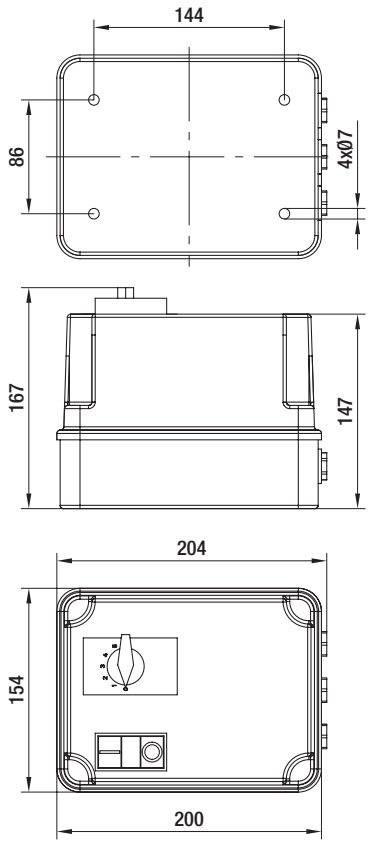

Motor protection switch, 3-phase

for assembly inside a cabinet

– **Technical features:** Input for TOP

Nominal data		Nominal voltage	Frequency	Current draw	Mass	
Type		**VAC**	**Hz**	**A**	**kg**	**Auxiliary contactor**
TPD 250-AB01 -01	3~	400	50/60	25.0	0.3	without auxiliary contactor
TPD 250-AB01 -02	3~	400	50/60	25.0	0.3	with break contact
TPD 250-AB01 -03	3~	400	50/60	25.0	0.3	with make contact

subject to alterations

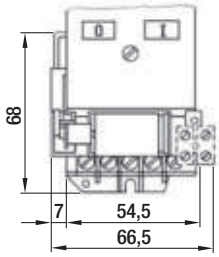

– **Electr. connection:**

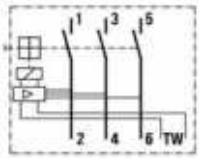

ebmpapst

Motor protection switch, single-phase

for assembly inside a cabinet

– **Technical features:** Input for TOP

Nominal data		Nominal voltage	Frequency	Current draw	Mass	
Type		**VAC**	**Hz**	**A**	**kg**	**Auxiliary contactor**
TPE 100-AB01 -01	3~	230	50/60	10.0	0.3	without auxiliary contactor
TPE 100-AB01 -02	3~	230	50/60	10.0	0.3	with break contact
TPE 100-AB01 -03	3~	230	50/60	10.0	0.3	with make contact

subject to alterations

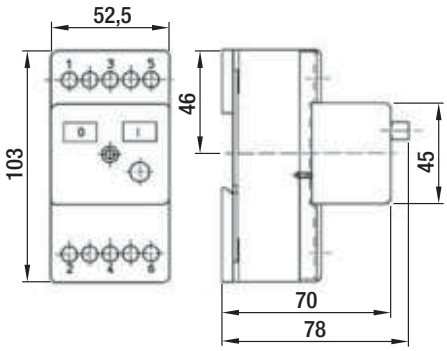

– **Electr. connection:**

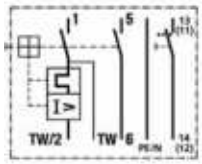

Motor-protection switch, single phase and three-phase

for wall assembly

- **Technical features:** Input for TOP
- **Type of protection:** IP 55

Nominal data		Nominal voltage	Frequency	Current draw	Mass	
Type		**VAC**	**Hz**	**A**	**kg**	**Auxiliary contactor**
TPD 250-AA01 -01	3~	400	50/60	25.0	0.6	without auxiliary contactor
TPD 250-AA01 -02	3~	400	50/60	25.0	0.6	with break contact
TPD 250-AA01 -03	3~	400	50/60	25.0	0.6	with make contact
TPE 100-AA01 -01	1~	230	50/60	10.0	0.6	without auxiliary contactor
TPE 100-AA01 -02	1~	230	50/60	10.0	0.6	with break contact
TPE 100-AA01 -03	1~	230	50/60	10.0	0.6	with make contact

subject to alterations

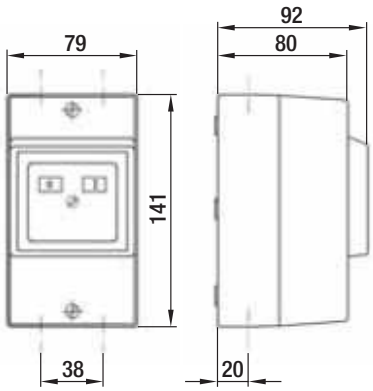

- **Electr. connection, three-phase:**

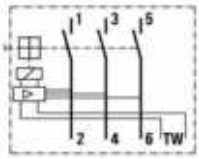

- **Electr. connection, single-phase:**

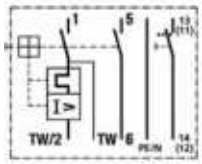

ebmpapst

Star-delta switch / repair switch

Third-party accessories from Möller Electric GmbH

for wall installation

More information: www.moeller.net

Star-delta switch (available from Möller Electric GmbH)

Designation	Installation
T0-4-8410/I1	Wall installation
T0-4-8410/E	Cabinet installation

subject to alterations

for wall installation

More information: www.moeller.net

Repair switch, lockable (available from Möller Electric GmbH)

Designation	Installation
T0-2-8900/I1/SVB-SW	Wall installation
T0-2-8900/EA/SVB-SW	Cabinet installation
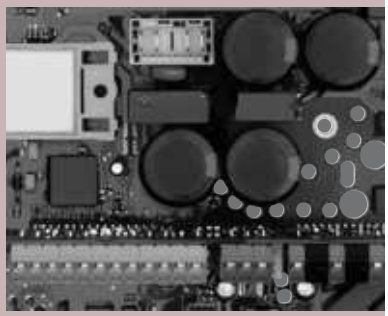
subject to alterations