Arm® Cortex®-M

32-bit Microcontroller

NuMicro® Family
M031/M032 Series
Datasheet

The information described in this document is the exclusive intellectual property of Nuvoton Technology Corporation and shall not be reproduced without permission from Nuvoton.

Nuvoton is providing this document only for reference purposes of NuMicro® microcontroller based system design. Nuvoton assumes no responsibility for errors or omissions.

All data and specifications are subject to change without notice.

For additional information or questions, please contact: Nuvoton Technology Corporation.

www.nuvoton.com

TABLE OF CONTENTS

1 GENERAL DESCRIPTION 13
2 FEATURES 14
2.1 M031/M032 Features 14
3 PARTS INFORMATION 22
3.1 Package Type 22
3.2 M031/M032 Series Selection Guide 23
3.2.1 M031 Base Series (M031Fx / M031Ex / M031Tx) 23
3.2.2 M031 Base Series (M031Lx) 24
3.2.3 M031 Base Series (M031Sx) 25
3.2.4 M031 Base Series (M031Kx) 26
3.2.5 M032 USB Series (M032Fx / M032Ex / M032Tx) 27
3.2.6 M032 USB Series (M032Lx) 28
3.2.7 M032 USB Series (M032Sx) 29
3.2.8 M032 USB Series (M032Kx) 30
3.2.9 Naming Rule 31
3.3 M031/M032 Series Feature Comparison Table 32
4 PIN CONFIGURATION 33
4.1 Pin Configuration 33
4.1.1 M031 Series Pin Diagram 33
4.1.2 M031 Series Multi-function Pin Diagram 39
4.1.3 M032 Series Pin Diagram 101
4.1.4 M032 Series Multi-function Pin Diagram 107
4.2 Pin Mapping 156
4.3 Pin Function Description 161
5 BLOCK DIAGRAM 167
6 FUNCTIONAL DESCRIPTION 168
6.1 Arm® Cortex®-M0 Core 168
6.2 Clock Controller 170
6.2.1 Overview 170
6.2.2 Clock Generator 172
6.2.3 System Clock and SysTick Clock 174
6.2.4 Peripherals Clock 176
6.2.5 Power-down Mode Clock 176
6.2.6 Clock Output 177
6.2.7 USB Clock Source 177
6.3 System Manager 179
6.3.1 Overview 179

6.3.2 System Reset 179
6.3.3 System Power Distribution 185
6.3.4 Power Modes and Wake-up Sources 185
6.3.5 System Memory Map 189
6.3.6 SRAM Memory Organization 191
6.3.7 SRAM Memory Organization with parity function 191
6.3.8 Chip Bus Matrix 193
6.3.9 IRC Auto Trim 193
6.3.10 Register Lock Control 194
6.3.11 UART0_TXD/USCI0_DAT0 modulation with PWM 194
6.3.12 System Timer (SysTick) 195
6.3.13 Nested Vectored Interrupt Controller (NVIC) 196
6.4 Flash Memory Controller (FMC) 199
6.4.1 Overview 199
6.5 General Purpose I/O (GPIO) 200
6.5.1 Overview 200
6.5.2 Features 200
6.6 PDMA Controller (PDMA) 201
6.6.1 Overview 201
6.6.2 Features 201
6.7 Timer Controller (TMR) 202
6.7.1 Overview 202
6.7.2 Features 202
6.8 Watchdog Timer (WDT) 203
6.8.1 Overview 203
6.8.2 Features 203
6.9 Window Watchdog Timer (WWDT) 204
6.9.1 Overview 204
6.9.2 Features 204
6.10 Real Time Clock (RTC) 205
6.10.1 Overview 205
6.10.2 Features 205
6.11 Basic PWM Generator and Capture Timer (BPWM) 206
6.11.1 Overview 206
6.11.2 Features 206
6.12 PWM Generator and Capture Timer (PWM) 207
6.12.1 Overview 207
6.12.2 Features 207
6.13 UART Interface Controller (UART) 209
6.13.1 Overview 209

6.13.2 Features 209
6.14 Serial Peripheral Interface (SPI) 211
6.14.1 Overview 211
6.14.2 Features 211
6.15 Quad Serial Peripheral Interface (QSPI) 212
6.15.1 Overview 212
6.15.2 Features 212
6.16 I^2C Serial Interface Controller (I^2C) 213
6.16.1 Overview 213
6.16.2 Features 213
6.17 USCI - Universal Serial Control Interface Controller (USCI) 215
6.17.1 Overview 215
6.17.2 Features 215
6.18 USCI – UART Mode 216
6.18.1 Overview 216
6.18.2 Features 216
6.19 USCI - SPI Mode 217
6.19.1 Overview 217
6.19.2 Features 217
6.20 USCI - I^2C Mode 219
6.20.1 Overview 219
6.20.2 Features 219
6.21 External Bus Interface (EBI) 220
6.21.1 Overview 220
6.21.2 Features 220
6.22 USB 2.0 Full-Speed Device Controller (USBD) 221
6.22.1 Overview 221
6.22.2 Features 221
6.23 CRC Controller (CRC) 222
6.23.1 Overview 222
6.23.2 Features 222
6.24 Hardware Divider (HDIV) 223
6.24.1 Overview 223
6.24.2 Features 223
6.25 Analog-to-Digital Converter (ADC) 224
6.25.1 Overview 224
6.25.2 Features 224
6.26 Analog Comparator Controller (ACMP) 226
6.26.1 Overview 226

6.26.2 Features 226
6.27 Peripherals Interconnection 227
6.27.1 Overview 227
6.27.2 Peripherals Interconnect Matrix table 227
7 APPLICATION CIRCUIT 228
7.1 Power Supply Scheme 228
7.2 Peripheral Application Scheme 229
8 ELECTRICAL CHARACTERISTICS 230
8.1 Absolute Maximum Ratings 230
8.1.1 Voltage Characteristics 230
8.1.2 Current Characteristics 230
8.1.3 Thermal Characteristics 232
8.1.4 EMC Characteristics 233
8.1.5 Package Moisture Sensitivity(MSL) 234
8.1.6 Soldering Profile 235
8.2 General Operating Conditions 236
8.3 DC Electrical Characteristics 237
8.3.1 Supply Current Characteristics for M03xB/M03xC/M03xD/M03xE 237
8.3.2 Supply Current Characteristics for M03xG/M03xI 240
8.3.3 On-Chip Peripheral Current Consumption 243
8.3.4 Wakeup Time from Low-Power Modes 245
8.3.5 I/O Current Injection Characteristics 246
8.3.6 I/O DC Characteristics 246
8.4 AC Electrical Characteristics 248
8.4.1 48 MHz Internal High Speed RC Oscillator (HIRC) 248
8.4.2 38.4 kHz Internal Low Speed RC Oscillator (LIRC) 251
8.4.3 External 4~32 MHz High Speed Crystal/Ceramic Resonator (HXT) characteristics 254
8.4.4 External 4~32 MHz High Speed Clock Input Signal Characteristics 256
8.4.5 External 32.768 kHz Low Speed Crystal/Ceramic Resonator (LXT) characteristics 257
8.4.6 External 32.768 kHz Low Speed Clock Input Signal Characteristics 258
8.4.7 PLL Characteristics 259
8.4.8 I/O AC Characteristics 260
8.5 Analog Characteristics 261
8.5.1 LDO 261
8.5.2 Reset and Power Control Block Characteristics 261
8.5.3 12-bit SAR ADC 263
8.5.4 Analog Comparator Controller (ACMP) 266
8.6 Communications Characteristics 267

8.6.1 QSPI/SPI Dynamic Characteristics 267
8.6.2 SPI - I^2S Dynamic Characteristics 270
8.6.3 I^2C Dynamic Characteristics 272
8.6.4 USCI - SPI Dynamic Characteristics 273
8.6.5 USCI - I^2C Dynamic Characteristics 276
8.6.6 USB Characteristics 277
8.7 Flash DC Electrical Characteristics 278
9 PACKAGE DIMENSIONS 279
9.1 TSSOP 20 (4.4x6.5x0.9 mm) 279
9.2 TSSOP 28 (4.4x9.7x1.0 mm) 280
9.3 QFN 33L (4X4x0.8 mm Pitch:0.40 mm) 281
9.4 LQFP 48L (7x7x1.4 mm Footprint 2.0mm) 282
9.5 LQFP 64L (7x7x1.4 mm Footprint 2.0 mm) 283
9.6 LQFP 128L (14x14x1.4 mm Footprint 2.0 mm) 284
10 ABBREVIATIONS 285
10.1 Abbreviations 285
11 REVISION HISTORY 287

LIST OF FIGURES

Figure 4.1-1 M031 Series TSSOP 20-pin Diagram 33
Figure 4.1-2 M031 Series TSSOP 28-pin Diagram 34
Figure 4.1-3 M031 Series QFN 33-pin Diagram 35
Figure 4.1-4 M031 Series LQFP 48-pin Diagram 36
Figure 4.1-5 M031 Series LQFP 64-pin Diagram 37
Figure 4.1-6 M031 Series LQFP 128-pin Diagram 38
Figure 4.1-7 M031FB0AE Multi-function Pin Diagram 39
Figure 4.1-8 M031FC1AE Multi-function Pin Diagram 40
Figure 4.1-9 M031EB0AE Multi-function Pin Diagram 41
Figure 4.1-10 M031EC1AE Multi-function Pin Diagram 42
Figure 4.1-11 M031TB0AE Multi-function Pin Diagram 44
Figure 4.1-12 M031TC1AE Multi-function Pin Diagram 46
Figure 4.1-13 M031TD2AE Multi-function Pin Diagram 48
Figure 4.1-14 M031TE3AE Multi-function Pin Diagram 50
Figure 4.1-15 M031LC2AE Multi-function Pin Diagram 52
Figure 4.1-16 M031LD2AE Multi-function Pin Diagram 55
Figure 4.1-17 M031LE3AE Multi-function Pin Diagram 58
Figure 4.1-18 M031LG6AE Multi-function Pin Diagram 61
Figure 4.1-19 M031LG8AE Multi-function Pin Diagram 64
Figure 4.1-20 M031SC2AE Multi-function Pin Diagram 67
Figure 4.1-21 M031SD2AE Multi-function Pin Diagram 70
Figure 4.1-22 M031SE3AE Multi-function Pin Diagram 73
Figure 4.1-23 M031SG6AE Multi-function Pin Diagram 76
Figure 4.1-24 M031SG8AE Multi-function Pin Diagram 79
Figure 4.1-25 M031SIAAE Multi-function Pin Diagram 82
Figure 4.1-26 M031KG6AE Multi-function Pin Diagram 86
Figure 4.1-27 M031KG8AE Multi-function Pin Diagram 91
Figure 4.1-28 M031KIAAE Multi-function Pin Diagram 96
Figure 4.1-29 M032 Series TSSOP 20-pin Diagram 101
Figure 4.1-30 M032 Series TSSOP 28-pin Diagram 102
Figure 4.1-31 M032 Series QFN 33-pin Diagram 103
Figure 4.1-32 M032 Series LQFP 48-pin Diagram 104
Figure 4.1-33 M032 Series LQFP 64-pin Diagram 105
Figure 4.1-34 M032 Series LQFP 128-pin Diagram 106
Figure 4.1-35 M032FC1AE Multi-function Pin Diagram 107
Figure 4.1-36 M032EC1AE Multi-function Pin Diagram 108

Figure 4.1-37 M032TC1AE Multi-function Pin Diagram 110
Figure 4.1-38 M032TD2AE Multi-function Pin Diagram 112
Figure 4.1-39 M032LC2AE Multi-function Pin Diagram 114
Figure 4.1-40 M032LD2AE Multi-function Pin Diagram 117
Figure 4.1-41 M032LE3AE Multi-function Pin Diagram 120
Figure 4.1-42 M032LG6AE Multi-function Pin Diagram 123
Figure 4.1-43 M032LG8AE Multi-function Pin Diagram 126
Figure 4.1-44 M032SE3AE Multi-function Pin Diagram 129
Figure 4.1-45 M032SG6AE Multi-function Pin Diagram 132
Figure 4.1-46 M032SG8AE Multi-function Pin Diagram 135
Figure 4.1-47 M032SIAAE Multi-function Pin Diagram 138
Figure 4.1-48 M032KG6AE Multi-function Pin Diagram 141
Figure 4.1-49 M032KG8AE Multi-function Pin Diagram 146
Figure 4.1-50 M032KIAAE Multi-function Pin Diagram 151
Figure 5-1 NuMicro® M031/M032 Block Diagram 167
Figure 6-1 Functional Block Diagram 168
Figure 6.2-1 Clock Generator Global View Diagram (1/2) 171
Figure 6.2-2 Clock Generator Global View Diagram (2/2) 172
Figure 6.2-3 Clock Generator Block Diagram 173
Figure 6.2-4 System Clock Block Diagram 174
Figure 6.2-5 HXT Stop Protect Procedure 175
Figure 6.2-6 LXT Stop Protect Procedure 176
Figure 6.2-7 SysTick Clock Control Block Diagram 176
Figure 6.2-8 Clock Output Block Diagram 177
Figure 6.2-9 USBD Clock Source 178
Figure 6.3-1 System Reset Sources 180
Figure 6.3-2 nRESET Reset Waveform 182
Figure 6.3-3 Power-on Reset (POR) Waveform 182
Figure 6.3-4 Low Voltage Reset (LVR) Waveform 183
Figure 6.3-5 Brown-out Detector (BOD) Waveform 184
Figure 6.3-6 NuMicro® M031 Power Distribution Diagram 185
Figure 6.3-7 Power Mode State Machine 187
Figure 6.3-8 SRAM Memory Organization 191
Figure 6.3-9 NuMicro® M031 Bus Matrix Diagram 193
Figure 6.19-1 SPI Master Mode Application Block Diagram 217
Figure 6.19-2 SPI Slave Mode Application Block Diagram 217
Figure 6.20-1 I^2C Bus Timing 219

Figure 8.1-1 Soldering Profile from J-STD-020C 235
Figure 8.4-1 HIRC vs. Temperature 250
Figure 8.4-2 LIRC vs. Temperature 253
Figure 8.4-2 Typical Crystal Application Circuit 255
Figure 8.4-3 Typical 32.768 kHz Crystal Application Circuit 257
Figure 8.5-1 Power Ramp Up/Down Condition 262
Figure 8.6-1 QSPI/SPI Master Mode Timing Diagram 267
Figure 8.6-2 QSPI/SPI Slave Mode Timing Diagram 269
Figure 8.6-3 I^2S Master Mode Timing Diagram 270
Figure 8.6-4 I^2S Slave Mode Timing Diagram 271
Figure 8.6-5 I^2C Timing Diagram 272
Figure 8.6-6 USCI-SPI Master Mode Timing Diagram 273
Figure 8.6-7 USCI-SPI Slave Mode Timing Diagram 275
Figure 8.6-8 USCI-I^2C Timing Diagram 276

List of Tables

Table 1-1 NuMicro® M031/M032 Series Key Features Support Table 13
Table 4.1-1 M031FB0AE Multi-function Pin Table 39
Table 4.1-2 M031FC1AE Multi-function Pin Table 40
Table 4.1-3 M031EB0AE Multi-function Pin Table 42
Table 4.1-4 M031EC1AE Multi-function Pin Table 43
Table 4.1-5 M031TB0AE Multi-function Pin Table 45
Table 4.1-6 M031TC1AE Multi-function Pin Table 47
Table 4.1-7 M031TD2AE Multi-function Pin Table 49
Table 4.1-8 M031TE3AE Multi-function Pin Table 51
Table 4.1-9 M031LC2AE Multi-function Pin Table 54
Table 4.1-10 M031LD2AE Multi-function Pin Table 57
Table 4.1-11 M031LE3AE Multi-function Pin Table 60
Table 4.1-12 M031LG6AE Multi-function Pin Table 63
Table 4.1-13 M031LG8AE Multi-function Pin Table 66
Table 4.1-14 M031SC2AE Multi-function Pin Table 69
Table 4.1-15 M031SD2AE Multi-function Pin Table 72
Table 4.1-16 M031SE3AE Multi-function Pin Table 75
Table 4.1-17 M031SG6AE Multi-function Pin Table 78
Table 4.1-18 M031SG8AE Multi-function Pin Table 81
Table 4.1-19 M031SIAAE Multi-function Pin Table 84
Table 4.1-20 M031KG6AE Multi-function Pin Table 90
Table 4.1-21 M031KG8AE Multi-function Pin Table 95
Table 4.1-22 M031KIAAE Multi-function Pin Table 100
Table 4.1-23 M032FC1AE Multi-function Pin Table 107
Table 4.1-24 M032EC1AE Multi-function Pin Table 109
Table 4.1-25 M032TC1AE Multi-function Pin Table 111
Table 4.1-26 M032TD2AE Multi-function Pin Table 113
Table 4.1-27 M032LC2AE Multi-function Pin Table 116
Table 4.1-28 M032LD2AE Multi-function Pin Table 119
Table 4.1-29 M032LE3AE Multi-function Pin Table 122
Table 4.1-30 M032LG6AE Multi-function Pin Table 125
Table 4.1-31 M032LG8AE Multi-function Pin Table 128
Table 4.1-32 M032SE2AE Multi-function Pin Table 131
Table 4.1-33 M032SG6AE Multi-function Pin Table 134
Table 4.1-34 M032SG8AE Multi-function Pin Table 137
Table 4.1-35 M032SIAAE Multi-function Pin Table 140

Table 4.1-36 M032KG6AE Multi-function Pin Table 145
Table 4.1-37 M032KG8AE Multi-function Pin Table 150
Table 4.1-38 M032KIAAE Multi-function Pin Table 155
Table 6.3-1 Reset Value of Registers 182
Table 6.3-2 Power Mode Table 186
Table 6.3-3 Power Mode Difference Table 186
Table 6.3-4 Power Mode Difference Table 186
Table 6.3-5 Clocks in Power Modes 188
Table 6.3-6 Condition of Entering Power-down Mode Again 189
Table 6.3-7 Address Space Assignments for On-Chip Controllers 190
Table 6.3-8 Exception Model 197
Table 6.3-9 Interrupt Number Table 198
Table 6.13-1 NuMicro® M031/M032 Series UART Features 210
Table 6.16-1 I^2C Feature Comparison Table at Different Chip 214
Table 6.21-1 EBI Features Comparison Table 220
Table 6.25-1 ADC Features Comparison Table 225
Table 6.26-1 Calibration Function Features Comparison Table at Different Chip 226
Table 6.27-1 Peripherals Interconnect Matrix table 227
Table 8.1-1 Voltage Characteristics 230
Table 8.1-2 Current Characteristics 231
Table 8.1-3 Thermal Characteristics 232
Table 8.1-4 EMC Characteristics for M03xB/M03xC/M03xD/M03xE 233
Table 8.1-5 EMC Characteristics for M03xG/M03xI 234
Table 8.1-6 Package Moisture Sensitivity (MSL) 234
Table 8.1-7 Soldering Profile 235
Table 8.2-1 General Operating Conditions 236
Table 8.3-1 Current Consumption in Normal Run Mode 237
Table 8.3-2 Current Consumption in Idle Mode 238
Table 8.3-3 Chip Current Consumption in Power-down Mode 239
Table 8.3-4 Current Consumption in Normal Run Mode 240
Table 8.3-5 Current Consumption in Idle Mode 241
Table 8.3-6 Chip Current Consumption in Power-down Mode 242
Table 8.3-7 Peripheral Current Consumption 244
Table 8.3-8 Low-power Mode Wakeup Timings 245
Table 8.3-9 I/O Current Injection Characteristics 246
Table 8.3-10 I/O Input Characteristics 246
Table 8.3-11 I/O Output Characteristics 247

Table 8.3-12 nRESET Input Characteristics 247
Table 8.4-1 48 MHz Internal High Speed RC Oscillator(HIRC) Characteristics 248
Table 8.4-2 38.4 kHz Internal Low Speed RC Oscillator(LIRC) characteristics 251
Table 8.4-3 External 4~32 MHz High Speed Crystal (HXT) Oscillator 254
Table 8.4-4 External 4~32 MHz High Speed Crystal Characteristics 255
Table 8.4-5 External 4~32 MHz High Speed Clock Input Signal 256
Table 8.4-6 External 32.768 kHz Low Speed Crystal (LXT) Oscillator 257
Table 8.4-7 External 32.768 kHz Low Speed Crystal Characteristics 257
Table 8.4-8 External 32.768 kHz Low Speed Clock Input Signal 258
Table 8.4-9 PLL Characteristics 259
Table 8.4-10 I/O AC Characteristics 260
Table 8.5-1 Reset and Power Control Unit 261
Table 8.5-2 ACMP Characteristics 266
Table 8.6-1 QSPI/SPI Master Mode Characteristics 267
Table 8.6-2 QSPI/SPI Slave Mode Characteristics 268
Table 8.6-3 I^2S Characteristics 270
Table 8.6-4 I^2C Characteristics 272
Table 8.6-5 USCI-SPI Master Mode Characteristics 273
Table 8.6-6 USCI-SPI Slave Mode Characteristics 274
Table 8.6-7 USCI-I^2C Characteristics 276
Table 8.6-8 USB Full-Speed Characteristics 277
Table 8.6-9 USB Full-Speed PHY Characteristics 277
Table 10.1-1 List of Abbreviations 286

1 GENERAL DESCRIPTION

The NuMicro® M031/M032 series 32-bit microcontroller is based on Arm® Cortex®-M0 core with 32-bit hardware multiplier/divider. It features 1.8 ~ 3.6 V operating voltage, 5 V I/O tolerant, and runs up to 48/72 MHz within -40°C ~105°C.

The M031/M032 series provides a solution for the applications that need 1.8 V low-voltage interface connection with enhanced fast 2 MSPS conversion rate 12-bit ADC, comparators and up-to 24-ch 96/144 MHz PWM control. It supports a fast and precise data conversion for the voltage, current, and sensor data, then fast response control to the external device. Additionally, the M031/M032 series also provides plenty of peripherals including Universal Serial Control Interface(USCI) that can be set as UART/SPI/I^2C flexibly, up to 10 sets of UART, 4 sets of SPI, 4 sets of I^2C, and 1-wire UART interface for data communication between master and slave devices.

The M031/M032 series provides Flash size from 16 Kbytes to 512 Kbytes, SRAM size from 2 Kbytes to 96 Kbytes. Supported packages from small form factor TSSOP 20-pin, TSSOP 28-pin, QFN 33-pin, LQFP 48-pin to LQFP 64-pin and LQFP 128-pin with pin-compatible for different part numbers makes the system design and parts change easily.

Part Numbers with the M032 series are all based on the M031 series and enhanced with the crystal-less USB 2.0 full-speed device feature for USB related applications.

For the development, Nuvoton provides the NuMaker-PFM evaluation board and Nuvoton Nu-Link debugger. The 3rd Party IDE such as Keil® MDK, IAR EWArm, Eclippse IDE with GNU GCC compilers are also supported.

Product Line	UART	I^2C	SPI/ I^2S	QSPI	USCI	Timer	PWM	RTC	PDMA	EBI	ADC	ACMP	Divider	USBD	IEC60730
M031/M032	8	2	1	1	2	4	24	1	9	1	16	2	1	√	√

Table 1-1 NuMicro® M031/M032 Series Key Features Support Table

The NuMicro® M031/M032 series is suitable for a wide range of applications such as:

- Laser Distance Meter
- Air Detector/Cleaner
- Mobile LCD Panel Controller
- IoT Sensing Device
- HMI Controller
- Micro Printer
- Gaming Keyboard and Mouse
- WPC Wireless Charger

2 FEATURES

2.1 M031/M032 Features

Core and System	
Arm® Cortex®-M0	• Arm® Cortex®-M0 processor, running up to 72 MHz – 72 MHz at 2.0V-3.6V – 48 MHz at 1.8V-3.6V • Built-in Nested Vectored Interrupt Controller (NVIC) • 24-bit system tick timer • Programmble and maskable interrupt • Low Power Sleep mode by WFI and WFE instructions
Brown-out Detector (BOD)	• Two-level BOD with brown-out interrupt and reset option. (2.5V/2.0V)
Low Voltage Reset (LVR)	• LVR with 1.7V threshold voltage level.
Security	• 96-bit Unique ID (UID). • 128-bit Unique Customer ID (UCID).
32-bit H/W Divider(HDIV)	• Signed (two's complement) integer calculation • 32-bit dividend with 16-bit divisor calculation capacity • 32-bit quotient and 32-bit remainder outputs (16-bit remainder with sign extends to 32-bit)
Memories	
Flash	• Dual bank 512 KB on-chip Application ROM (APROM) for Over-The-Air (OTA) upgrade. • Single bank up to 256 KB on-chip Application ROM (APROM). • Up to 8 KB on-chip Flash for user-defined loader (LDROM) • Up to 2048 bytes execution-only Security Protection ROM (SPROM) • All on-chip Flash support 512 bytes or 2048 bytes page erase • Fast Flash programming verification with CRC-32 checksum calculation • On-chip Flash programming with In-Chip Programming (ICP), In-System Programming (ISP) and In-Application Programming (IAP) capabilities • 2-wired ICP Flash updating through SWD/ICE interface
SRAM	• Up to 96 KB on-chip SRAM – 32 KB SRAM located in bank 0 that supports hardware parity check and retenion mode

	– 32/32 KB SRAM located in bank 1 and bank 2 • Byte-, half-word- and word-access • PDMA operation
Cyclic Redundancy Calculation (CRC)	• Supports CRC-CCITT, CRC-8, CRC-16 and CRC-32 polynomials • Programmable initial value and seed value • Programmable order reverse setting and one's complement setting for input data and CRC checksum • 8-bit, 16-bit, and 32-bit data width • 8-bit write mode with 1-AHB clock cycle operation • 16-bit write mode with 2-AHB clock cycle operation • 32-bit write mode with 4-AHB clock cycle operation • Uses DMA to write data with performing CRC operation
Peripheral DMA (PDMA)	• Up to 9 independent and configurable channels for automatic data transfer between memories and peripherals • Basic and Scatter-Gather transfer modes • Each channel supports circular buffer management using Scatter-Gather Transfer mode • Fixed-priority and Round-robin priorities modes • Single and burst transfer types • Byte-, half-word- and word tranfer unit with count up to 65536 • Incremental or fixed source and destination address
Clocks	
External Clock Source	• 4~32 MHz High-speed eXternal crystal oscillator (HXT) for precise timing operation • 32.768 kHz Low-speed eXternal crystal oscillator (LXT) for RTC function and low-power system operation • Supports clock failure detection for external crystal oscillators and exception generatation (NMI)
Internal Clock Source	• 48 MHz High-speed Internal RC oscillator (HIRC) dedicated for crystal-less USB. • 38.4 kHz Low-speed Internal RC oscillator (LIRC) for watchdog timer and wakeup operation • Up to 144 MHz on-chip PLL, sourced from HIRC or HXT, allows CPU operation up to the maximim CPU frequency without the need for a high-frequency crystal
Real-Time Clock (RTC)	• The RTC clock source includes Low-speed external crystal oscillator (LXT) • Able to wake up CPU from idle or power-down mode • Supports ±5ppm within 5 seconds software clock accuracy compensation

	• Supports Alarm registers (second, minute, hour, day, month, year) • Supports RTC Time Tick and Alarm Match interrupt • Automatic leap year recognition • Supports 1 Hz clock output for calibration
Timers	
32-bit Timer	• Up to 4 sets of 32-bit timers with 24-bit up counter and one 8-bit pre-scale counter from independent clock source • One-shot, Periodic, Toggle and Continuous Counting operation modes • Supports event counting function to count the event from external pins • Supports external capture pin for interval measurement and resetting 24-bit up counter • Supports chip wake-up function, if a timer interrupt signal is generated
PWM (PWM)	• Up to two PWM modules, each module provides three 16-bit counter and 6 output channels. • Up to 12 independent input capture channels with 16-bit resolution counter • Supports dead time with maximum divided 12-bit prescale • Up, down or up-down PWM counter type • Supports complementary mode for 3 complementary paired PWM output channels • Counter synchronous start function • Brake function with auto recovery mechanism • Mask function and tri-state output for each PWM channel • Able to trigger ADC to start conversion
Basic PWM (BPWM)	• Two 16-bit counters with 12-bit clock prescale for twelve 144 MHz PWM output channels. • Up to 6 independent input capture channels with 16-bit resolution counter • Up, down or up-down PWM counter type • Counter synchronous start function • Mask function and tri-state output for each PWM channel • Able to trigger ADC to start conversion
Watchdog	• 20-bit free running up counter for WDT time-out interval • Supports multiple clock sources from LIRC (default selection), HCLK/2048 and LXT with 9 selectable time-out period • Able to wake up system from Power-down or Idle mode • Time-out event to trigger interrupt or reset system • Supports four WDT reset delay periods, including 1026, 130, 18 or

	3 WDT_CLK reset delay period • Configured to force WDT enabled on chip power-on or reset.
Window Watchdog	• Clock sourced from HCLK/2048 or LIRC; the window set by 6-bit counter with 11-bit prescale • Suspended in Idle/Power-down mode
Analog Interfaces	
ADC	• Analog input voltage range: 0 ~ AV_{DD} • One 12-bit, 2 MSPS SAR ADC with up to 16 single-ended input channels or 8 differential input pairs; 10-bit accuracy is guaranteed. • Internal channels for band-gap VBG input. • Supports external V_{REF} pin. • Supports calibration capability. • Four operation modes: Single mode, Burst mode, Single-cycle Scan mode and Continuous Scan mode. • Analog-to-Digital conversion can be triggered by software enable (ADST), external pin (STADC), Timer 0~3 overflow pulse trigger, PWM trigger or BPWM trigger. • Each conversion result is held in data register of each channel with valid and overrun indicators. • Supports conversion result monitor by compare mode function. • Configurable ADC external sampling time. • PDMA operation. • Supports floating detect function.
Analog Comparator (ACMP)	• Two Analog Comparators • Supports four multiplexed I/O pins at positive input • Supports I/O pins, band-gap, and 16-level Voltage divider from AV_{DD} or V_{REF} at negative input • Supports wake up from Power-down by interrupt • Supports triggers for brake events and cycle-by-cycle control for PWM • Supports window compare mode and window latch mode • Supports hysteresis function • Supports calibration function
Communication Interfaces	
Low-power UART	• Low-power UARTs with up to 7.2 MHz baud rate. • Auto-Baud Rate measurement and baud rate compensation function. • Supports low power UART (LPUART): baud rate clock from LXT (32.768 kHz) with 9600bps in Power-down mode even system clock

	is stopped. • 16-byte FIFOs with programmable level trigger • Auto flow control (nCTS and nRTS) • Supports IrDA (SIR) function • Supports RS-485 9-bit mode and direction control • Supports nCTS, incoming data, Received Data FIFO reached threshold and RS-485 Address Match (AAD mode) wake-up function in idle mode. • Supports hardware or software enables to program nRTS pin to control RS-485 transmission direction • Supports wake-up function • 8-bit receiver FIFO time-out detection function • Supports break error, frame error, parity error and receive/transmit FIFO overflow detection function • PDMA operation. • Supports Single-wire function mode.
I^2C	• Three sets of I^2C devices with Master/Slave mode. • Supports Standard mode (100 kbps), Fast mode (400 kbps), Fast mode plus (1 Mbps) • Supports 7 bits mode • Programmable clocks allowing for versatile rate control • Supports multiple address recognition (four slave address with mask option) • Supports multi-address power-down wake-up function • PDMA operation • I^2C Port0 supports SMBus and PMBus
Quad SPI	• SPI Quad controller with Master/Slave mode. • Up to 24 MHz in Master mode and up to 16 MHz in Slave mode at 1.8V~3.6V system voltage. • Supports Dual and Quad I/O Transfer mode. • Supports one data channel half-duplex transfer. • Supports receive-only mode. • Configurable bit length of a transfer word from 8 to 32-bit. • Provides separate 8-level depth transmit and receive FIFO buffers. • Supports MSB first or LSB first transfer sequence. • Supports the byte reorder function. • Supports Byte or Word Suspend mode. • Supports 3-wired, no slave select signal, bi-direction interface. • PDMA operation.

	• Supports 2-bit Transfer mode.
SPI/I^{2}S	• SPI/I^{2}S controllers with Master/Slave mode. **SPI** • Up to 24 MHz in Master mode and up to 16 MHz in Slave mode at 1.8V~3.6V system voltage. • Configurable bit length of a transfer word from 8 to 32-bit. • Provides separate 4-level of 32-bit (or 8-level of 16-bit) transmit and receive FIFO buffers. • MSB first or LSB first transfer sequence. • Byte reorder function. • Supports Byte or Word Suspend mode. • Supports one data channel half-duplex transfer. • Supports receive-only mode. • PDMA operation. **I^{2}S** • Supports mono and stereo audio data with 8-, 16-, 24- and 32-bit audio data sizes. • Provides separate 4-level depth transmit and receive FIFO buffers. • Supports PCM mode A, PCM mode B, I^{2}S and MSB justified data format. • PDMA operation. • Generates interrupt requests when buffer levels cross as programmable boundary
Universal Serial Control Interface (USCI)	• Two sets of USCI, configured as UART, SPI or I^{2}C function. • Supports single byte TX and RX buffer mode **UART** • Supports one transmit buffer and two receive buffers for data payload. • Supports hardware auto flow control function and programmable flow control trigger level. • 9-bit Data Transfer. • Baud rate detection by built-in capture event of baud rate generator. • Supports wake-up function. • PDMA operation. **SPI** • Supports Master or Slave mode operation. • Supports one transmit buffer and two receive buffer for data payload. • Configurable bit length of a transfer word from 4 to 16-bit. • Supports MSB first or LSB first transfer sequence. • Supports Word Suspend function.

	• Supports 3-wire, no slave select signal, bi-direction interface. • Supports wake-up function: input slave select transition. • PDMA operation. • Supports one data channel half-duplex transfer. **I²C** • Supports master and slave device capability. • Supports one transmit buffer and two receive buffer for data payload. • Communication in standard mode (100 kbps), fast mode (up to 400 kbps), and Fast mode plus (1 Mbps). • Supports 7-bit mode (10-bit mode not supported). • Supports 10-bit bus time out capability. • Supports bus monitor mode. • Supports power-down wake-up by data toggle or address match. • Supports multiple address recognition. • Supports device address flag. • Programmable setup/hold time.
External Bus Interface (EBI)	• Supports up to two memory banks with individual adjustment of timing parameter. • Each bank supports dedicated external chip select pin with polarity control and up to 1 MB addressing space. • 8-/16-bit data width. • Supports byte write in 16-bit data width mode. • Configurable idle cycle for different access condition: Idle of Write command finish (W2X) and Idle of Read-to-Read (R2R). • Supports Address/Data multiplexed mode. • Supports address bus and data bus separate mode. • Supports LCD interface i80 mode. • PDMA operation.
GPIO	• Supports four I/O modes: Quasi bi-direction, Push-Pull output, Open-Drain output and Input only with high impendence mode. • Configured as interrupt source with edge/level trigger setting. • I/O pin internal pull-up resistor enabled only in Quasi-bidirectional I/O mode. • Supports 5V-tolerance function except analog IO (PA.10, PA.11, PB.0~PB.15, PF.2~PF.5). • Enabling the pin interrupt function will also enable the wake-up function. • Input schmitt trigger function.
Advanced Connectivity	

USB 2.0 Full Speed with on-chip transceiver	• Compliant with USB Revision 2.0 Specification. • Supports suspend function when no bus activity existing for 3 ms. • 8 configurable endpoints for configurable Isochronous, Bulk, Interrupt and Control transfer types. • 512 bytes configurable RAM for endpoint buffer. • Remote wake-up capability. • Supports Crystal-less function • Start of Frame (SOF) locked clock pulse generation • USB 2.0 link power management.

3 PARTS INFORMATION

3.1 Package Type

Part No.	TSSOP20	TSSOP28	QFN33	LQFP48	LQFP64	LQFP128
M031xB	M031FB0AE	M031EB0AE	M031TB0AE			
M031xC	M031FC1AE	M031EC1AE	M031TC1AE	M031LC2AE	M031SC2AE	
M031xD			M031TD2AE	M031LD2AE	M031SD2AE	
M031xE			M031TE3AE	M031LE3AE	M031SE3AE	
M031xG				M031LG6AE M031LG8AE	M031SG6AE M031SG8AE	M031KG6AE M031KG8AE
M031xI					M031SIAAE	M031KIAAE
M032xC	M032FC1AE	M032EC1AE	M032TC1AE	M032LC2AE		
M032xD			M032TD2AE	M032LD2AE		
M032xE				M032LE3AE	M032SE3AE	
M032xG				M032LG6AE M032LG8AE	M032SG6AE M032SG8AE	M032KG6AE M032KG8AE
M032xI					M032SIAAE	M032KIAAE

3.2 M031/M032 Series Selection Guide

3.2.1 M031 Base Series (M031Fx / M031Ex / M031Tx)

Part Number		M031							
		FB0AE	FC1AE	EB0AE	EC1AE	TB0AE	TC1AE	TD2AE	TE3AE
Flash (KB)		16	32	16	32	16	32	64	128
SRAM (KB)		2	4	2	4	2	4	8	16
LDROM (KB)		2	2	2	2	2	2	2	4
SPROM (Bytes)		512							
System Frequency (MHz)		48							
PLL (MHz)		-	-	-	-	-	-	96	96
I/O		15	15	23	23	27	27	27	27
32-bit Timer		2	4	2	4	2	4	4	4
Connectivity	USCI	-	-	-	-	-	-	1	1
	UART	3							
	SPI/I²S	1							
	QSPI	-							
	I²C/SMBus	2/0							
	USB FS	-							
PWM		6	6	6	6	6	6	12	12
BPWM		-							
PDMA		-	2	-	2	-	2	5	5
EBI		-							
HDIV		√							
CRC		√							
IEC-60730		-							
HXT		√							
LXT		-	-	-	-	-	√	√	√
RTC		-							
Analog Comparator		-	-	-	-	-	-	2	2
12-bit SAR ADC		7	7	9	9	10	10	10	10
Package		TSSOP20	TSSOP20	TSSOP28	TSSOP28	QFN33	QFN33	QFN33	QFN33

3.2.2 M031 Base Series (M031Lx)

Part Number		M031				
		LC2AE	LD2AE	LE3AE	LG6AE	LG8AE
Flash (KB)		32	64	128	256	256
SRAM (KB)		8	8	16	32	64
LDROM (KB)		2	2	4	4	4
SPROM (Bytes)		512	512	512	2048	2048
System Frequency (MHz)		48	48	48	72	72
PLL (MHz)		96	96	96	144	144
I/O		42				
32-bit Timer		4				
Connectivity	USCI	1	1	1	2	2
	UART	3	3	3	6	6
	SPI/I^2S	1				
	QSPI	-	-	-	1	1
	I^2C/SMBus	2/0	2/0	2/0	2/1	2/1
	USB FS	-	-	-	-	-
PWM		12				
BPWM		-	-	-	12	12
PDMA		5	5	5	7	7
EBI		-	-	√	√	√
CRC		√				
HDIV		√				
IEC-60730		-	-	-	√	√
HXT		√				
LXT		√				
RTC		-	-	-	√	√
Analog Comparator		2				
12-bit SAR ADC		12				
Package		LQFP48				

3.2.3 M031 Base Series (M031Sx)

Part Number		M031					
		SC2AE	SD2AE	SE3AE	SG6AE	SG8AE	SIAAE
Flash (KB)		32	64	128	256	256	512
SRAM (KB)		8	8	16	32	64	96
LDROM (KB)		2	2	4	4	4	8
SPROM (Bytes)		512	512	512	2048	2048	2048
System Frequency (MHz)		48	48	48	72	72	72
PLL (MHz)		96	96	96	144	144	144
I/O		55					
32-bit Timer		4					
Connectivity	USCI	1	1	1	2	2	2
	UART	3	3	3	6	6	8
	SPI/I^2S	1					
	QSPI	-	-	-	1	1	1
	I^2C/SMBus	2/0	2/0	2/0	2/1	2/1	2/1
	USB FS	-					
PWM		12					
BPWM		-	-	-	12	12	12
PDMA		5	5	5	7	7	9
EBI		-	-	√	√	√	√
CRC		√					
HDIV		√					
IEC-60730		-	-	-	√	√	√
HXT		√					
LXT		√					
RTC		-	-	-	√	√	√
Analog Comparator		2					
12-bit SAR ADC		16					
Package		LQFP64					

3.2.4 M031 Base Series (M031Kx)

Part Number		M031		
		KG6AE	KG8AE	KIAAE
Flash (KB)		256	256	512
SRAM (KB)		32	64	96
LDROM (KB)		4	4	8
SPROM (Bytes)		2048		
System Frequency (MHz)		72		
PLL (MHz)		144		
I/O		111		
32-bit Timer		4		
Connectivity	USCI	2		
	UART	6	6	8
	SPI/I^2S	1		
	QSPI	1		
	I^2C/SMBus	2/1		
	USB FS	-		
PWM		12		
BPWM		12		
PDMA		7	7	9
EBI		√		
CRC		√		
HDIV		√		
IEC-60730		√		
HXT		√		
LXT		√		
RTC		√		
Analog Comparator		2		
12-bit SAR ADC		16		
Package		LQFP128		

3.2.5 M032 USB Series (M032Fx / M032Ex / M032Tx)

Part Number		M032			
		FC1AE	EC1AE	TC1AE	TD2AE
Flash (KB)		32	32	32	64
SRAM (KB)		4	4	4	8
LDROM (KB)		2			
SPROM (Bytes)		512			
System Frequency (MHz)		48			
PLL (MHz)		-			
I/O		11	19	23	23
32-bit Timer		2	2	2	4
Connectivity	USCI	1	1	1	2
	UART	1			
	SPI/I^2S	1			
	QSPI	-	-	-	1
	I^2C/SMBus	-			
	USB FS	√			
PWM		-			
BPWM		6	6	6	12
PDMA		-	-	-	5
EBI		-			
CRC		-			
HDIV		-	-	-	√
IEC-60730		-			
HXT		-			
LXT		-			
RTC		-			
Analog Comparator		-			
12-bit SAR ADC		3	9	10	10
Package		TSSOP20	TSSOP28	QFN33	QFN33

3.2.6 M032 USB Series (M032Lx)

Part Number		M032				
		LC2AE	LD2AE	LE3AE	LG6AE	LG8AE
Flash (KB)		32	64	128	256	256
SRAM (KB)		8	8	16	32	64
LDROM (KB)		2	2	4	4	4
SPROM (Bytes)		512	512	512	2048	2048
System Frequency (MHz)		48	48	48	72	72
PLL (MHz)		-	-	96	144	144
I/O		38				
32-bit Timer		4				
Connectivity	USCI	2	2	1	2	2
	UART	1	1	3	6	6
	SPI/I²S	1				
	QSPI	1	1	-	1	1
	I²C/SMBus	-	-	2/0	2/1	2/1
	USB FS	√				
PWM		-	-	12	12	12
BPWM		12	12	-	12	12
PDMA		5	5	5	7	7
EBI		-	-	√	√	√
CRC		-	-	√	√	√
HDIV		√				
IEC-60730		-	-	-	√	√
HXT		-	-	√	√	√
LXT		-	-	√	√	√
RTC		-	-	-	√	√
Analog Comparator		-	-	2	2	2
12-bit SAR ADC		12				
Package		LQFP48				

3.2.7 M032 USB Series (M032Sx)

Part Number		M032			
		SE3AE	SG6AE	SG8AE	SIAAE
Flash (KB)		128	256	256	512
SRAM (KB)		16	32	64	96
LDROM (KB)		4	4	4	8
SPROM (Bytes)		512	2048	2048	2048
System Frequency (MHz)		48	72	72	72
PLL (MHz)		96	144	144	144
I/O		51			
32-bit Timer		4			
Connectivity	USCI	1	2	2	2
	UART	3	6	6	8
	SPI/I^2S	1			
	QSPI	-	1	1	1
	I^2C/SMBus	2/0	2/1	2/1	2/1
	USB FS	√			
PWM		12			
BPWM		-	12	12	12
PDMA		5	7	7	9
EBI		√			
CRC		√			
HDIV		√			
IEC-60730		-	√	√	√
HXT		√			
LXT		√			
RTC		-	√	√	√
Analog Comparator		2			
12-bit SAR ADC		16			
Package		LQFP64			

3.2.8 M032 USB Series (M032Kx)

Part Number		M032		
		KG6AE	KG8AE	KIAAE
Flash (KB)		256	256	512
SRAM (KB)		32	64	96
LDROM (KB)		4	4	8
SPROM (Bytes)		2048		
System Frequency (MHz)		72		
PLL (MHz)		144		
I/O		107		
32-bit Timer		4		
Connectivity	USCI	2		
	UART	6	6	8
	SPI/I^2S	1		
	QSPI	1		
	I^2C/SMBus	2/1		
	USB FS	√		
PWM		12		
BPWM		12		
PDMA		7	7	9
EBI		√		
CRC		√		
HDIV		√		
IEC-60730		√		
HXT		√		
LXT		√		
RTC		√		
Analog Comparator		2		
12-bit SAR ADC		16		
Package		LQFP128		

3.2.9 Naming Rule

M0	32	K	I	A	A	E
Core	**Line**	**Package**	**Flash**	**SRAM**	**Reserve**	**Temperature**
Cortex®-M0	31: Base 32: USB	F: TSSOP20 (4.4x6.5 mm) E: TSSOP28 (4.4x9.7 mm) T: QFN33 (4x4 mm) L: LQFP48 (7x7 mm) S: LQFP64 (7x7 mm) K: LQFP128 (14x14 mm)	B: 16 KB C: 32 KB D: 64 KB E: 128 KB G: 256 KB I: 512 KB	0: 2 KB 1: 4 KB 2: 8/12 KB 3: 16 KB 6: 32 KB 8: 64 KB A: 96 KB		E:-40°C ~ 105°C

3.3 M031/M032 Series Feature Comparison Table

Section	Sub-section	-	M031xB/C/D/E	M031xG/I
		M032xC/D	M032xE	M032xG/I
System Manager	6.3.6 SRAM Memory Organization	●	●	-
	6.3.7 SRAM Memory Organization with parity function	-	-	●
FMC	6.4.4.3 Physical and Virtual Address Concept	-	-	●
	6.4.4.4 APROM Reboot Address Operation Model Selection	-	-	-/●
	6.4.4.14 Cache Memory Controller	-	-	●
	6.4.4.15 Embedded Flash Memory Programming 64-bit Programming and Multi-word Programming	-	-	●
	6.4.4.17 Flash All-One Verification	-	-	●
	ISP Control Register (FMC_ISPCTL) INTEN (FMC_ISPCTL[24])	-	●	
ADC	6.25.5.11 PWM trigger	-	●	●
	6.25.5.12 BPWM trigger	●	-	●
	6.25.5.17 Floating Detect Function	●	-	●
I^2C	6.16.5.2 Operation Modes - Bus Management (SMBus/PMBus Compatiable) - Device Identification – Slave Address - Bus Protocols - Address Resolution Protocol (ARP) - Received Command and Data acknowledge control - Host Notify Protocol - Bus Management Alert - Packet Error Checking - Time-out - Bus Management Time-out: - Bus Clock Low Time-out: - Bus Idle Detection	-	-	●
ACMP	6.26.5.7 Calibration function	-	-/-/-/●	●
EBI	6.21.5.3 EBI Data Width Connection - Address Bus and Data Bus Separate Mode	-	-	●
	6.21.5.4 EBI Operating Control - Continuous Data Access Mode	-	-	●
USBD	6.22.7 Register Description USB Configuration Register (USB_CFGx) DSQSYNC OUT Token Transaction	●	-	-

4 PIN CONFIGURATION

Users can find pin configuaration informations in chapter 4 or by using NuTool - PinConfig. The NuTool - PinConfigure contains all Nuvoton NuMicro® Family chip series with all part number, and helps users configure GPIO multi-function correctly and handily.

4.1 Pin Configuration

4.1.1 M031 Series Pin Diagram

4.1.1.1 M031 Series TSSOP 20-Pin Diagram

Corresponding Part Number: M031FB0AE, M031FC1AE

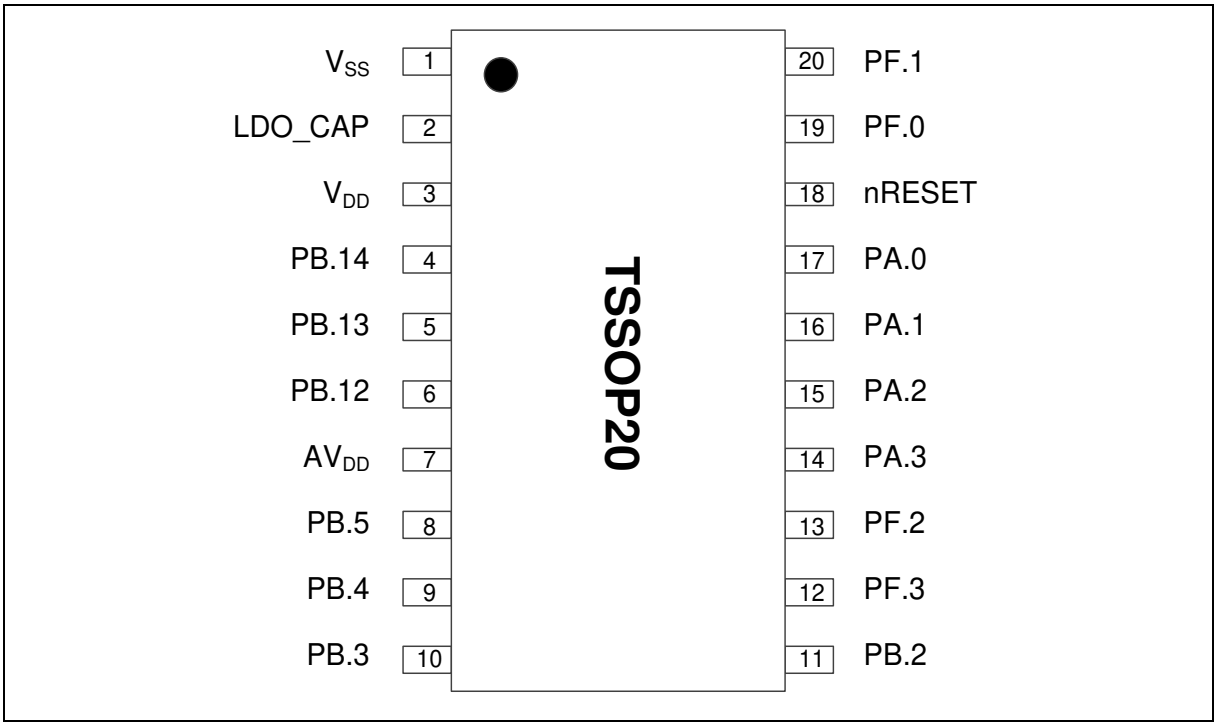

Figure 4.1-1 M031 Series TSSOP 20-pin Diagram

4.1.1.2 M031 Series TSSOP 28-Pin Diagram

Corresponding Part Number: M031EB0AE, M031EC1AE

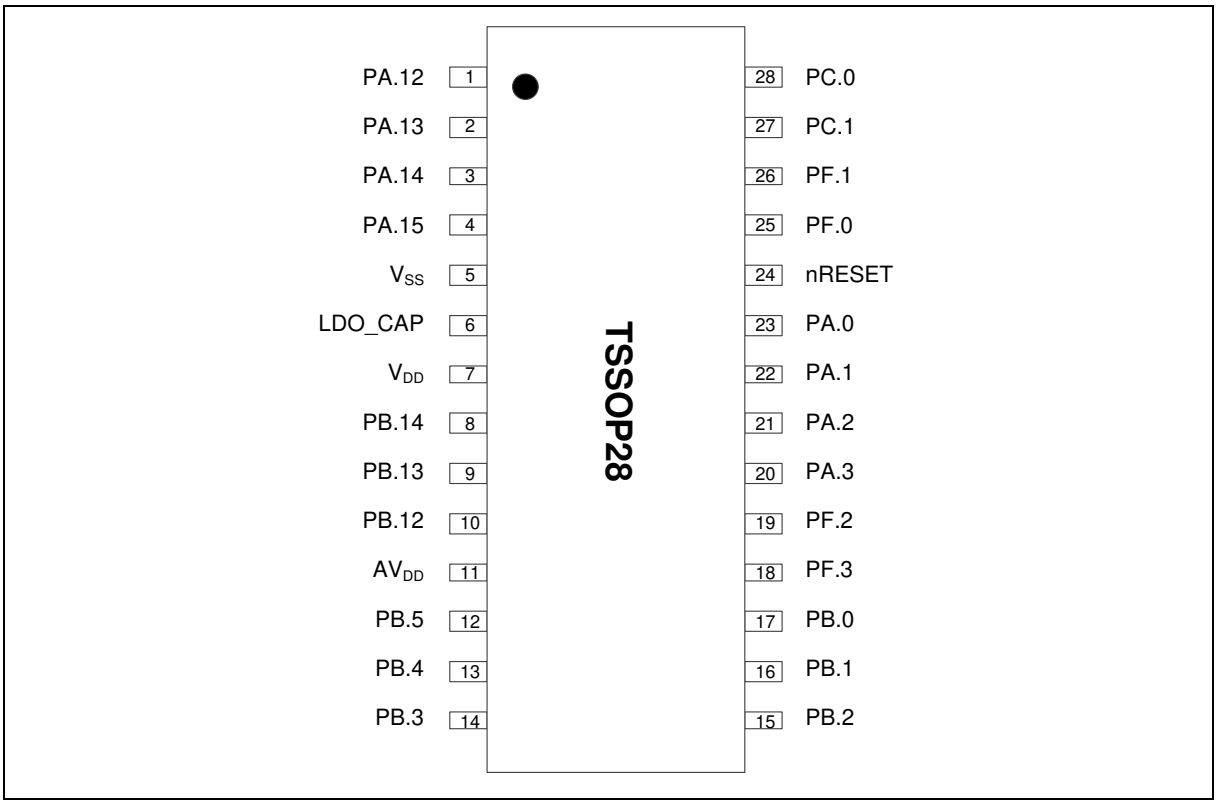

Figure 4.1-2 M031 Series TSSOP 28-pin Diagram

4.1.1.3 M031 Series QFN 33-Pin Diagram

Corresponding Part Number: M031TB0AE, M031TC1AE, M031TD2AE, M031TE3AE

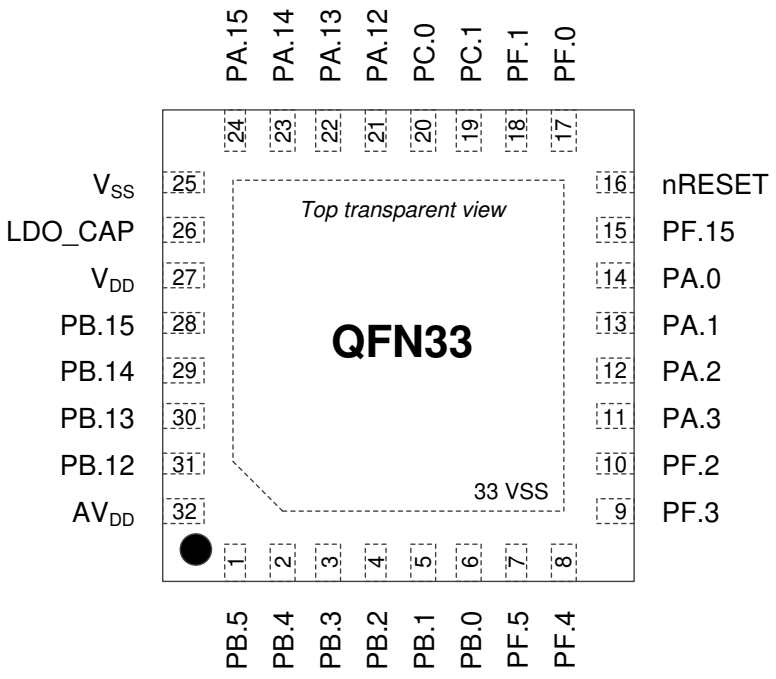

Figure 4.1-3 M031 Series QFN 33-pin Diagram

4.1.1.4 M031 Series LQFP 48-Pin Diagram

Corresponding Part Number: M031LC2AE, M031LD2AE, M031LE3AE, M031LG6AE, M031LG8AE

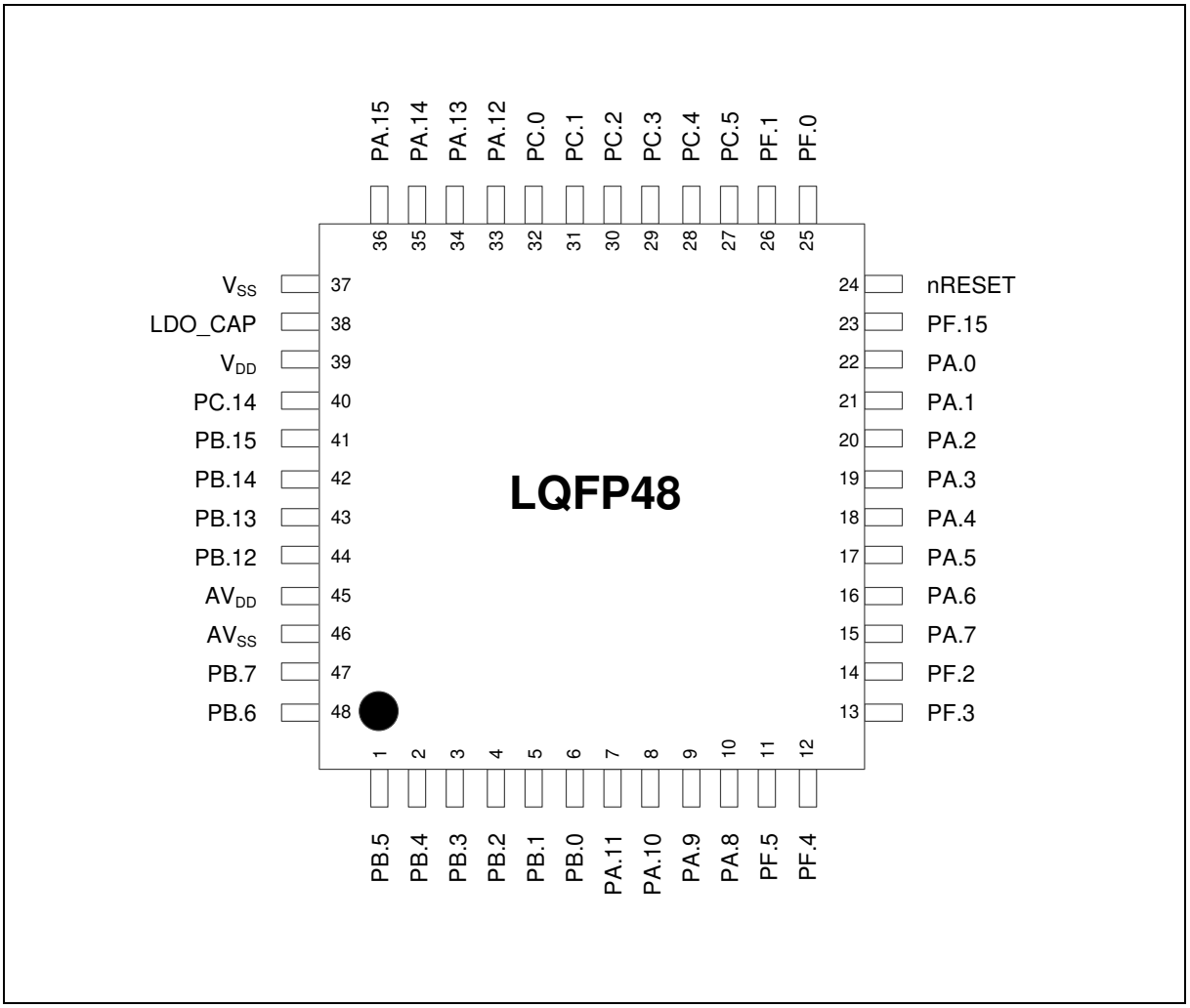

Figure 4.1-4 M031 Series LQFP 48-pin Diagram

4.1.1.5 M031 Series LQFP 64-Pin Diagram

Corresponding Part Number: M031SC2AE, M031SD2AE, M031SE3AE, M031SG6AE, M031SG8AE, M031SIAAE

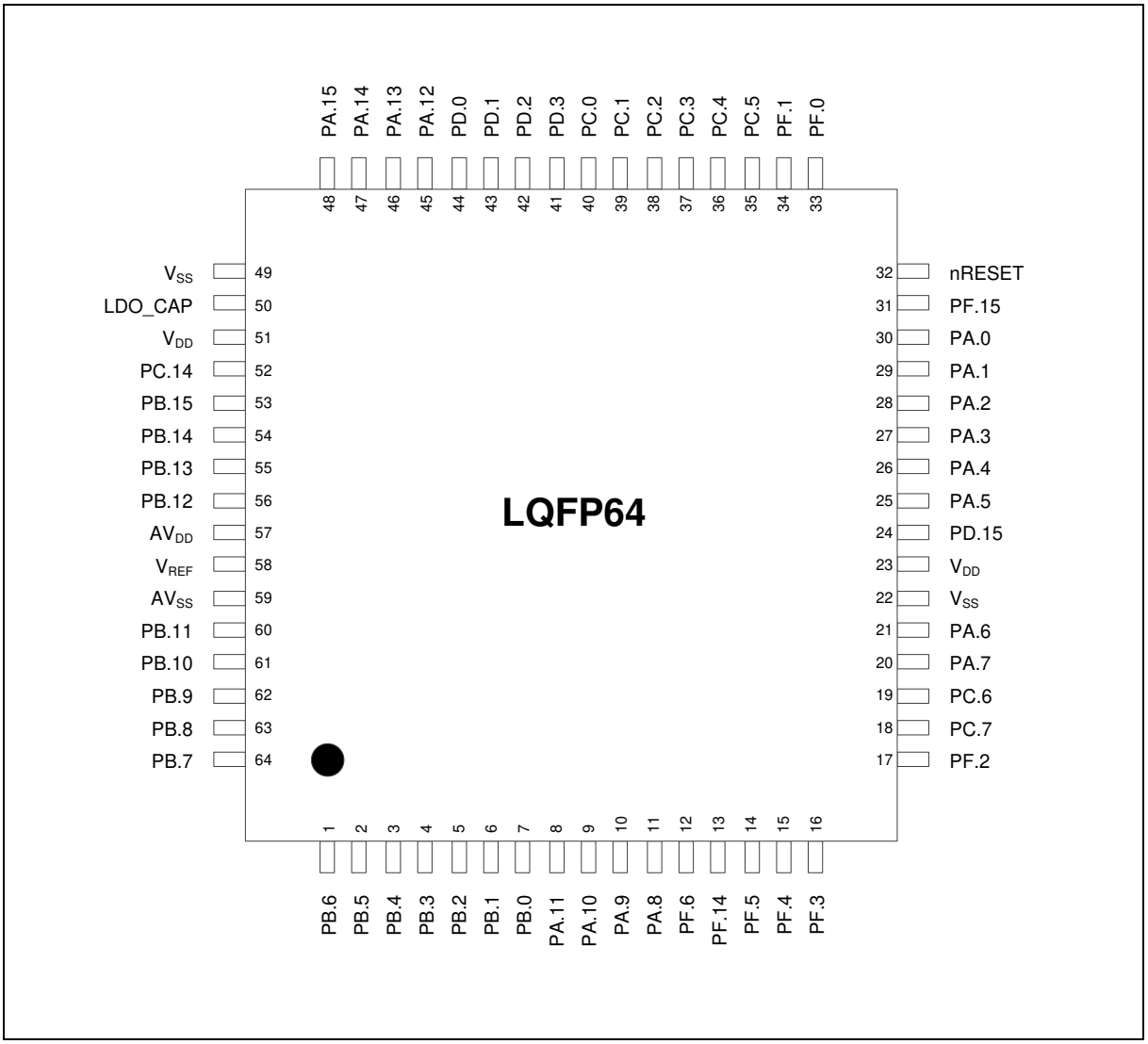

Figure 4.1-5 M031 Series LQFP 64-pin Diagram

4.1.1.6 M031 Series LQFP 128-Pin Diagram

Corresponding Part Number: M031KG6AE, M031KG8AE, M031KIAAE

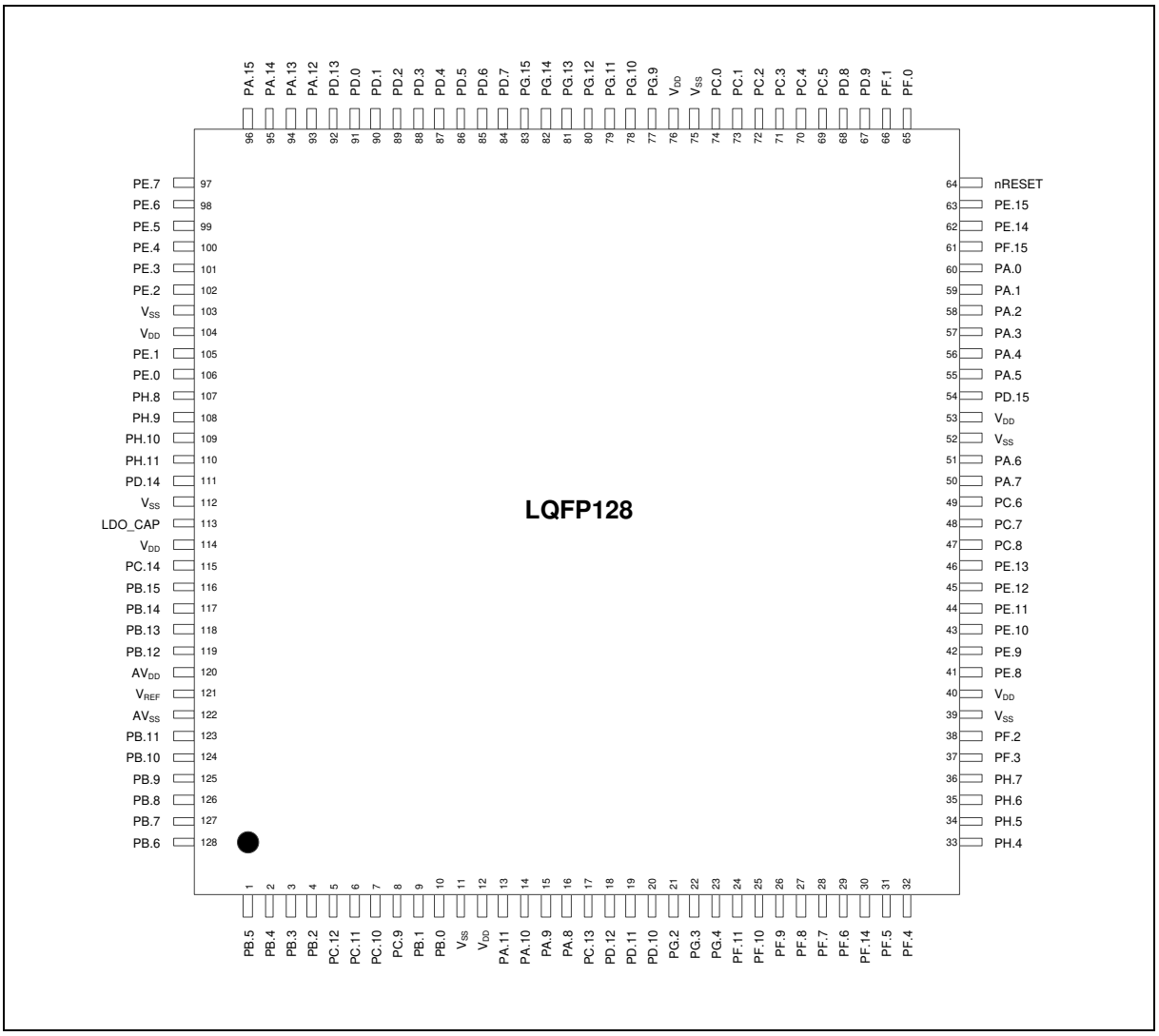

Figure 4.1-6 M031 Series LQFP 128-pin Diagram

4.1.2 M031 Series Multi-function Pin Diagram

4.1.2.1 M031 Series TSSOP 20-Pin Multi-function Pin Diagram

Corresponding Part Number: M031FB0AE, M031FC1AE

M031FB0AE

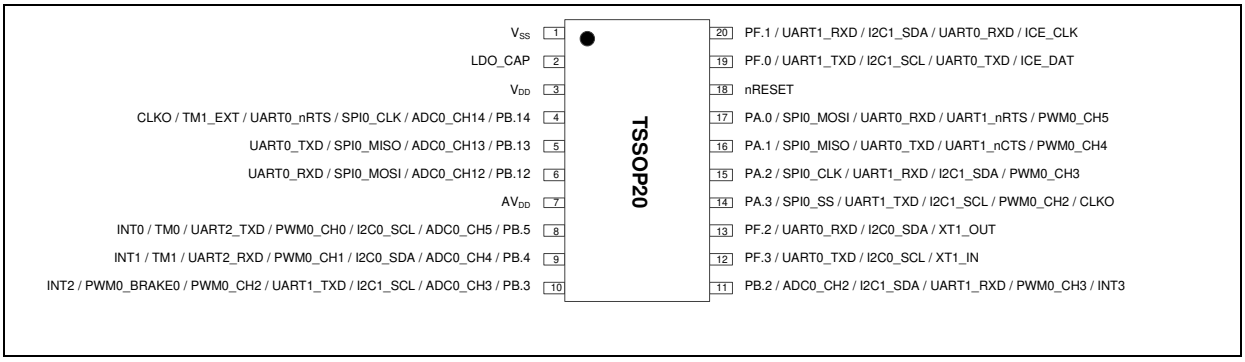

Figure 4.1-7 M031FB0AE Multi-function Pin Diagram

Pin	M031FB0AE Pin Function
1	VSS
2	LDO_CAP
3	V_{DD}
4	PB.14 / ADC0_CH14 / SPI0_CLK / UART0_nRTS / TM1_EXT / CLKO
5	PB.13 / ADC0_CH13 / SPI0_MISO / UART0_TXD
6	PB.12 / ADC0_CH12 / SPI0_MOSI / UART0_RXD
7	AV_{DD}
8	PB.5 / ADC0_CH5 / I2C0_SCL / PWM0_CH0 / UART2_TXD / TM0 / INT0
9	PB.4 / ADC0_CH4 / I2C0_SDA / PWM0_CH1 / UART2_RXD / TM1 / INT1
10	PB.3 / ADC0_CH3 / I2C1_SCL / UART1_TXD / PWM0_CH2 / PWM0_BRAKE0 / INT2
11	PB.2 / ADC0_CH2 / I2C1_SDA / UART1_RXD / PWM0_CH3 / INT3
12	PF.3 / UART0_TXD / I2C0_SCL / XT1_IN
13	PF.2 / UART0_RXD / I2C0_SDA / XT1_OUT
14	PA.3 / SPI0_SS / UART1_TXD / I2C1_SCL / PWM0_CH2 / CLKO
15	PA.2 / SPI0_CLK / UART1_RXD / I2C1_SDA / PWM0_CH3
16	PA.1 / SPI0_MISO / UART0_TXD / UART1_nCTS / PWM0_CH4
17	PA.0 / SPI0_MOSI / UART0_RXD / UART1_nRTS / PWM0_CH5
18	nRESET
19	PF.0 / UART1_TXD / I2C1_SCL / UART0_TXD / ICE_DAT
20	PF.1 / UART1_RXD / I2C1_SDA / UART0_RXD / ICE_CLK

Table 4.1-1 M031FB0AE Multi-function Pin Table

M031FC1AE

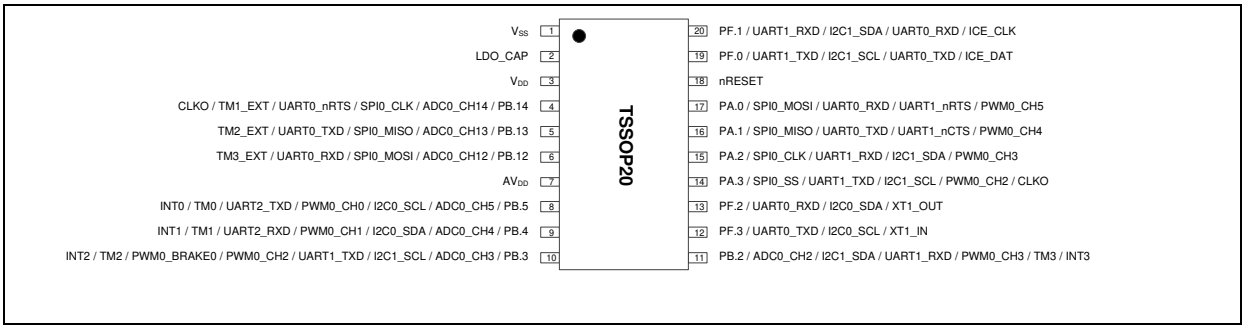

Figure 4.1-8 M031FC1AE Multi-function Pin Diagram

Pin	M031FC1AE Pin Function
1	VSS
2	LDO_CAP
3	V_{DD}
4	PB.14 / ADC0_CH14 / SPI0_CLK / UART0_nRTS / TM1_EXT / CLKO
5	PB.13 / ADC0_CH13 / SPI0_MISO / UART0_TXD / TM2_EXT
6	PB.12 / ADC0_CH12 / SPI0_MOSI / UART0_RXD / TM3_EXT
7	AV_{DD}
8	PB.5 / ADC0_CH5 / I2C0_SCL / PWM0_CH0 / UART2_TXD / TM0 / INT0
9	PB.4 / ADC0_CH4 / I2C0_SDA / PWM0_CH1 / UART2_RXD / TM1 / INT1
10	PB.3 / ADC0_CH3 / I2C1_SCL / UART1_TXD / PWM0_CH2 / PWM0_BRAKE0 / TM2 / INT2
11	PB.2 / ADC0_CH2 / I2C1_SDA / UART1_RXD / PWM0_CH3 / TM3 / INT3
12	PF.3 / UART0_TXD / I2C0_SCL / XT1_IN
13	PF.2 / UART0_RXD / I2C0_SDA / XT1_OUT
14	PA.3 / SPI0_SS / UART1_TXD / I2C1_SCL / PWM0_CH2 / CLKO
15	PA.2 / SPI0_CLK / UART1_RXD / I2C1_SDA / PWM0_CH3
16	PA.1 / SPI0_MISO / UART0_TXD / UART1_nCTS / PWM0_CH4
17	PA.0 / SPI0_MOSI / UART0_RXD / UART1_nRTS / PWM0_CH5
18	nRESET
19	PF.0 / UART1_TXD / I2C1_SCL / UART0_TXD / ICE_DAT
20	PF.1 / UART1_RXD / I2C1_SDA / UART0_RXD / ICE_CLK

Table 4.1-2 M031FC1AE Multi-function Pin Table

4.1.2.2 M031 Series TSSOP 28-Pin Multi-function Pin Diagram

Corresponding Part Number: M031EB0AE, M031EC1AE

M031EB0AE

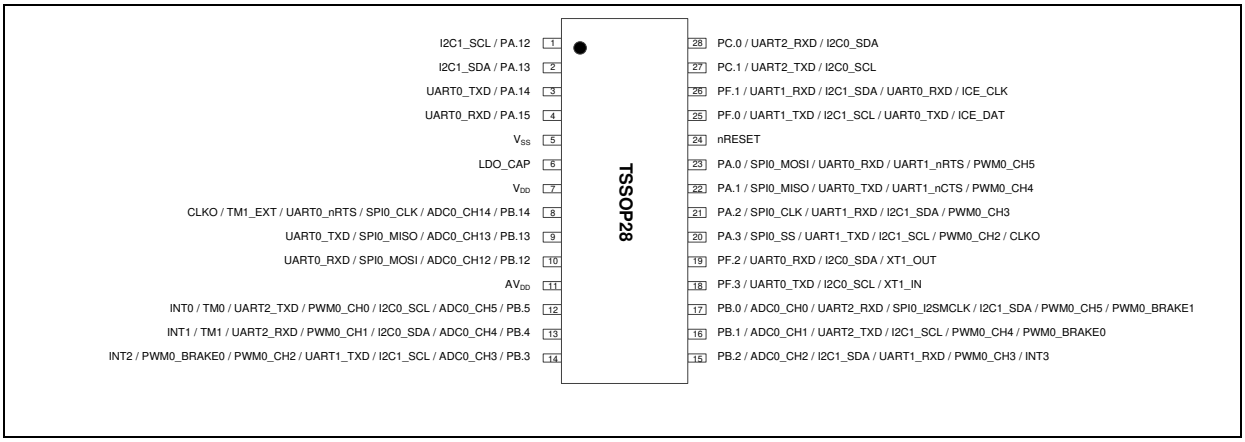

Figure 4.1-9 M031EB0AE Multi-function Pin Diagram

Pin	M031EB0AE Pin Function
1	PA.12 / I2C1_SCL
2	PA.13 / I2C1_SDA
3	PA.14 / UART0_TXD
4	PA.15 / UART0_RXD
5	VSS
6	LDO_CAP
7	V_{DD}
8	PB.14 / ADC0_CH14 / SPI0_CLK / UART0_nRTS / TM1_EXT / CLKO
9	PB.13 / ADC0_CH13 / SPI0_MISO / UART0_TXD
10	PB.12 / ADC0_CH12 / SPI0_MOSI / UART0_RXD
11	AV_{DD}
12	PB.5 / ADC0_CH5 / I2C0_SCL / PWM0_CH0 / UART2_TXD / TM0 / INT0
13	PB.4 / ADC0_CH4 / I2C0_SDA / PWM0_CH1 / UART2_RXD / TM1 / INT1
14	PB.3 / ADC0_CH3 / I2C1_SCL / UART1_TXD / PWM0_CH2 / PWM0_BRAKE0 / INT2
15	PB.2 / ADC0_CH2 / I2C1_SDA / UART1_RXD / PWM0_CH3 / INT3
16	PB.1 / ADC0_CH1 / UART2_TXD / I2C1_SCL / PWM0_CH4 / PWM0_BRAKE0
17	PB.0 / ADC0_CH0 / UART2_RXD / SPI0_I2SMCLK / I2C1_SDA / PWM0_CH5 / PWM0_BRAKE1
18	PF.3 / UART0_TXD / I2C0_SCL / XT1_IN
19	PF.2 / UART0_RXD / I2C0_SDA / XT1_OUT
20	PA.3 / SPI0_SS / UART1_TXD / I2C1_SCL / PWM0_CH2 / CLKO
21	PA.2 / SPI0_CLK / UART1_RXD / I2C1_SDA / PWM0_CH3

Pin	M031EB0AE Pin Function
22	PA.1 / SPI0_MISO / UART0_TXD / UART1_nCTS / PWM0_CH4
23	PA.0 / SPI0_MOSI / UART0_RXD / UART1_nRTS / PWM0_CH5
24	nRESET
25	PF.0 / UART1_TXD / I2C1_SCL / UART0_TXD / ICE_DAT
26	PF.1 / UART1_RXD / I2C1_SDA / UART0_RXD / ICE_CLK
27	PC.1 / UART2_TXD / I2C0_SCL
28	PC.0 / UART2_RXD / I2C0_SDA

Table 4.1-3 M031EB0AE Multi-function Pin Table

M031EC1AE

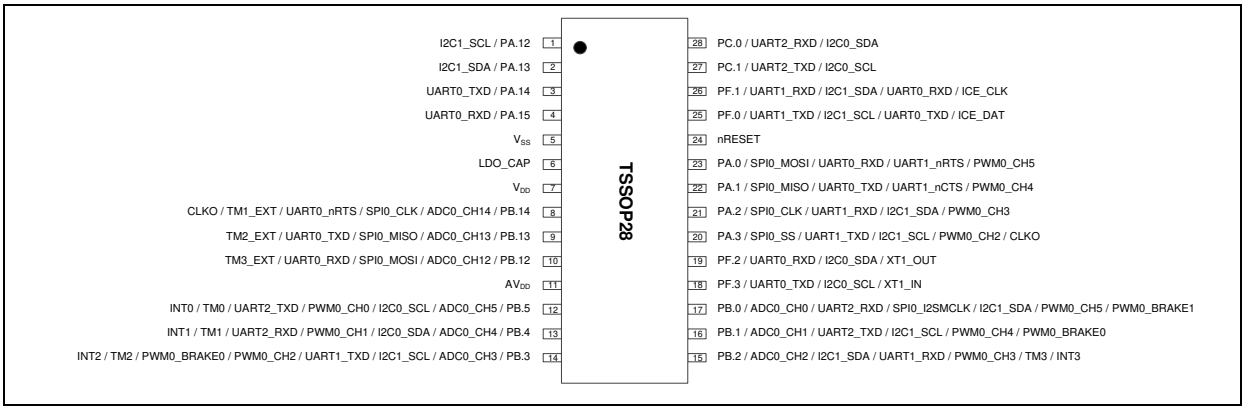

Figure 4.1-10 M031EC1AE Multi-function Pin Diagram

Pin	M031EC1AE Pin Function
1	PA.12 / I2C1_SCL
2	PA.13 / I2C1_SDA
3	PA.14 / UART0_TXD
4	PA.15 / UART0_RXD
5	VSS
6	LDO_CAP
7	V_{DD}
8	PB.14 / ADC0_CH14 / SPI0_CLK / UART0_nRTS / TM1_EXT / CLKO
9	PB.13 / ADC0_CH13 / SPI0_MISO / UART0_TXD / TM2_EXT
10	PB.12 / ADC0_CH12 / SPI0_MOSI / UART0_RXD / TM3_EXT
11	AV_{DD}
12	PB.5 / ADC0_CH5 / I2C0_SCL / PWM0_CH0 / UART2_TXD / TM0 / INT0
13	PB.4 / ADC0_CH4 / I2C0_SDA / PWM0_CH1 / UART2_RXD / TM1 / INT1
14	PB.3 / ADC0_CH3 / I2C1_SCL / UART1_TXD / PWM0_CH2 / PWM0_BRAKE0 / TM2 / INT2

Pin	M031EC1AE Pin Function
15	PB.2 / ADC0_CH2 / I2C1_SDA / UART1_RXD / PWM0_CH3 / TM3 / INT3
16	PB.1 / ADC0_CH1 / UART2_TXD / I2C1_SCL / PWM0_CH4 / PWM0_BRAKE0
17	PB.0 / ADC0_CH0 / UART2_RXD / SPI0_I2SMCLK / I2C1_SDA / PWM0_CH5 / PWM0_BRAKE1
18	PF.3 / UART0_TXD / I2C0_SCL / XT1_IN
19	PF.2 / UART0_RXD / I2C0_SDA / XT1_OUT
20	PA.3 / SPI0_SS / UART1_TXD / I2C1_SCL / PWM0_CH2 / CLKO
21	PA.2 / SPI0_CLK / UART1_RXD / I2C1_SDA / PWM0_CH3
22	PA.1 / SPI0_MISO / UART0_TXD / UART1_nCTS / PWM0_CH4
23	PA.0 / SPI0_MOSI / UART0_RXD / UART1_nRTS / PWM0_CH5
24	nRESET
25	PF.0 / UART1_TXD / I2C1_SCL / UART0_TXD / ICE_DAT
26	PF.1 / UART1_RXD / I2C1_SDA / UART0_RXD / ICE_CLK
27	PC.1 / UART2_TXD / I2C0_SCL
28	PC.0 / UART2_RXD / I2C0_SDA

Table 4.1-4 M031EC1AE Multi-function Pin Table

4.1.2.3 M031 Series QFN 33-Pin Multi-function Pin Diagram

Corresponding Part Number: M031TB0AE, M031TC1AE, M031TD2AE

M031TB0AE

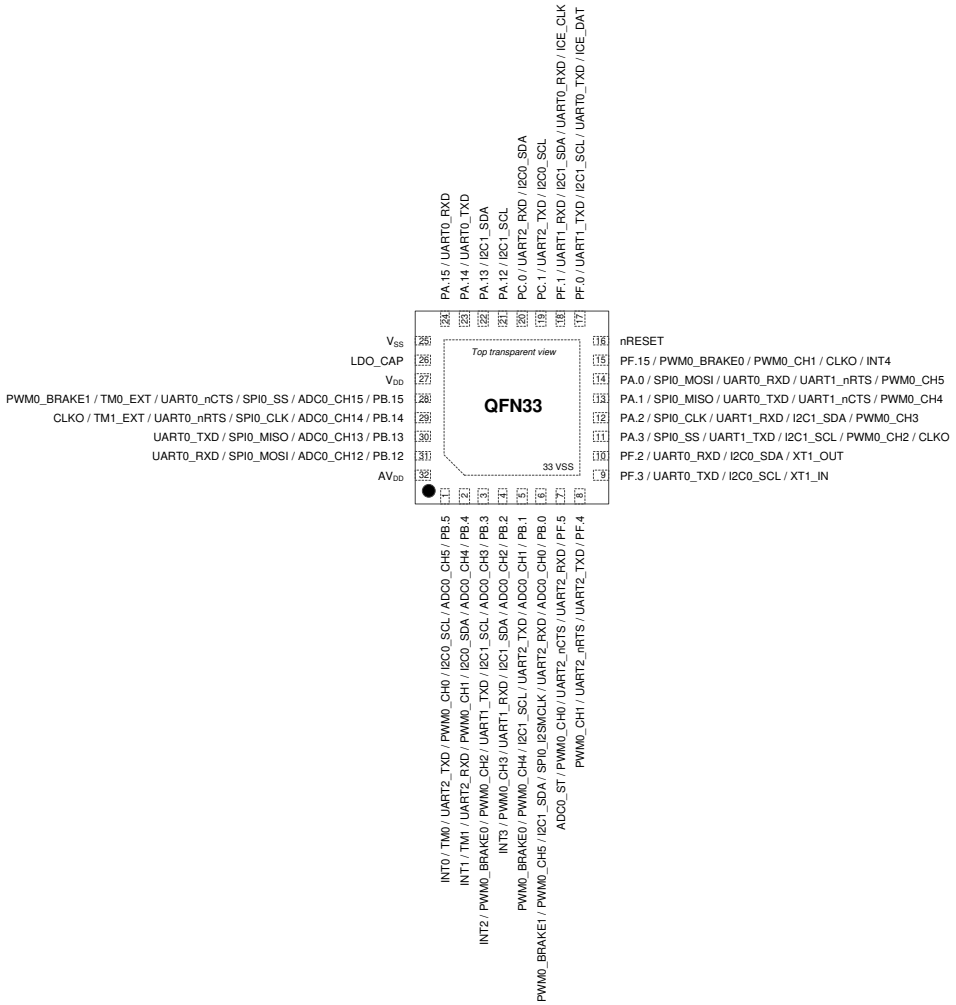

Figure 4.1-11 M031TB0AE Multi-function Pin Diagram

Pin	M031TB0AE Pin Function
1	PB.5 / ADC0_CH5 / I2C0_SCL / PWM0_CH0 / UART2_TXD / TM0 / INT0
2	PB.4 / ADC0_CH4 / I2C0_SDA / PWM0_CH1 / UART2_RXD / TM1 / INT1
3	PB.3 / ADC0_CH3 / I2C1_SCL / UART1_TXD / PWM0_CH2 / PWM0_BRAKE0 / INT2

Pin	M031TB0AE Pin Function
4	PB.2 / ADC0_CH2 / I2C1_SDA / UART1_RXD / PWM0_CH3 / INT3
5	PB.1 / ADC0_CH1 / UART2_TXD / I2C1_SCL / PWM0_CH4 / PWM0_BRAKE0
6	PB.0 / ADC0_CH0 / UART2_RXD / SPI0_I2SMCLK / I2C1_SDA / PWM0_CH5 / PWM0_BRAKE1
7	PF.5 / UART2_RXD / UART2_nCTS / PWM0_CH0 / ADC0_ST
8	PF.4 / UART2_TXD / UART2_nRTS / PWM0_CH1
9	PF.3 / UART0_TXD / I2C0_SCL / XT1_IN
10	PF.2 / UART0_RXD / I2C0_SDA / XT1_OUT
11	PA.3 / SPI0_SS / UART1_TXD / I2C1_SCL / PWM0_CH2 / CLKO
12	PA.2 / SPI0_CLK / UART1_RXD / I2C1_SDA / PWM0_CH3
13	PA.1 / SPI0_MISO / UART0_TXD / UART1_nCTS / PWM0_CH4
14	PA.0 / SPI0_MOSI / UART0_RXD / UART1_nRTS / PWM0_CH5
15	PF.15 / PWM0_BRAKE0 / PWM0_CH1 / CLKO / INT4
16	nRESET
17	PF.0 / UART1_TXD / I2C1_SCL / UART0_TXD / ICE_DAT
18	PF.1 / UART1_RXD / I2C1_SDA / UART0_RXD / ICE_CLK
19	PC.1 / UART2_TXD / I2C0_SCL
20	PC.0 / UART2_RXD / I2C0_SDA
21	PA.12 / I2C1_SCL
22	PA.13 / I2C1_SDA
23	PA.14 / UART0_TXD
24	PA.15 / UART0_RXD
25	VSS
26	LDO_CAP
27	V_{DD}
28	PB.15 / ADC0_CH15 / SPI0_SS / UART0_nCTS / TM0_EXT / PWM0_BRAKE1
29	PB.14 / ADC0_CH14 / SPI0_CLK / UART0_nRTS / TM1_EXT / CLKO
30	PB.13 / ADC0_CH13 / SPI0_MISO / UART0_TXD
31	PB.12 / ADC0_CH12 / SPI0_MOSI / UART0_RXD
32	AV_{DD}

Table 4.1-5 M031TB0AE Multi-function Pin Table

M031TC1AE

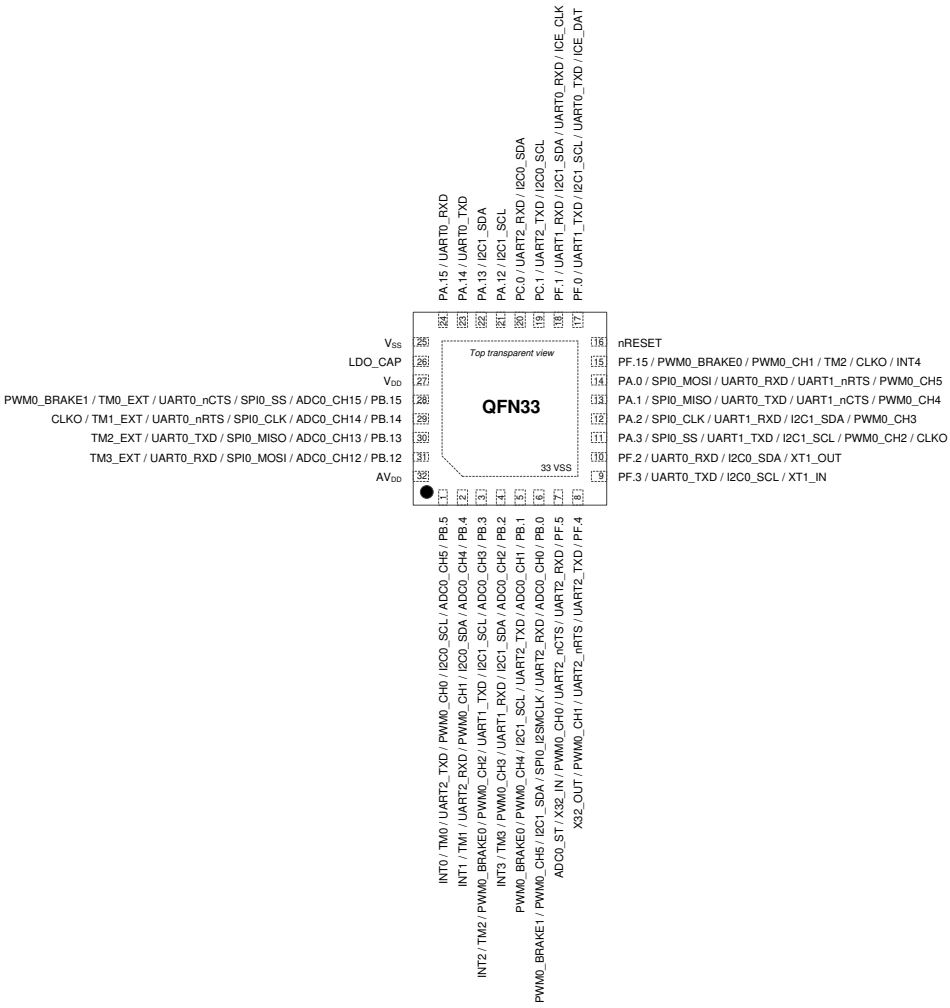

Figure 4.1-12 M031TC1AE Multi-function Pin Diagram

Pin	M031TC1AE Pin Function
1	PB.5 / ADC0_CH5 / I2C0_SCL / PWM0_CH0 / UART2_TXD / TM0 / INT0
2	PB.4 / ADC0_CH4 / I2C0_SDA / PWM0_CH1 / UART2_RXD / TM1 / INT1
3	PB.3 / ADC0_CH3 / I2C1_SCL / UART1_TXD / PWM0_CH2 / PWM0_BRAKE0 / TM2 / INT2
4	PB.2 / ADC0_CH2 / I2C1_SDA / UART1_RXD / PWM0_CH3 / TM3 / INT3

Pin	M031TC1AE Pin Function
5	PB.1 / ADC0_CH1 / UART2_TXD / I2C1_SCL / PWM0_CH4 / PWM0_BRAKE0
6	PB.0 / ADC0_CH0 / UART2_RXD / SPI0_I2SMCLK / I2C1_SDA / PWM0_CH5 / PWM0_BRAKE1
7	PF.5 / UART2_RXD / UART2_nCTS / PWM0_CH0 / X32_IN / ADC0_ST
8	PF.4 / UART2_TXD / UART2_nRTS / PWM0_CH1 / X32_OUT
9	PF.3 / UART0_TXD / I2C0_SCL / XT1_IN
10	PF.2 / UART0_RXD / I2C0_SDA / XT1_OUT
11	PA.3 / SPI0_SS / UART1_TXD / I2C1_SCL / PWM0_CH2 / CLKO
12	PA.2 / SPI0_CLK / UART1_RXD / I2C1_SDA / PWM0_CH3
13	PA.1 / SPI0_MISO / UART0_TXD / UART1_nCTS / PWM0_CH4
14	PA.0 / SPI0_MOSI / UART0_RXD / UART1_nRTS / PWM0_CH5
15	PF.15 / PWM0_BRAKE0 / PWM0_CH1 / TM2 / CLKO / INT4
16	nRESET
17	PF.0 / UART1_TXD / I2C1_SCL / UART0_TXD / ICE_DAT
18	PF.1 / UART1_RXD / I2C1_SDA / UART0_RXD / ICE_CLK
19	PC.1 / UART2_TXD / I2C0_SCL
20	PC.0 / UART2_RXD / I2C0_SDA
21	PA.12 / I2C1_SCL
22	PA.13 / I2C1_SDA
23	PA.14 / UART0_TXD
24	PA.15 / UART0_RXD
25	VSS
26	LDO_CAP
27	V_{DD}
28	PB.15 / ADC0_CH15 / SPI0_SS / UART0_nCTS / TM0_EXT / PWM0_BRAKE1
29	PB.14 / ADC0_CH14 / SPI0_CLK / UART0_nRTS / TM1_EXT / CLKO
30	PB.13 / ADC0_CH13 / SPI0_MISO / UART0_TXD / TM2_EXT
31	PB.12 / ADC0_CH12 / SPI0_MOSI / UART0_RXD / TM3_EXT
32	AV_{DD}

Table 4.1-6 M031TC1AE Multi-function Pin Table

M031TD2AE

Figure 4.1-13 M031TD2AE Multi-function Pin Diagram

Pin	M031TD2AE Pin Function
1	PB.5 / ADC0_CH5 / ACMP1_N / I2C0_SCL / PWM0_CH0 / UART2_TXD / TM0 / INT0
2	PB.4 / ADC0_CH4 / ACMP1_P1 / I2C0_SDA / PWM0_CH1 / UART2_RXD / TM1 / INT1
3	PB.3 / ADC0_CH3 / ACMP0_N / I2C1_SCL / UART1_TXD / PWM0_CH2 / PWM0_BRAKE0 / TM2 / INT2
4	PB.2 / ADC0_CH2 / ACMP0_P1 / I2C1_SDA / UART1_RXD / PWM0_CH3 / TM3 / INT3
5	PB.1 / ADC0_CH1 / UART2_TXD / I2C1_SCL / PWM0_CH4 / PWM1_CH4 / PWM0_BRAKE0
6	PB.0 / ADC0_CH0 / UART2_RXD / SPI0_I2SMCLK / I2C1_SDA / PWM0_CH5 / PWM1_CH5 / PWM0_BRAKE1
7	PF.5 / UART2_RXD / UART2_nCTS / PWM0_CH0 / X32_IN / ADC0_ST

Pin	M031TD2AE Pin Function
8	PF.4 / UART2_TXD / UART2_nRTS / PWM0_CH1 / X32_OUT
9	PF.3 / UART0_TXD / I2C0_SCL / XT1_IN
10	PF.2 / UART0_RXD / I2C0_SDA / XT1_OUT
11	PA.3 / SPI0_SS / UART1_TXD / I2C1_SCL / PWM0_CH2 / CLKO / PWM1_BRAKE1
12	PA.2 / SPI0_CLK / UART1_RXD / I2C1_SDA / PWM0_CH3
13	PA.1 / SPI0_MISO / UART0_TXD / UART1_nCTS / PWM0_CH4
14	PA.0 / SPI0_MOSI / UART0_RXD / UART1_nRTS / PWM0_CH5
15	PF.15 / PWM0_BRAKE0 / PWM0_CH1 / TM2 / CLKO / INT4
16	nRESET
17	PF.0 / UART1_TXD / I2C1_SCL / UART0_TXD / ICE_DAT
18	PF.1 / UART1_RXD / I2C1_SDA / UART0_RXD / ICE_CLK
19	PC.1 / UART2_TXD / I2C0_SCL / PWM1_CH4 / ACMP0_O
20	PC.0 / UART2_RXD / I2C0_SDA / PWM1_CH5 / ACMP1_O
21	PA.12 / I2C1_SCL
22	PA.13 / I2C1_SDA
23	PA.14 / UART0_TXD
24	PA.15 / UART0_RXD
25	VSS
26	LDO_CAP
27	V_{DD}
28	PB.15 / ADC0_CH15 / SPI0_SS / USCI0_CTL1 / UART0_nCTS / PWM1_CH0 / TM0_EXT / PWM0_BRAKE1
29	PB.14 / ADC0_CH14 / SPI0_CLK / USCI0_DAT1 / UART0_nRTS / PWM1_CH1 / TM1_EXT / CLKO
30	PB.13 / ADC0_CH13 / ACMP0_P3 / ACMP1_P3 / SPI0_MISO / USCI0_DAT0 / UART0_TXD / PWM1_CH2 / TM2_EXT
31	PB.12 / ADC0_CH12 / ACMP0_P2 / ACMP1_P2 / SPI0_MOSI / USCI0_CLK / UART0_RXD / PWM1_CH3 / TM3_EXT
32	AV_{DD}

Table 4.1-7 M031TD2AE Multi-function Pin Table

M031TE3AE

Figure 4.1-14 M031TE3AE Multi-function Pin Diagram

Pin	M031TE3AE Pin Function
1	PB.5 / ADC0_CH5 / ACMP1_N / I2C0_SCL / PWM0_CH0 / UART2_TXD / TM0 / INT0
2	PB.4 / ADC0_CH4 / ACMP1_P1 / I2C0_SDA / PWM0_CH1 / UART2_RXD / TM1 / INT1
3	PB.3 / ADC0_CH3 / ACMP0_N / I2C1_SCL / UART1_TXD / PWM0_CH2 / PWM0_BRAKE0 / TM2 / INT2
4	PB.2 / ADC0_CH2 / ACMP0_P1 / I2C1_SDA / UART1_RXD / PWM0_CH3 / TM3 / INT3
5	PB.1 / ADC0_CH1 / UART2_TXD / I2C1_SCL / PWM0_CH4 / PWM1_CH4 / PWM0_BRAKE0
6	PB.0 / ADC0_CH0 / UART2_RXD / SPI0_I2SMCLK / I2C1_SDA / PWM0_CH5 / PWM1_CH5 / PWM0_BRAKE1
7	PF.5 / UART2_RXD / UART2_nCTS / PWM0_CH0 / X32_IN / ADC0_ST

Pin	M031TE3AE Pin Function
8	PF.4 / UART2_TXD / UART2_nRTS / PWM0_CH1 / X32_OUT
9	PF.3 / UART0_TXD / I2C0_SCL / XT1_IN
10	PF.2 / UART0_RXD / I2C0_SDA / XT1_OUT
11	PA.3 / SPI0_SS / UART1_TXD / I2C1_SCL / PWM0_CH2 / CLKO / PWM1_BRAKE1
12	PA.2 / SPI0_CLK / UART1_RXD / I2C1_SDA / PWM0_CH3
13	PA.1 / SPI0_MISO / UART0_TXD / UART1_nCTS / PWM0_CH4
14	PA.0 / SPI0_MOSI / UART0_RXD / UART1_nRTS / PWM0_CH5
15	PF.15 / PWM0_BRAKE0 / PWM0_CH1 / TM2 / CLKO / INT4
16	nRESET
17	PF.0 / UART1_TXD / I2C1_SCL / UART0_TXD / ICE_DAT
18	PF.1 / UART1_RXD / I2C1_SDA / UART0_RXD / ICE_CLK
19	PC.1 / UART2_TXD / I2C0_SCL / PWM1_CH4 / ACMP0_O
20	PC.0 / UART2_RXD / I2C0_SDA / PWM1_CH5 / ACMP1_O
21	PA.12 / I2C1_SCL
22	PA.13 / I2C1_SDA
23	PA.14 / UART0_TXD
24	PA.15 / UART0_RXD
25	VSS
26	LDO_CAP
27	V_{DD}
28	PB.15 / ADC0_CH15 / SPI0_SS / USCI0_CTL1 / UART0_nCTS / PWM1_CH0 / TM0_EXT / PWM0_BRAKE1
29	PB.14 / ADC0_CH14 / SPI0_CLK / USCI0_DAT1 / UART0_nRTS / PWM1_CH1 / TM1_EXT / CLKO
30	PB.13 / ADC0_CH13 / ACMP0_P3 / ACMP1_P3 / SPI0_MISO / USCI0_DAT0 / UART0_TXD / PWM1_CH2 / TM2_EXT
31	PB.12 / ADC0_CH12 / ACMP0_P2 / ACMP1_P2 / SPI0_MOSI / USCI0_CLK / UART0_RXD / PWM1_CH3 / TM3_EXT
32	AV_{DD}

Table 4.1-8 M031TE3AE Multi-function Pin Table

4.1.2.4 M031 Series LQFP 48-Pin Multi-function Pin Diagram

Corresponding Part Number: M031LC2AE, M031LD2AE, M031LE3AE, M031LG6AE, M031LG8AE

M031LC2AE

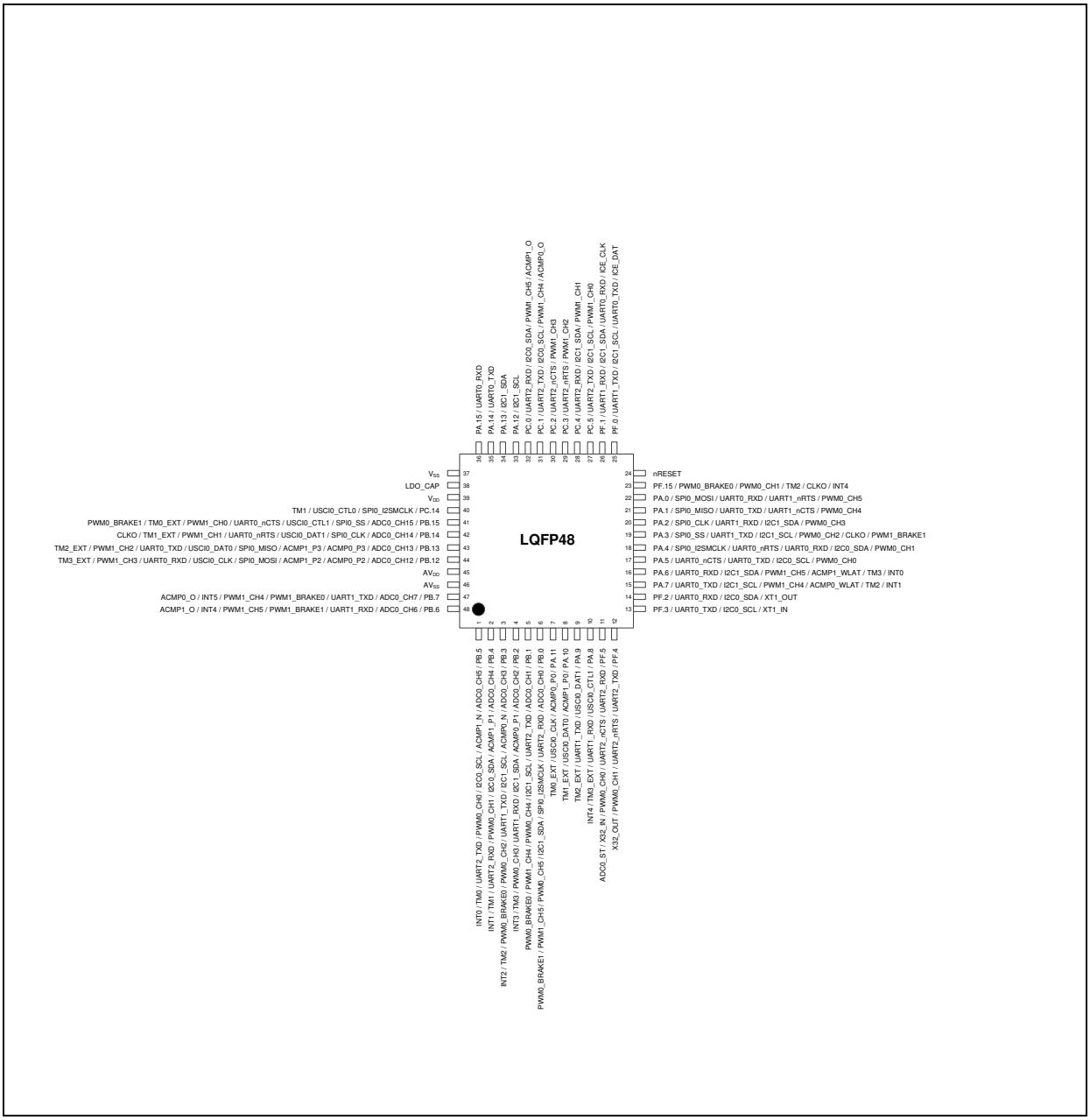

Figure 4.1-15 M031LC2AE Multi-function Pin Diagram

Pin	M031LC2AE Pin Function
1	PB.5 / ADC0_CH5 / ACMP1_N / I2C0_SCL / PWM0_CH0 / UART2_TXD / TM0 / INT0
2	PB.4 / ADC0_CH4 / ACMP1_P1 / I2C0_SDA / PWM0_CH1 / UART2_RXD / TM1 / INT1
3	PB.3 / ADC0_CH3 / ACMP0_N / I2C1_SCL / UART1_TXD / PWM0_CH2 / PWM0_BRAKE0 / TM2 / INT2

Pin	M031LC2AE Pin Function
4	PB.2 / ADC0_CH2 / ACMP0_P1 / I2C1_SDA / UART1_RXD / PWM0_CH3 / TM3 / INT3
5	PB.1 / ADC0_CH1 / UART2_TXD / I2C1_SCL / PWM0_CH4 / PWM1_CH4 / PWM0_BRAKE0
6	PB.0 / ADC0_CH0 / UART2_RXD / SPI0_I2SMCLK / I2C1_SDA / PWM0_CH5 / PWM1_CH5 / PWM0_BRAKE1
7	PA.11 / ACMP0_P0 / USCI0_CLK / TM0_EXT
8	PA.10 / ACMP1_P0 / USCI0_DAT0 / TM1_EXT
9	PA.9 / USCI0_DAT1 / UART1_TXD / TM2_EXT
10	PA.8 / USCI0_CTL1 / UART1_RXD / TM3_EXT / INT4
11	PF.5 / UART2_RXD / UART2_nCTS / PWM0_CH0 / X32_IN / ADC0_ST
12	PF.4 / UART2_TXD / UART2_nRTS / PWM0_CH1 / X32_OUT
13	PF.3 / UART0_TXD / I2C0_SCL / XT1_IN
14	PF.2 / UART0_RXD / I2C0_SDA / XT1_OUT
15	PA.7 / UART0_TXD / I2C1_SCL / PWM1_CH4 / ACMP0_WLAT / TM2 / INT1
16	PA.6 / UART0_RXD / I2C1_SDA / PWM1_CH5 / ACMP1_WLAT / TM3 / INT0
17	PA.5 / UART0_nCTS / UART0_TXD / I2C0_SCL / PWM0_CH0
18	PA.4 / SPI0_I2SMCLK / UART0_nRTS / UART0_RXD / I2C0_SDA / PWM0_CH1
19	PA.3 / SPI0_SS / UART1_TXD / I2C1_SCL / PWM0_CH2 / CLKO / PWM1_BRAKE1
20	PA.2 / SPI0_CLK / UART1_RXD / I2C1_SDA / PWM0_CH3
21	PA.1 / SPI0_MISO / UART0_TXD / UART1_nCTS / PWM0_CH4
22	PA.0 / SPI0_MOSI / UART0_RXD / UART1_nRTS / PWM0_CH5
23	PF.15 / PWM0_BRAKE0 / PWM0_CH1 / TM2 / CLKO / INT4
24	nRESET
25	PF.0 / UART1_TXD / I2C1_SCL / UART0_TXD / ICE_DAT
26	PF.1 / UART1_RXD / I2C1_SDA / UART0_RXD / ICE_CLK
27	PC.5 / UART2_TXD / I2C1_SCL / PWM1_CH0
28	PC.4 / UART2_RXD / I2C1_SDA / PWM1_CH1
29	PC.3 / UART2_nRTS / PWM1_CH2
30	PC.2 / UART2_nCTS / PWM1_CH3
31	PC.1 / UART2_TXD / I2C0_SCL / PWM1_CH4 / ACMP0_O
32	PC.0 / UART2_RXD / I2C0_SDA / PWM1_CH5 / ACMP1_O
33	PA.12 / I2C1_SCL
34	PA.13 / I2C1_SDA
35	PA.14 / UART0_TXD
36	PA.15 / UART0_RXD
37	VSS

Pin	M031LC2AE Pin Function
38	LDO_CAP
39	V_{DD}
40	PC.14 / SPI0_I2SMCLK / USCI0_CTL0 / TM1
41	PB.15 / ADC0_CH15 / SPI0_SS / USCI0_CTL1 / UART0_nCTS / PWM1_CH0 / TM0_EXT / PWM0_BRAKE1
42	PB.14 / ADC0_CH14 / SPI0_CLK / USCI0_DAT1 / UART0_nRTS / PWM1_CH1 / TM1_EXT / CLKO
43	PB.13 / ADC0_CH13 / ACMP0_P3 / ACMP1_P3 / SPI0_MISO / USCI0_DAT0 / UART0_TXD / PWM1_CH2 / TM2_EXT
44	PB.12 / ADC0_CH12 / ACMP0_P2 / ACMP1_P2 / SPI0_MOSI / USCI0_CLK / UART0_RXD / PWM1_CH3 / TM3_EXT
45	AV_{DD}
46	AVSS
47	PB.7 / ADC0_CH7 / UART1_TXD / PWM1_BRAKE0 / PWM1_CH4 / INT5 / ACMP0_O
48	PB.6 / ADC0_CH6 / UART1_RXD / PWM1_BRAKE1 / PWM1_CH5 / INT4 / ACMP1_O

Table 4.1-9 M031LC2AE Multi-function Pin Table

M031LD2AE

Figure 4.1-16 M031LD2AE Multi-function Pin Diagram

Pin	M031LD2AE Pin Function
1	PB.5 / ADC0_CH5 / ACMP1_N / I2C0_SCL / PWM0_CH0 / UART2_TXD / TM0 / INT0
2	PB.4 / ADC0_CH4 / ACMP1_P1 / I2C0_SDA / PWM0_CH1 / UART2_RXD / TM1 / INT1
3	PB.3 / ADC0_CH3 / ACMP0_N / I2C1_SCL / UART1_TXD / PWM0_CH2 / PWM0_BRAKE0 / TM2 / INT2
4	PB.2 / ADC0_CH2 / ACMP0_P1 / I2C1_SDA / UART1_RXD / PWM0_CH3 / TM3 / INT3
5	PB.1 / ADC0_CH1 / UART2_TXD / I2C1_SCL / PWM0_CH4 / PWM1_CH4 / PWM0_BRAKE0
6	PB.0 / ADC0_CH0 / UART2_RXD / SPI0_I2SMCLK / I2C1_SDA / PWM0_CH5 / PWM1_CH5 / PWM0_BRAKE1

Pin	M031LD2AE Pin Function
7	PA.11 / ACMP0_P0 / USCI0_CLK / TM0_EXT
8	PA.10 / ACMP1_P0 / USCI0_DAT0 / TM1_EXT
9	PA.9 / USCI0_DAT1 / UART1_TXD / TM2_EXT
10	PA.8 / USCI0_CTL1 / UART1_RXD / TM3_EXT / INT4
11	PF.5 / UART2_RXD / UART2_nCTS / PWM0_CH0 / X32_IN / ADC0_ST
12	PF.4 / UART2_TXD / UART2_nRTS / PWM0_CH1 / X32_OUT
13	PF.3 / UART0_TXD / I2C0_SCL / XT1_IN
14	PF.2 / UART0_RXD / I2C0_SDA / XT1_OUT
15	PA.7 / UART0_TXD / I2C1_SCL / PWM1_CH4 / ACMP0_WLAT / TM2 / INT1
16	PA.6 / UART0_RXD / I2C1_SDA / PWM1_CH5 / ACMP1_WLAT / TM3 / INT0
17	PA.5 / UART0_nCTS / UART0_TXD / I2C0_SCL / PWM0_CH0
18	PA.4 / SPI0_I2SMCLK / UART0_nRTS / UART0_RXD / I2C0_SDA / PWM0_CH1
19	PA.3 / SPI0_SS / UART1_TXD / I2C1_SCL / PWM0_CH2 / CLKO / PWM1_BRAKE1
20	PA.2 / SPI0_CLK / UART1_RXD / I2C1_SDA / PWM0_CH3
21	PA.1 / SPI0_MISO / UART0_TXD / UART1_nCTS / PWM0_CH4
22	PA.0 / SPI0_MOSI / UART0_RXD / UART1_nRTS / PWM0_CH5
23	PF.15 / PWM0_BRAKE0 / PWM0_CH1 / TM2 / CLKO / INT4
24	nRESET
25	PF.0 / UART1_TXD / I2C1_SCL / UART0_TXD / ICE_DAT
26	PF.1 / UART1_RXD / I2C1_SDA / UART0_RXD / ICE_CLK
27	PC.5 / UART2_TXD / I2C1_SCL / PWM1_CH0
28	PC.4 / UART2_RXD / I2C1_SDA / PWM1_CH1
29	PC.3 / UART2_nRTS / PWM1_CH2
30	PC.2 / UART2_nCTS / PWM1_CH3
31	PC.1 / UART2_TXD / I2C0_SCL / PWM1_CH4 / ACMP0_O
32	PC.0 / UART2_RXD / I2C0_SDA / PWM1_CH5 / ACMP1_O
33	PA.12 / I2C1_SCL
34	PA.13 / I2C1_SDA
35	PA.14 / UART0_TXD
36	PA.15 / UART0_RXD
37	VSS
38	LDO_CAP
39	V_{DD}
40	PC.14 / SPI0_I2SMCLK / USCI0_CTL0 / TM1

Pin	M031LD2AE Pin Function
41	PB.15 / ADC0_CH15 / SPI0_SS / USCI0_CTL1 / UART0_nCTS / PWM1_CH0 / TM0_EXT / PWM0_BRAKE1
42	PB.14 / ADC0_CH14 / SPI0_CLK / USCI0_DAT1 / UART0_nRTS / PWM1_CH1 / TM1_EXT / CLKO
43	PB.13 / ADC0_CH13 / ACMP0_P3 / ACMP1_P3 / SPI0_MISO / USCI0_DAT0 / UART0_TXD / PWM1_CH2 / TM2_EXT
44	PB.12 / ADC0_CH12 / ACMP0_P2 / ACMP1_P2 / SPI0_MOSI / USCI0_CLK / UART0_RXD / PWM1_CH3 / TM3_EXT
45	AV_{DD}
46	AVSS
47	PB.7 / ADC0_CH7 / UART1_TXD / PWM1_BRAKE0 / PWM1_CH4 / INT5 / ACMP0_O
48	PB.6 / ADC0_CH6 / UART1_RXD / PWM1_BRAKE1 / PWM1_CH5 / INT4 / ACMP1_O

Table 4.1-10 M031LD2AE Multi-function Pin Table

M031LE3AE

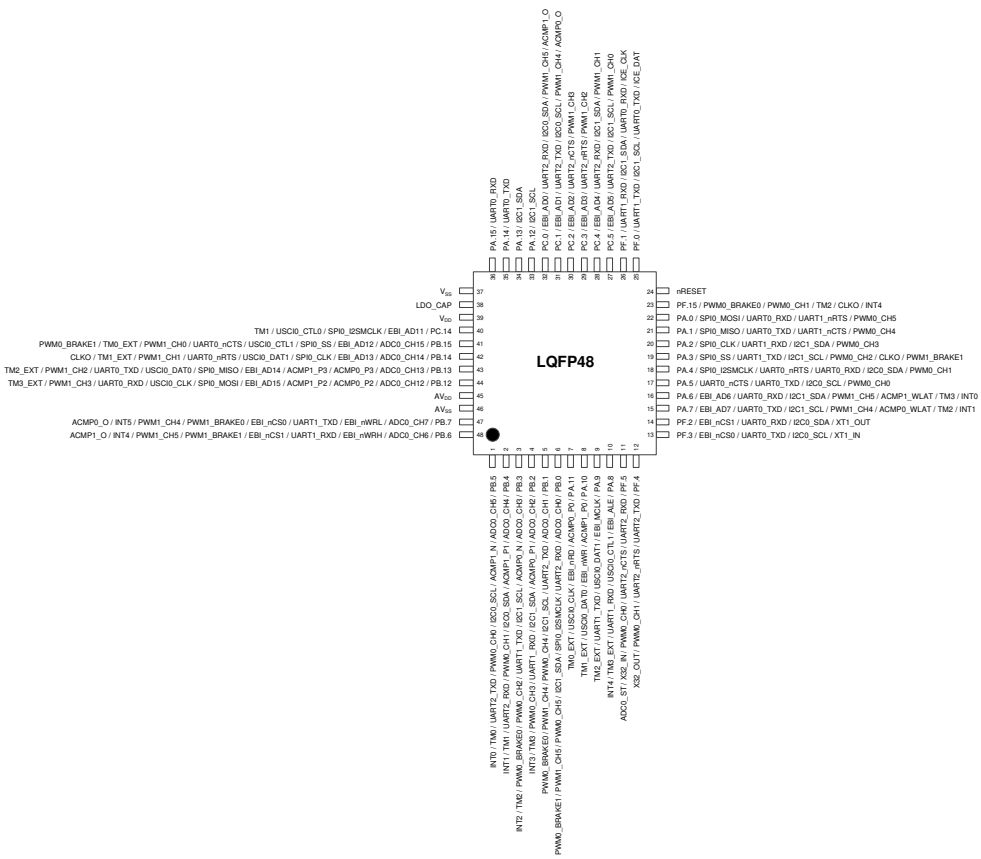

Figure 4.1-17 M031LE3AE Multi-function Pin Diagram

Pin	M031LE3AE Pin Function
1	PB.5 / ADC0_CH5 / ACMP1_N / I2C0_SCL / PWM0_CH0 / UART2_TXD / TM0 / INT0
2	PB.4 / ADC0_CH4 / ACMP1_P1 / I2C0_SDA / PWM0_CH1 / UART2_RXD / TM1 / INT1
3	PB.3 / ADC0_CH3 / ACMP0_N / I2C1_SCL / UART1_TXD / PWM0_CH2 / PWM0_BRAKE0 / TM2 / INT2
4	PB.2 / ADC0_CH2 / ACMP0_P1 / I2C1_SDA / UART1_RXD / PWM0_CH3 / TM3 / INT3
5	PB.1 / ADC0_CH1 / UART2_TXD / I2C1_SCL / PWM0_CH4 / PWM1_CH4 / PWM0_BRAKE0
6	PB.0 / ADC0_CH0 / UART2_RXD / SPI0_I2SMCLK / I2C1_SDA / PWM0_CH5 / PWM1_CH5 / PWM0_BRAKE1
7	PA.11 / ACMP0_P0 / EBI_nRD / USCI0_CLK / TM0_EXT
8	PA.10 / ACMP1_P0 / EBI_nWR / USCI0_DAT0 / TM1_EXT
9	PA.9 / EBI_MCLK / USCI0_DAT1 / UART1_TXD / TM2_EXT
10	PA.8 / EBI_ALE / USCI0_CTL1 / UART1_RXD / TM3_EXT / INT4
11	PF.5 / UART2_RXD / UART2_nCTS / PWM0_CH0 / X32_IN / ADC0_ST
12	PF.4 / UART2_TXD / UART2_nRTS / PWM0_CH1 / X32_OUT
13	PF.3 / EBI_nCS0 / UART0_TXD / I2C0_SCL / XT1_IN
14	PF.2 / EBI_nCS1 / UART0_RXD / I2C0_SDA / XT1_OUT
15	PA.7 / EBI_AD7 / UART0_TXD / I2C1_SCL / PWM1_CH4 / ACMP0_WLAT / TM2 / INT1
16	PA.6 / EBI_AD6 / UART0_RXD / I2C1_SDA / PWM1_CH5 / ACMP1_WLAT / TM3 / INT0
17	PA.5 / UART0_nCTS / UART0_TXD / I2C0_SCL / PWM0_CH0
18	PA.4 / SPI0_I2SMCLK / UART0_nRTS / UART0_RXD / I2C0_SDA / PWM0_CH1
19	PA.3 / SPI0_SS / UART1_TXD / I2C1_SCL / PWM0_CH2 / CLKO / PWM1_BRAKE1
20	PA.2 / SPI0_CLK / UART1_RXD / I2C1_SDA / PWM0_CH3
21	PA.1 / SPI0_MISO / UART0_TXD / UART1_nCTS / PWM0_CH4
22	PA.0 / SPI0_MOSI / UART0_RXD / UART1_nRTS / PWM0_CH5
23	PF.15 / PWM0_BRAKE0 / PWM0_CH1 / TM2 / CLKO / INT4
24	nRESET
25	PF.0 / UART1_TXD / I2C1_SCL / UART0_TXD / ICE_DAT
26	PF.1 / UART1_RXD / I2C1_SDA / UART0_RXD / ICE_CLK
27	PC.5 / EBI_AD5 / UART2_TXD / I2C1_SCL / PWM1_CH0
28	PC.4 / EBI_AD4 / UART2_RXD / I2C1_SDA / PWM1_CH1
29	PC.3 / EBI_AD3 / UART2_nRTS / PWM1_CH2
30	PC.2 / EBI_AD2 / UART2_nCTS / PWM1_CH3
31	PC.1 / EBI_AD1 / UART2_TXD / I2C0_SCL / PWM1_CH4 / ACMP0_O
32	PC.0 / EBI_AD0 / UART2_RXD / I2C0_SDA / PWM1_CH5 / ACMP1_O
33	PA.12 / I2C1_SCL

Pin	M031LE3AE Pin Function
34	PA.13 / I2C1_SDA
35	PA.14 / UART0_TXD
36	PA.15 / UART0_RXD
37	VSS
38	LDO_CAP
39	V_{DD}
40	PC.14 / EBI_AD11 / SPI0_I2SMCLK / USCI0_CTL0 / TM1
41	PB.15 / ADC0_CH15 / EBI_AD12 / SPI0_SS / USCI0_CTL1 / UART0_nCTS / PWM1_CH0 / TM0_EXT / PWM0_BRAKE1
42	PB.14 / ADC0_CH14 / EBI_AD13 / SPI0_CLK / USCI0_DAT1 / UART0_nRTS / PWM1_CH1 / TM1_EXT / CLKO
43	PB.13 / ADC0_CH13 / ACMP0_P3 / ACMP1_P3 / EBI_AD14 / SPI0_MISO / USCI0_DAT0 / UART0_TXD / PWM1_CH2 / TM2_EXT
44	PB.12 / ADC0_CH12 / ACMP0_P2 / ACMP1_P2 / EBI_AD15 / SPI0_MOSI / USCI0_CLK / UART0_RXD / PWM1_CH3 / TM3_EXT
45	AV_{DD}
46	AVSS
47	PB.7 / ADC0_CH7 / EBI_nWRL / UART1_TXD / EBI_nCS0 / PWM1_BRAKE0 / PWM1_CH4 / INT5 / ACMP0_O
48	PB.6 / ADC0_CH6 / EBI_nWRH / UART1_RXD / EBI_nCS1 / PWM1_BRAKE1 / PWM1_CH5 / INT4 / ACMP1_O

Table 4.1-11 M031LE3AE Multi-function Pin Table

M031LG6AE

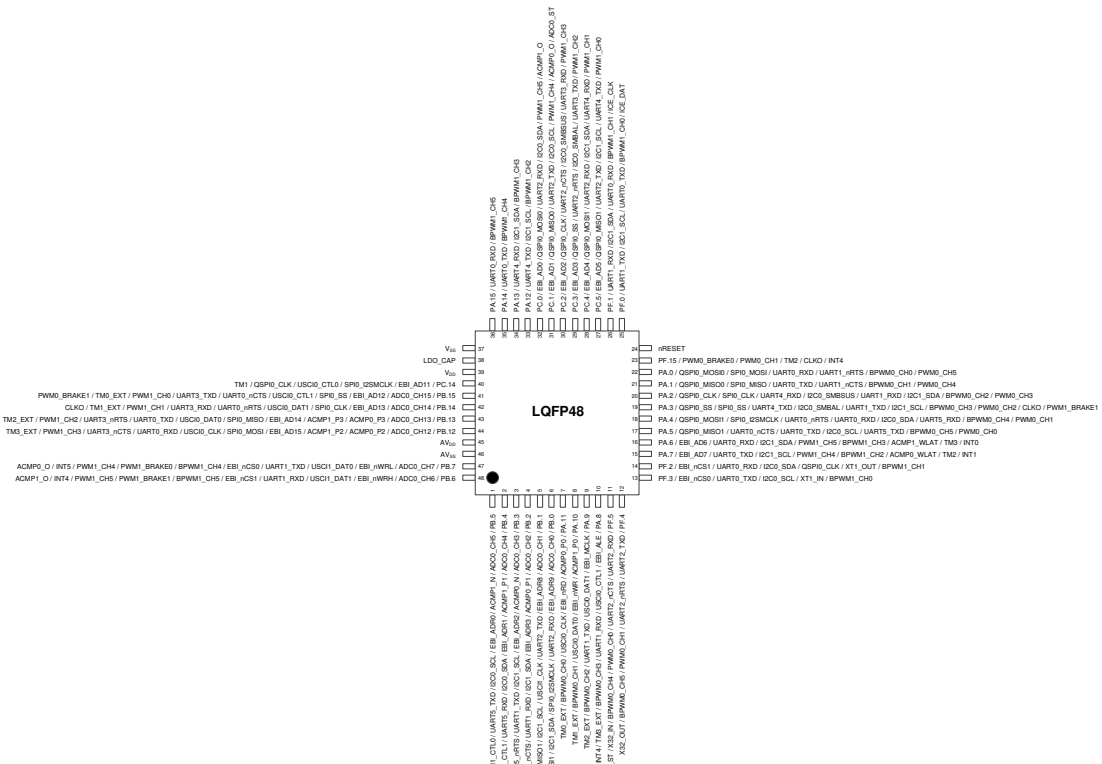

Figure 4.1-18 M031LG6AE Multi-function Pin Diagram

Pin	M031LG6AE Pin Function
1	PB.5 / ADC0_CH5 / ACMP1_N / EBI_ADR0 / I2C0_SCL / UART5_TXD / USCI1_CTL0 / PWM0_CH0 / UART2_TXD / TM0 / INT0
2	PB.4 / ADC0_CH4 / ACMP1_P1 / EBI_ADR1 / I2C0_SDA / UART5_RXD / USCI1_CTL1 / PWM0_CH1 / UART2_RXD / TM1 / INT1
3	PB.3 / ADC0_CH3 / ACMP0_N / EBI_ADR2 / I2C1_SCL / UART1_TXD / UART5_nRTS / USCI1_DAT1 / PWM0_CH2 / PWM0_BRAKE0 / TM2 / INT2
4	PB.2 / ADC0_CH2 / ACMP0_P1 / EBI_ADR3 / I2C1_SDA / UART1_RXD / UART5_nCTS / USCI1_DAT0 / PWM0_CH3 / TM3 / INT3

Pin	M031LG6AE Pin Function
5	PB.1 / ADC0_CH1 / EBI_ADR8 / UART2_TXD / USCI1_CLK / I2C1_SCL / QSPI0_MISO1 / PWM0_CH4 / PWM1_CH4 / PWM0_BRAKE0
6	PB.0 / ADC0_CH0 / EBI_ADR9 / UART2_RXD / SPI0_I2SMCLK / I2C1_SDA / QSPI0_MOSI1 / PWM0_CH5 / PWM1_CH5 / PWM0_BRAKE1
7	PA.11 / ACMP0_P0 / EBI_nRD / USCI0_CLK / BPWM0_CH0 / TM0_EXT
8	PA.10 / ACMP1_P0 / EBI_nWR / USCI0_DAT0 / BPWM0_CH1 / TM1_EXT
9	PA.9 / EBI_MCLK / USCI0_DAT1 / UART1_TXD / BPWM0_CH2 / TM2_EXT
10	PA.8 / EBI_ALE / USCI0_CTL1 / UART1_RXD / BPWM0_CH3 / TM3_EXT / INT4
11	PF.5 / UART2_RXD / UART2_nCTS / PWM0_CH0 / BPWM0_CH4 / X32_IN / ADC0_ST
12	PF.4 / UART2_TXD / UART2_nRTS / PWM0_CH1 / BPWM0_CH5 / X32_OUT
13	PF.3 / EBI_nCS0 / UART0_TXD / I2C0_SCL / XT1_IN / BPWM1_CH0
14	PF.2 / EBI_nCS1 / UART0_RXD / I2C0_SDA / QSPI0_CLK / XT1_OUT / BPWM1_CH1
15	PA.7 / EBI_AD7 / UART0_TXD / I2C1_SCL / PWM1_CH4 / BPWM1_CH2 / ACMP0_WLAT / TM2 / INT1
16	PA.6 / EBI_AD6 / UART0_RXD / I2C1_SDA / PWM1_CH5 / BPWM1_CH3 / ACMP1_WLAT / TM3 / INT0
17	PA.5 / QSPI0_MISO1 / UART0_nCTS / UART0_TXD / I2C0_SCL / UART5_TXD / BPWM0_CH5 / PWM0_CH0
18	PA.4 / QSPI0_MOSI1 / SPI0_I2SMCLK / UART0_nRTS / UART0_RXD / I2C0_SDA / UART5_RXD / BPWM0_CH4 / PWM0_CH1
19	PA.3 / QSPI0_SS / SPI0_SS / UART4_TXD / I2C0_SMBAL / UART1_TXD / I2C1_SCL / BPWM0_CH3 / PWM0_CH2 / CLKO / PWM1_BRAKE1
20	PA.2 / QSPI0_CLK / SPI0_CLK / UART4_RXD / I2C0_SMBSUS / UART1_RXD / I2C1_SDA / BPWM0_CH2 / PWM0_CH3
21	PA.1 / QSPI0_MISO0 / SPI0_MISO / UART0_TXD / UART1_nCTS / BPWM0_CH1 / PWM0_CH4
22	PA.0 / QSPI0_MOSI0 / SPI0_MOSI / UART0_RXD / UART1_nRTS / BPWM0_CH0 / PWM0_CH5
23	PF.15 / PWM0_BRAKE0 / PWM0_CH1 / TM2 / CLKO / INT4
24	nRESET
25	PF.0 / UART1_TXD / I2C1_SCL / UART0_TXD / BPWM1_CH0 / ICE_DAT
26	PF.1 / UART1_RXD / I2C1_SDA / UART0_RXD / BPWM1_CH1 / ICE_CLK
27	PC.5 / EBI_AD5 / QSPI0_MISO1 / UART2_TXD / I2C1_SCL / UART4_TXD / PWM1_CH0
28	PC.4 / EBI_AD4 / QSPI0_MOSI1 / UART2_RXD / I2C1_SDA / UART4_RXD / PWM1_CH1
29	PC.3 / EBI_AD3 / QSPI0_SS / UART2_nRTS / I2C0_SMBAL / UART3_TXD / PWM1_CH2
30	PC.2 / EBI_AD2 / QSPI0_CLK / UART2_nCTS / I2C0_SMBSUS / UART3_RXD / PWM1_CH3
31	PC.1 / EBI_AD1 / QSPI0_MISO0 / UART2_TXD / I2C0_SCL / PWM1_CH4 / ACMP0_O / ADC0_ST
32	PC.0 / EBI_AD0 / QSPI0_MOSI0 / UART2_RXD / I2C0_SDA / PWM1_CH5 / ACMP1_O
33	PA.12 / UART4_TXD / I2C1_SCL / BPWM1_CH2
34	PA.13 / UART4_RXD / I2C1_SDA / BPWM1_CH3
35	PA.14 / UART0_TXD / BPWM1_CH4
36	PA.15 / UART0_RXD / BPWM1_CH5

Pin	M031LG6AE Pin Function
37	VSS
38	LDO_CAP
39	V_{DD}
40	PC.14 / EBI_AD11 / SPI0_I2SMCLK / USCI0_CTL0 / QSPI0_CLK / TM1
41	PB.15 / ADC0_CH15 / EBI_AD12 / SPI0_SS / USCI0_CTL1 / UART0_nCTS / UART3_TXD / PWM1_CH0 / TM0_EXT / PWM0_BRAKE1
42	PB.14 / ADC0_CH14 / EBI_AD13 / SPI0_CLK / USCI0_DAT1 / UART0_nRTS / UART3_RXD / PWM1_CH1 / TM1_EXT / CLKO
43	PB.13 / ADC0_CH13 / ACMP0_P3 / ACMP1_P3 / EBI_AD14 / SPI0_MISO / USCI0_DAT0 / UART0_TXD / UART3_nRTS / PWM1_CH2 / TM2_EXT
44	PB.12 / ADC0_CH12 / ACMP0_P2 / ACMP1_P2 / EBI_AD15 / SPI0_MOSI / USCI0_CLK / UART0_RXD / UART3_nCTS / PWM1_CH3 / TM3_EXT
45	AV_{DD}
46	AVSS
47	PB.7 / ADC0_CH7 / EBI_nWRL / USCI1_DAT0 / UART1_TXD / EBI_nCS0 / BPWM1_CH4 / PWM1_BRAKE0 / PWM1_CH4 / INT5 / ACMP0_O
48	PB.6 / ADC0_CH6 / EBI_nWRH / USCI1_DAT1 / UART1_RXD / EBI_nCS1 / BPWM1_CH5 / PWM1_BRAKE1 / PWM1_CH5 / INT4 / ACMP1_O

Table 4.1-12 M031LG6AE Multi-function Pin Table

M031LG8AE

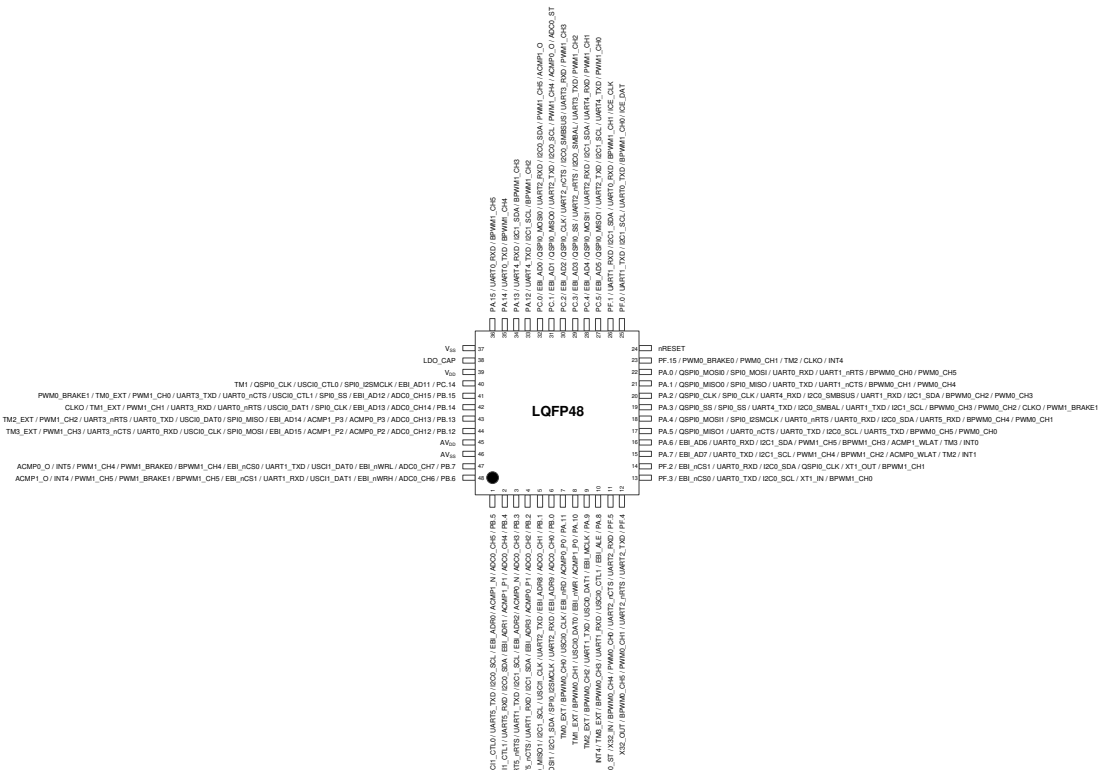

Figure 4.1-19 M031LG8AE Multi-function Pin Diagram

Pin	M031LG8AE Pin Function
1	PB.5 / ADC0_CH5 / ACMP1_N / EBI_ADR0 / I2C0_SCL / UART5_TXD / USCI1_CTL0 / PWM0_CH0 / UART2_TXD / TM0 / INT0
2	PB.4 / ADC0_CH4 / ACMP1_P1 / EBI_ADR1 / I2C0_SDA / UART5_RXD / USCI1_CTL1 / PWM0_CH1 / UART2_RXD / TM1 / INT1
3	PB.3 / ADC0_CH3 / ACMP0_N / EBI_ADR2 / I2C1_SCL / UART1_TXD / UART5_nRTS / USCI1_DAT1 / PWM0_CH2 / PWM0_BRAKE0 / TM2 / INT2
4	PB.2 / ADC0_CH2 / ACMP0_P1 / EBI_ADR3 / I2C1_SDA / UART1_RXD / UART5_nCTS / USCI1_DAT0 / PWM0_CH3 / TM3 / INT3

Pin	M031LG8AE Pin Function
5	PB.1 / ADC0_CH1 / EBI_ADR8 / UART2_TXD / USCI1_CLK / I2C1_SCL / QSPI0_MISO1 / PWM0_CH4 / PWM1_CH4 / PWM0_BRAKE0
6	PB.0 / ADC0_CH0 / EBI_ADR9 / UART2_RXD / SPI0_I2SMCLK / I2C1_SDA / QSPI0_MOSI1 / PWM0_CH5 / PWM1_CH5 / PWM0_BRAKE1
7	PA.11 / ACMP0_P0 / EBI_nRD / USCI0_CLK / BPWM0_CH0 / TM0_EXT
8	PA.10 / ACMP1_P0 / EBI_nWR / USCI0_DAT0 / BPWM0_CH1 / TM1_EXT
9	PA.9 / EBI_MCLK / USCI0_DAT1 / UART1_TXD / BPWM0_CH2 / TM2_EXT
10	PA.8 / EBI_ALE / USCI0_CTL1 / UART1_RXD / BPWM0_CH3 / TM3_EXT / INT4
11	PF.5 / UART2_RXD / UART2_nCTS / PWM0_CH0 / BPWM0_CH4 / X32_IN / ADC0_ST
12	PF.4 / UART2_TXD / UART2_nRTS / PWM0_CH1 / BPWM0_CH5 / X32_OUT
13	PF.3 / EBI_nCS0 / UART0_TXD / I2C0_SCL / XT1_IN / BPWM1_CH0
14	PF.2 / EBI_nCS1 / UART0_RXD / I2C0_SDA / QSPI0_CLK / XT1_OUT / BPWM1_CH1
15	PA.7 / EBI_AD7 / UART0_TXD / I2C1_SCL / PWM1_CH4 / BPWM1_CH2 / ACMP0_WLAT / TM2 / INT1
16	PA.6 / EBI_AD6 / UART0_RXD / I2C1_SDA / PWM1_CH5 / BPWM1_CH3 / ACMP1_WLAT / TM3 / INT0
17	PA.5 / QSPI0_MISO1 / UART0_nCTS / UART0_TXD / I2C0_SCL / UART5_TXD / BPWM0_CH5 / PWM0_CH0
18	PA.4 / QSPI0_MOSI1 / SPI0_I2SMCLK / UART0_nRTS / UART0_RXD / I2C0_SDA / UART5_RXD / BPWM0_CH4 / PWM0_CH1
19	PA.3 / QSPI0_SS / SPI0_SS / UART4_TXD / I2C0_SMBAL / UART1_TXD / I2C1_SCL / BPWM0_CH3 / PWM0_CH2 / CLKO / PWM1_BRAKE1
20	PA.2 / QSPI0_CLK / SPI0_CLK / UART4_RXD / I2C0_SMBSUS / UART1_RXD / I2C1_SDA / BPWM0_CH2 / PWM0_CH3
21	PA.1 / QSPI0_MISO0 / SPI0_MISO / UART0_TXD / UART1_nCTS / BPWM0_CH1 / PWM0_CH4
22	PA.0 / QSPI0_MOSI0 / SPI0_MOSI / UART0_RXD / UART1_nRTS / BPWM0_CH0 / PWM0_CH5
23	PF.15 / PWM0_BRAKE0 / PWM0_CH1 / TM2 / CLKO / INT4
24	nRESET
25	PF.0 / UART1_TXD / I2C1_SCL / UART0_TXD / BPWM1_CH0 / ICE_DAT
26	PF.1 / UART1_RXD / I2C1_SDA / UART0_RXD / BPWM1_CH1 / ICE_CLK
27	PC.5 / EBI_AD5 / QSPI0_MISO1 / UART2_TXD / I2C1_SCL / UART4_TXD / PWM1_CH0
28	PC.4 / EBI_AD4 / QSPI0_MOSI1 / UART2_RXD / I2C1_SDA / UART4_RXD / PWM1_CH1
29	PC.3 / EBI_AD3 / QSPI0_SS / UART2_nRTS / I2C0_SMBAL / UART3_TXD / PWM1_CH2
30	PC.2 / EBI_AD2 / QSPI0_CLK / UART2_nCTS / I2C0_SMBSUS / UART3_RXD / PWM1_CH3
31	PC.1 / EBI_AD1 / QSPI0_MISO0 / UART2_TXD / I2C0_SCL / PWM1_CH4 / ACMP0_O / ADC0_ST
32	PC.0 / EBI_AD0 / QSPI0_MOSI0 / UART2_RXD / I2C0_SDA / PWM1_CH5 / ACMP1_O
33	PA.12 / UART4_TXD / I2C1_SCL / BPWM1_CH2
34	PA.13 / UART4_RXD / I2C1_SDA / BPWM1_CH3
35	PA.14 / UART0_TXD / BPWM1_CH4
36	PA.15 / UART0_RXD / BPWM1_CH5

Pin	M031LG8AE Pin Function
37	VSS
38	LDO_CAP
39	V_{DD}
40	PC.14 / EBI_AD11 / SPI0_I2SMCLK / USCI0_CTL0 / QSPI0_CLK / TM1
41	PB.15 / ADC0_CH15 / EBI_AD12 / SPI0_SS / USCI0_CTL1 / UART0_nCTS / UART3_TXD / PWM1_CH0 / TM0_EXT / PWM0_BRAKE1
42	PB.14 / ADC0_CH14 / EBI_AD13 / SPI0_CLK / USCI0_DAT1 / UART0_nRTS / UART3_RXD / PWM1_CH1 / TM1_EXT / CLKO
43	PB.13 / ADC0_CH13 / ACMP0_P3 / ACMP1_P3 / EBI_AD14 / SPI0_MISO / USCI0_DAT0 / UART0_TXD / UART3_nRTS / PWM1_CH2 / TM2_EXT
44	PB.12 / ADC0_CH12 / ACMP0_P2 / ACMP1_P2 / EBI_AD15 / SPI0_MOSI / USCI0_CLK / UART0_RXD / UART3_nCTS / PWM1_CH3 / TM3_EXT
45	AV_{DD}
46	AVSS
47	PB.7 / ADC0_CH7 / EBI_nWRL / USCI1_DAT0 / UART1_TXD / EBI_nCS0 / BPWM1_CH4 / PWM1_BRAKE0 / PWM1_CH4 / INT5 / ACMP0_O
48	PB.6 / ADC0_CH6 / EBI_nWRH / USCI1_DAT1 / UART1_RXD / EBI_nCS1 / BPWM1_CH5 / PWM1_BRAKE1 / PWM1_CH5 / INT4 / ACMP1_O

Table 4.1-13 M031LG8AE Multi-function Pin Table

4.1.2.5 M031 Series LQFP 64-Pin Multi-function Pin Diagram

Corresponding Part Number: M031SC2AE, M031SD2AE, M031SE3AE, M031SG6AE, M031SG8AE, M031SIAAE

M031SC2AE

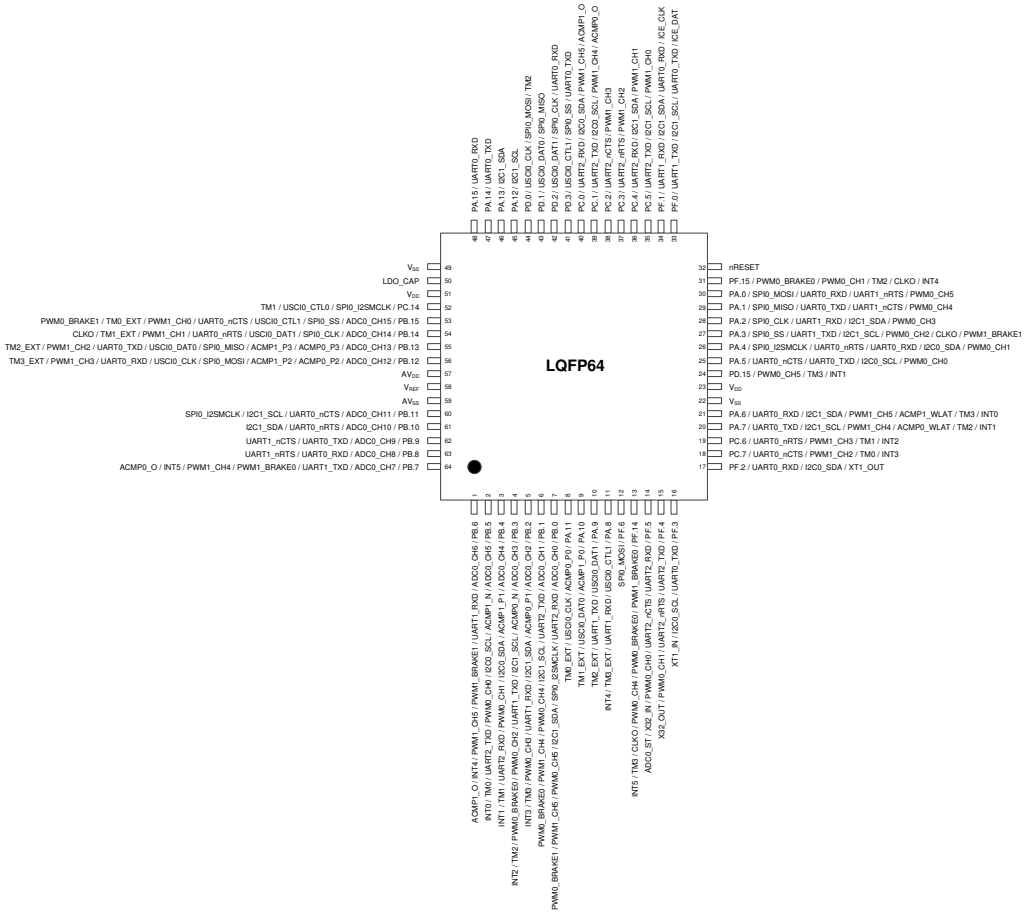

Figure 4.1-20 M031SC2AE Multi-function Pin Diagram

Pin	M031SC2AE Pin Function
1	PB.6 / ADC0_CH6 / UART1_RXD / PWM1_BRAKE1 / PWM1_CH5 / INT4 / ACMP1_O
2	PB.5 / ADC0_CH5 / ACMP1_N / I2C0_SCL / PWM0_CH0 / UART2_TXD / TM0 / INT0
3	PB.4 / ADC0_CH4 / ACMP1_P1 / I2C0_SDA / PWM0_CH1 / UART2_RXD / TM1 / INT1

Pin	M031SC2AE Pin Function
4	PB.3 / ADC0_CH3 / ACMP0_N / I2C1_SCL / UART1_TXD / PWM0_CH2 / PWM0_BRAKE0 / TM2 / INT2
5	PB.2 / ADC0_CH2 / ACMP0_P1 / I2C1_SDA / UART1_RXD / PWM0_CH3 / TM3 / INT3
6	PB.1 / ADC0_CH1 / UART2_TXD / I2C1_SCL / PWM0_CH4 / PWM1_CH4 / PWM0_BRAKE0
7	PB.0 / ADC0_CH0 / UART2_RXD / SPI0_I2SMCLK / I2C1_SDA / PWM0_CH5 / PWM1_CH5 / PWM0_BRAKE1
8	PA.11 / ACMP0_P0 / USCI0_CLK / TM0_EXT
9	PA.10 / ACMP1_P0 / USCI0_DAT0 / TM1_EXT
10	PA.9 / USCI0_DAT1 / UART1_TXD / TM2_EXT
11	PA.8 / USCI0_CTL1 / UART1_RXD / TM3_EXT / INT4
12	PF.6 / SPI0_MOSI
13	PF.14 / PWM1_BRAKE0 / PWM0_BRAKE0 / PWM0_CH4 / CLKO / TM3 / INT5
14	PF.5 / UART2_RXD / UART2_nCTS / PWM0_CH0 / X32_IN / ADC0_ST
15	PF.4 / UART2_TXD / UART2_nRTS / PWM0_CH1 / X32_OUT
16	PF.3 / UART0_TXD / I2C0_SCL / XT1_IN
17	PF.2 / UART0_RXD / I2C0_SDA / XT1_OUT
18	PC.7 / UART0_nCTS / PWM1_CH2 / TM0 / INT3
19	PC.6 / UART0_nRTS / PWM1_CH3 / TM1 / INT2
20	PA.7 / UART0_TXD / I2C1_SCL / PWM1_CH4 / ACMP0_WLAT / TM2 / INT1
21	PA.6 / UART0_RXD / I2C1_SDA / PWM1_CH5 / ACMP1_WLAT / TM3 / INT0
22	VSS
23	V_{DD}
24	PD.15 / PWM0_CH5 / TM3 / INT1
25	PA.5 / UART0_nCTS / UART0_TXD / I2C0_SCL / PWM0_CH0
26	PA.4 / SPI0_I2SMCLK / UART0_nRTS / UART0_RXD / I2C0_SDA / PWM0_CH1
27	PA.3 / SPI0_SS / UART1_TXD / I2C1_SCL / PWM0_CH2 / CLKO / PWM1_BRAKE1
28	PA.2 / SPI0_CLK / UART1_RXD / I2C1_SDA / PWM0_CH3
29	PA.1 / SPI0_MISO / UART0_TXD / UART1_nCTS / PWM0_CH4
30	PA.0 / SPI0_MOSI / UART0_RXD / UART1_nRTS / PWM0_CH5
31	PF.15 / PWM0_BRAKE0 / PWM0_CH1 / TM2 / CLKO / INT4
32	nRESET
33	PF.0 / UART1_TXD / I2C1_SCL / UART0_TXD / ICE_DAT
34	PF.1 / UART1_RXD / I2C1_SDA / UART0_RXD / ICE_CLK
35	PC.5 / UART2_TXD / I2C1_SCL / PWM1_CH0
36	PC.4 / UART2_RXD / I2C1_SDA / PWM1_CH1
37	PC.3 / UART2_nRTS / PWM1_CH2

Pin	M031SC2AE Pin Function
38	PC.2 / UART2_nCTS / PWM1_CH3
39	PC.1 / UART2_TXD / I2C0_SCL / PWM1_CH4 / ACMP0_O
40	PC.0 / UART2_RXD / I2C0_SDA / PWM1_CH5 / ACMP1_O
41	PD.3 / USCI0_CTL1 / SPI0_SS / UART0_TXD
42	PD.2 / USCI0_DAT1 / SPI0_CLK / UART0_RXD
43	PD.1 / USCI0_DAT0 / SPI0_MISO
44	PD.0 / USCI0_CLK / SPI0_MOSI / TM2
45	PA.12 / I2C1_SCL
46	PA.13 / I2C1_SDA
47	PA.14 / UART0_TXD
48	PA.15 / UART0_RXD
49	VSS
50	LDO_CAP
51	V_{DD}
52	PC.14 / SPI0_I2SMCLK / USCI0_CTL0 / TM1
53	PB.15 / ADC0_CH15 / SPI0_SS / USCI0_CTL1 / UART0_nCTS / PWM1_CH0 / TM0_EXT / PWM0_BRAKE1
54	PB.14 / ADC0_CH14 / SPI0_CLK / USCI0_DAT1 / UART0_nRTS / PWM1_CH1 / TM1_EXT / CLKO
55	PB.13 / ADC0_CH13 / ACMP0_P3 / ACMP1_P3 / SPI0_MISO / USCI0_DAT0 / UART0_TXD / PWM1_CH2 / TM2_EXT
56	PB.12 / ADC0_CH12 / ACMP0_P2 / ACMP1_P2 / SPI0_MOSI / USCI0_CLK / UART0_RXD / PWM1_CH3 / TM3_EXT
57	AV_{DD}
58	V_{REF}
59	AVSS
60	PB.11 / ADC0_CH11 / UART0_nCTS / I2C1_SCL / SPI0_I2SMCLK
61	PB.10 / ADC0_CH10 / UART0_nRTS / I2C1_SDA
62	PB.9 / ADC0_CH9 / UART0_TXD / UART1_nCTS
63	PB.8 / ADC0_CH8 / UART0_RXD / UART1_nRTS
64	PB.7 / ADC0_CH7 / UART1_TXD / PWM1_BRAKE0 / PWM1_CH4 / INT5 / ACMP0_O

Table 4.1-14 M031SC2AE Multi-function Pin Table

M031SD2AE

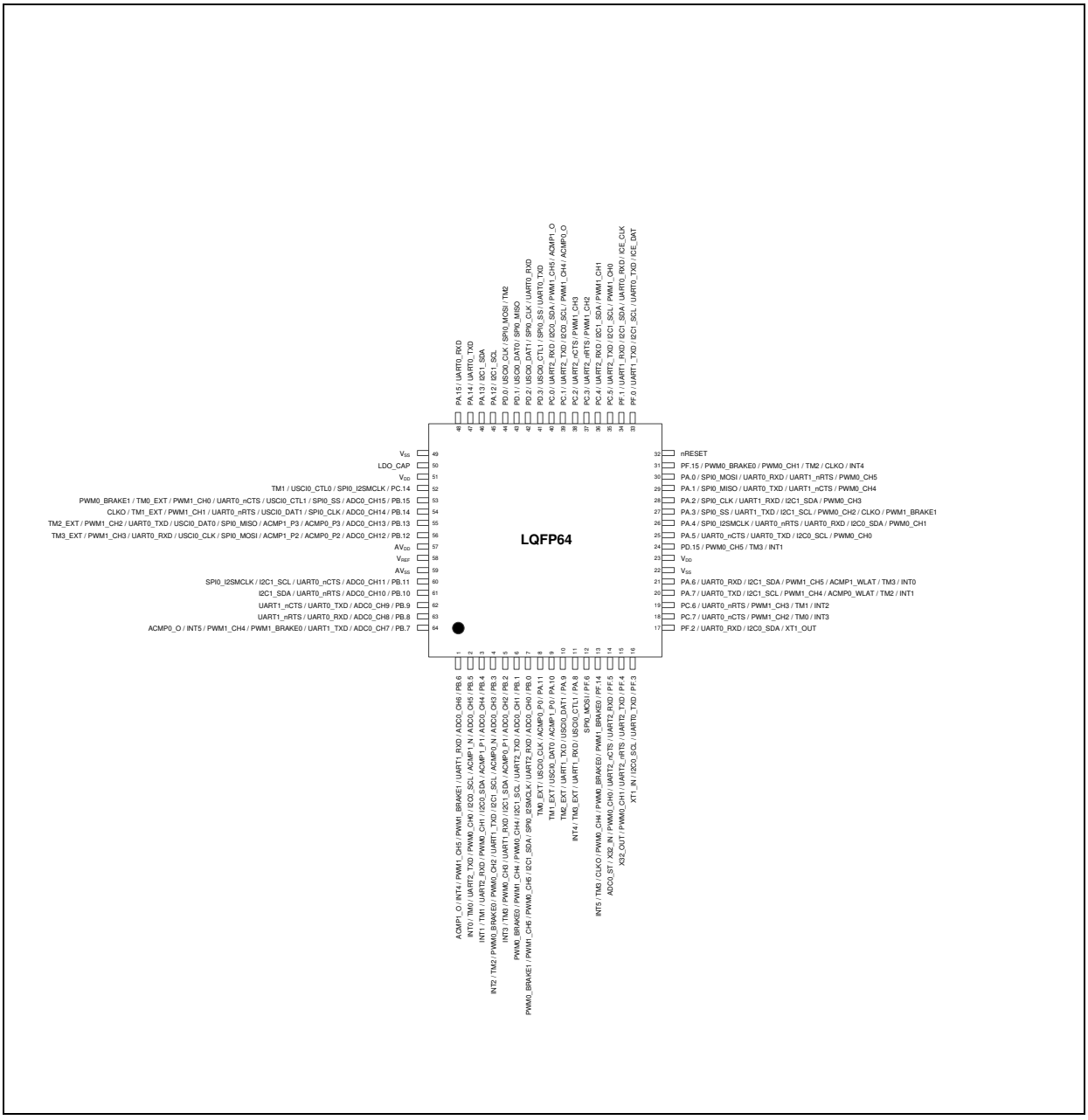

Figure 4.1-21 M031SD2AE Multi-function Pin Diagram

Pin	M031SD2AE Pin Function
1	PB.6 / ADC0_CH6 / UART1_RXD / PWM1_BRAKE1 / PWM1_CH5 / INT4 / ACMP1_O
2	PB.5 / ADC0_CH5 / ACMP1_N / I2C0_SCL / PWM0_CH0 / UART2_TXD / TM0 / INT0
3	PB.4 / ADC0_CH4 / ACMP1_P1 / I2C0_SDA / PWM0_CH1 / UART2_RXD / TM1 / INT1
4	PB.3 / ADC0_CH3 / ACMP0_N / I2C1_SCL / UART1_TXD / PWM0_CH2 / PWM0_BRAKE0 / TM2 / INT2
5	PB.2 / ADC0_CH2 / ACMP0_P1 / I2C1_SDA / UART1_RXD / PWM0_CH3 / TM3 / INT3

Pin	M031SD2AE Pin Function
6	PB.1 / ADC0_CH1 / UART2_TXD / I2C1_SCL / PWM0_CH4 / PWM1_CH4 / PWM0_BRAKE0
7	PB.0 / ADC0_CH0 / UART2_RXD / SPI0_I2SMCLK / I2C1_SDA / PWM0_CH5 / PWM1_CH5 / PWM0_BRAKE1
8	PA.11 / ACMP0_P0 / USCI0_CLK / TM0_EXT
9	PA.10 / ACMP1_P0 / USCI0_DAT0 / TM1_EXT
10	PA.9 / USCI0_DAT1 / UART1_TXD / TM2_EXT
11	PA.8 / USCI0_CTL1 / UART1_RXD / TM3_EXT / INT4
12	PF.6 / SPI0_MOSI
13	PF.14 / PWM1_BRAKE0 / PWM0_BRAKE0 / PWM0_CH4 / CLKO / TM3 / INT5
14	PF.5 / UART2_RXD / UART2_nCTS / PWM0_CH0 / X32_IN / ADC0_ST
15	PF.4 / UART2_TXD / UART2_nRTS / PWM0_CH1 / X32_OUT
16	PF.3 / UART0_TXD / I2C0_SCL / XT1_IN
17	PF.2 / UART0_RXD / I2C0_SDA / XT1_OUT
18	PC.7 / UART0_nCTS / PWM1_CH2 / TM0 / INT3
19	PC.6 / UART0_nRTS / PWM1_CH3 / TM1 / INT2
20	PA.7 / UART0_TXD / I2C1_SCL / PWM1_CH4 / ACMP0_WLAT / TM2 / INT1
21	PA.6 / UART0_RXD / I2C1_SDA / PWM1_CH5 / ACMP1_WLAT / TM3 / INT0
22	VSS
23	V_{DD}
24	PD.15 / PWM0_CH5 / TM3 / INT1
25	PA.5 / UART0_nCTS / UART0_TXD / I2C0_SCL / PWM0_CH0
26	PA.4 / SPI0_I2SMCLK / UART0_nRTS / UART0_RXD / I2C0_SDA / PWM0_CH1
27	PA.3 / SPI0_SS / UART1_TXD / I2C1_SCL / PWM0_CH2 / CLKO / PWM1_BRAKE1
28	PA.2 / SPI0_CLK / UART1_RXD / I2C1_SDA / PWM0_CH3
29	PA.1 / SPI0_MISO / UART0_TXD / UART1_nCTS / PWM0_CH4
30	PA.0 / SPI0_MOSI / UART0_RXD / UART1_nRTS / PWM0_CH5
31	PF.15 / PWM0_BRAKE0 / PWM0_CH1 / TM2 / CLKO / INT4
32	nRESET
33	PF.0 / UART1_TXD / I2C1_SCL / UART0_TXD / ICE_DAT
34	PF.1 / UART1_RXD / I2C1_SDA / UART0_RXD / ICE_CLK
35	PC.5 / UART2_TXD / I2C1_SCL / PWM1_CH0
36	PC.4 / UART2_RXD / I2C1_SDA / PWM1_CH1
37	PC.3 / UART2_nRTS / PWM1_CH2
38	PC.2 / UART2_nCTS / PWM1_CH3
39	PC.1 / UART2_TXD / I2C0_SCL / PWM1_CH4 / ACMP0_O

Pin	M031SD2AE Pin Function
40	PC.0 / UART2_RXD / I2C0_SDA / PWM1_CH5 / ACMP1_O
41	PD.3 / USCI0_CTL1 / SPI0_SS / UART0_TXD
42	PD.2 / USCI0_DAT1 / SPI0_CLK / UART0_RXD
43	PD.1 / USCI0_DAT0 / SPI0_MISO
44	PD.0 / USCI0_CLK / SPI0_MOSI / TM2
45	PA.12 / I2C1_SCL
46	PA.13 / I2C1_SDA
47	PA.14 / UART0_TXD
48	PA.15 / UART0_RXD
49	VSS
50	LDO_CAP
51	V_{DD}
52	PC.14 / SPI0_I2SMCLK / USCI0_CTL0 / TM1
53	PB.15 / ADC0_CH15 / SPI0_SS / USCI0_CTL1 / UART0_nCTS / PWM1_CH0 / TM0_EXT / PWM0_BRAKE1
54	PB.14 / ADC0_CH14 / SPI0_CLK / USCI0_DAT1 / UART0_nRTS / PWM1_CH1 / TM1_EXT / CLKO
55	PB.13 / ADC0_CH13 / ACMP0_P3 / ACMP1_P3 / SPI0_MISO / USCI0_DAT0 / UART0_TXD / PWM1_CH2 / TM2_EXT
56	PB.12 / ADC0_CH12 / ACMP0_P2 / ACMP1_P2 / SPI0_MOSI / USCI0_CLK / UART0_RXD / PWM1_CH3 / TM3_EXT
57	AV_{DD}
58	V_{REF}
59	AVSS
60	PB.11 / ADC0_CH11 / UART0_nCTS / I2C1_SCL / SPI0_I2SMCLK
61	PB.10 / ADC0_CH10 / UART0_nRTS / I2C1_SDA
62	PB.9 / ADC0_CH9 / UART0_TXD / UART1_nCTS
63	PB.8 / ADC0_CH8 / UART0_RXD / UART1_nRTS
64	PB.7 / ADC0_CH7 / UART1_TXD / PWM1_BRAKE0 / PWM1_CH4 / INT5 / ACMP0_O

Table 4.1-15 M031SD2AE Multi-function Pin Table

M031SE3AE

Figure 4.1-22 M031SE3AE Multi-function Pin Diagram

Pin	M031SE3AE Pin Function
1	PB.6 / ADC0_CH6 / EBI_nWRH / UART1_RXD / EBI_nCS1 / PWM1_BRAKE1 / PWM1_CH5 / INT4 / ACMP1_O
2	PB.5 / ADC0_CH5 / ACMP1_N / I2C0_SCL / PWM0_CH0 / UART2_TXD / TM0 / INT0
3	PB.4 / ADC0_CH4 / ACMP1_P1 / I2C0_SDA / PWM0_CH1 / UART2_RXD / TM1 / INT1
4	PB.3 / ADC0_CH3 / ACMP0_N / I2C1_SCL / UART1_TXD / PWM0_CH2 / PWM0_BRAKE0 / TM2 / INT2
5	PB.2 / ADC0_CH2 / ACMP0_P1 / I2C1_SDA / UART1_RXD / PWM0_CH3 / TM3 / INT3
6	PB.1 / ADC0_CH1 / UART2_TXD / I2C1_SCL / PWM0_CH4 / PWM1_CH4 / PWM0_BRAKE0

Pin	M031SE3AE Pin Function
7	PB.0 / ADC0_CH0 / UART2_RXD / SPI0_I2SMCLK / I2C1_SDA / PWM0_CH5 / PWM1_CH5 / PWM0_BRAKE1
8	PA.11 / ACMP0_P0 / EBI_nRD / USCI0_CLK / TM0_EXT
9	PA.10 / ACMP1_P0 / EBI_nWR / USCI0_DAT0 / TM1_EXT
10	PA.9 / EBI_MCLK / USCI0_DAT1 / UART1_TXD / TM2_EXT
11	PA.8 / EBI_ALE / USCI0_CTL1 / UART1_RXD / TM3_EXT / INT4
12	PF.6 / EBI_ADR19 / SPI0_MOSI / EBI_nCS0
13	PF.14 / PWM1_BRAKE0 / PWM0_BRAKE0 / PWM0_CH4 / CLKO / TM3 / INT5
14	PF.5 / UART2_RXD / UART2_nCTS / PWM0_CH0 / X32_IN / ADC0_ST
15	PF.4 / UART2_TXD / UART2_nRTS / PWM0_CH1 / X32_OUT
16	PF.3 / EBI_nCS0 / UART0_TXD / I2C0_SCL / XT1_IN
17	PF.2 / EBI_nCS1 / UART0_RXD / I2C0_SDA / XT1_OUT
18	PC.7 / EBI_AD9 / UART0_nCTS / PWM1_CH2 / TM0 / INT3
19	PC.6 / EBI_AD8 / UART0_nRTS / PWM1_CH3 / TM1 / INT2
20	PA.7 / EBI_AD7 / UART0_TXD / I2C1_SCL / PWM1_CH4 / ACMP0_WLAT / TM2 / INT1
21	PA.6 / EBI_AD6 / UART0_RXD / I2C1_SDA / PWM1_CH5 / ACMP1_WLAT / TM3 / INT0
22	VSS
23	V_{DD}
24	PD.15 / PWM0_CH5 / TM3 / INT1
25	PA.5 / UART0_nCTS / UART0_TXD / I2C0_SCL / PWM0_CH0
26	PA.4 / SPI0_I2SMCLK / UART0_nRTS / UART0_RXD / I2C0_SDA / PWM0_CH1
27	PA.3 / SPI0_SS / UART1_TXD / I2C1_SCL / PWM0_CH2 / CLKO / PWM1_BRAKE1
28	PA.2 / SPI0_CLK / UART1_RXD / I2C1_SDA / PWM0_CH3
29	PA.1 / SPI0_MISO / UART0_TXD / UART1_nCTS / PWM0_CH4
30	PA.0 / SPI0_MOSI / UART0_RXD / UART1_nRTS / PWM0_CH5
31	PF.15 / PWM0_BRAKE0 / PWM0_CH1 / TM2 / CLKO / INT4
32	nRESET
33	PF.0 / UART1_TXD / I2C1_SCL / UART0_TXD / ICE_DAT
34	PF.1 / UART1_RXD / I2C1_SDA / UART0_RXD / ICE_CLK
35	PC.5 / EBI_AD5 / UART2_TXD / I2C1_SCL / PWM1_CH0
36	PC.4 / EBI_AD4 / UART2_RXD / I2C1_SDA / PWM1_CH1
37	PC.3 / EBI_AD3 / UART2_nRTS / PWM1_CH2
38	PC.2 / EBI_AD2 / UART2_nCTS / PWM1_CH3
39	PC.1 / EBI_AD1 / UART2_TXD / I2C0_SCL / PWM1_CH4 / ACMP0_O
40	PC.0 / EBI_AD0 / UART2_RXD / I2C0_SDA / PWM1_CH5 / ACMP1_O

Pin	M031SE3AE Pin Function
41	PD.3 / EBI_AD10 / USCI0_CTL1 / SPI0_SS / UART0_TXD
42	PD.2 / EBI_AD11 / USCI0_DAT1 / SPI0_CLK / UART0_RXD
43	PD.1 / EBI_AD12 / USCI0_DAT0 / SPI0_MISO
44	PD.0 / EBI_AD13 / USCI0_CLK / SPI0_MOSI / TM2
45	PA.12 / I2C1_SCL
46	PA.13 / I2C1_SDA
47	PA.14 / UART0_TXD
48	PA.15 / UART0_RXD
49	VSS
50	LDO_CAP
51	V_{DD}
52	PC.14 / EBI_AD11 / SPI0_I2SMCLK / USCI0_CTL0 / TM1
53	PB.15 / ADC0_CH15 / EBI_AD12 / SPI0_SS / USCI0_CTL1 / UART0_nCTS / PWM1_CH0 / TM0_EXT / PWM0_BRAKE1
54	PB.14 / ADC0_CH14 / EBI_AD13 / SPI0_CLK / USCI0_DAT1 / UART0_nRTS / PWM1_CH1 / TM1_EXT / CLKO
55	PB.13 / ADC0_CH13 / ACMP0_P3 / ACMP1_P3 / EBI_AD14 / SPI0_MISO / USCI0_DAT0 / UART0_TXD / PWM1_CH2 / TM2_EXT
56	PB.12 / ADC0_CH12 / ACMP0_P2 / ACMP1_P2 / EBI_AD15 / SPI0_MOSI / USCI0_CLK / UART0_RXD / PWM1_CH3 / TM3_EXT
57	AV_{DD}
58	V_{REF}
59	AVSS
60	PB.11 / ADC0_CH11 / EBI_ADR16 / UART0_nCTS / I2C1_SCL / SPI0_I2SMCLK
61	PB.10 / ADC0_CH10 / EBI_ADR17 / UART0_nRTS / I2C1_SDA
62	PB.9 / ADC0_CH9 / EBI_ADR18 / UART0_TXD / UART1_nCTS
63	PB.8 / ADC0_CH8 / EBI_ADR19 / UART0_RXD / UART1_nRTS
64	PB.7 / ADC0_CH7 / EBI_nWRL / UART1_TXD / EBI_nCS0 / PWM1_BRAKE0 / PWM1_CH4 / INT5 / ACMP0_O

Table 4.1-16 M031SE3AE Multi-function Pin Table

M031SG6AE

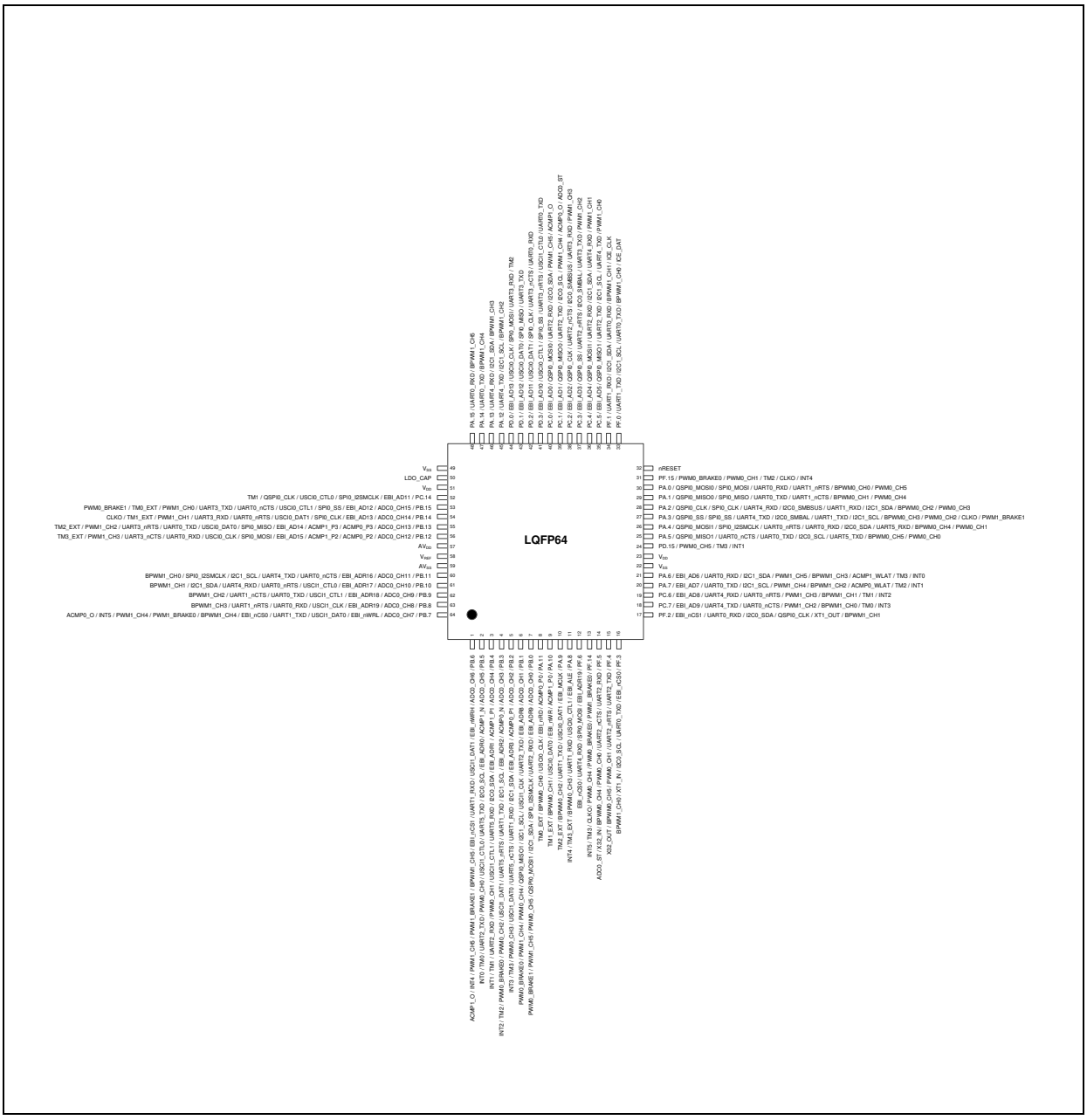

Figure 4.1-23 M031SG6AE Multi-function Pin Diagram

Pin	M031SG6AE Pin Function
1	PB.6 / ADC0_CH6 / EBI_nWRH / USCI1_DAT1 / UART1_RXD / EBI_nCS1 / BPWM1_CH5 / PWM1_BRAKE1 / PWM1_CH5 / INT4 / ACMP1_O
2	PB.5 / ADC0_CH5 / ACMP1_N / EBI_ADR0 / I2C0_SCL / UART5_TXD / USCI1_CTL0 / PWM0_CH0 / UART2_TXD / TM0 / INT0
3	PB.4 / ADC0_CH4 / ACMP1_P1 / EBI_ADR1 / I2C0_SDA / UART5_RXD / USCI1_CTL1 / PWM0_CH1 / UART2_RXD / TM1 / INT1

Pin	M031SG6AE Pin Function
4	PB.3 / ADC0_CH3 / ACMP0_N / EBI_ADR2 / I2C1_SCL / UART1_TXD / UART5_nRTS / USCI1_DAT1 / PWM0_CH2 / PWM0_BRAKE0 / TM2 / INT2
5	PB.2 / ADC0_CH2 / ACMP0_P1 / EBI_ADR3 / I2C1_SDA / UART1_RXD / UART5_nCTS / USCI1_DAT0 / PWM0_CH3 / TM3 / INT3
6	PB.1 / ADC0_CH1 / EBI_ADR8 / UART2_TXD / USCI1_CLK / I2C1_SCL / QSPI0_MISO1 / PWM0_CH4 / PWM1_CH4 / PWM0_BRAKE0
7	PB.0 / ADC0_CH0 / EBI_ADR9 / UART2_RXD / SPI0_I2SMCLK / I2C1_SDA / QSPI0_MOSI1 / PWM0_CH5 / PWM1_CH5 / PWM0_BRAKE1
8	PA.11 / ACMP0_P0 / EBI_nRD / USCI0_CLK / BPWM0_CH0 / TM0_EXT
9	PA.10 / ACMP1_P0 / EBI_nWR / USCI0_DAT0 / BPWM0_CH1 / TM1_EXT
10	PA.9 / EBI_MCLK / USCI0_DAT1 / UART1_TXD / BPWM0_CH2 / TM2_EXT
11	PA.8 / EBI_ALE / USCI0_CTL1 / UART1_RXD / BPWM0_CH3 / TM3_EXT / INT4
12	PF.6 / EBI_ADR19 / SPI0_MOSI / UART4_RXD / EBI_nCS0
13	PF.14 / PWM1_BRAKE0 / PWM0_BRAKE0 / PWM0_CH4 / CLKO / TM3 / INT5
14	PF.5 / UART2_RXD / UART2_nCTS / PWM0_CH0 / BPWM0_CH4 / X32_IN / ADC0_ST
15	PF.4 / UART2_TXD / UART2_nRTS / PWM0_CH1 / BPWM0_CH5 / X32_OUT
16	PF.3 / EBI_nCS0 / UART0_TXD / I2C0_SCL / XT1_IN / BPWM1_CH0
17	PF.2 / EBI_nCS1 / UART0_RXD / I2C0_SDA / QSPI0_CLK / XT1_OUT / BPWM1_CH1
18	PC.7 / EBI_AD9 / UART4_TXD / UART0_nCTS / PWM1_CH2 / BPWM1_CH0 / TM0 / INT3
19	PC.6 / EBI_AD8 / UART4_RXD / UART0_nRTS / PWM1_CH3 / BPWM1_CH1 / TM1 / INT2
20	PA.7 / EBI_AD7 / UART0_TXD / I2C1_SCL / PWM1_CH4 / BPWM1_CH2 / ACMP0_WLAT / TM2 / INT1
21	PA.6 / EBI_AD6 / UART0_RXD / I2C1_SDA / PWM1_CH5 / BPWM1_CH3 / ACMP1_WLAT / TM3 / INT0
22	VSS
23	V_{DD}
24	PD.15 / PWM0_CH5 / TM3 / INT1
25	PA.5 / QSPI0_MISO1 / UART0_nCTS / UART0_TXD / I2C0_SCL / UART5_TXD / BPWM0_CH5 / PWM0_CH0
26	PA.4 / QSPI0_MOSI1 / SPI0_I2SMCLK / UART0_nRTS / UART0_RXD / I2C0_SDA / UART5_RXD / BPWM0_CH4 / PWM0_CH1
27	PA.3 / QSPI0_SS / SPI0_SS / UART4_TXD / I2C0_SMBAL / UART1_TXD / I2C1_SCL / BPWM0_CH3 / PWM0_CH2 / CLKO / PWM1_BRAKE1
28	PA.2 / QSPI0_CLK / SPI0_CLK / UART4_RXD / I2C0_SMBSUS / UART1_RXD / I2C1_SDA / BPWM0_CH2 / PWM0_CH3
29	PA.1 / QSPI0_MISO0 / SPI0_MISO / UART0_TXD / UART1_nCTS / BPWM0_CH1 / PWM0_CH4
30	PA.0 / QSPI0_MOSI0 / SPI0_MOSI / UART0_RXD / UART1_nRTS / BPWM0_CH0 / PWM0_CH5
31	PF.15 / PWM0_BRAKE0 / PWM0_CH1 / TM2 / CLKO / INT4
32	nRESET
33	PF.0 / UART1_TXD / I2C1_SCL / UART0_TXD / BPWM1_CH0 / ICE_DAT
34	PF.1 / UART1_RXD / I2C1_SDA / UART0_RXD / BPWM1_CH1 / ICE_CLK

Pin	M031SG6AE Pin Function
35	PC.5 / EBI_AD5 / QSPI0_MISO1 / UART2_TXD / I2C1_SCL / UART4_TXD / PWM1_CH0
36	PC.4 / EBI_AD4 / QSPI0_MOSI1 / UART2_RXD / I2C1_SDA / UART4_RXD / PWM1_CH1
37	PC.3 / EBI_AD3 / QSPI0_SS / UART2_nRTS / I2C0_SMBAL / UART3_TXD / PWM1_CH2
38	PC.2 / EBI_AD2 / QSPI0_CLK / UART2_nCTS / I2C0_SMBSUS / UART3_RXD / PWM1_CH3
39	PC.1 / EBI_AD1 / QSPI0_MISO0 / UART2_TXD / I2C0_SCL / PWM1_CH4 / ACMP0_O / ADC0_ST
40	PC.0 / EBI_AD0 / QSPI0_MOSI0 / UART2_RXD / I2C0_SDA / PWM1_CH5 / ACMP1_O
41	PD.3 / EBI_AD10 / USCI0_CTL1 / SPI0_SS / UART3_nRTS / USCI1_CTL0 / UART0_TXD
42	PD.2 / EBI_AD11 / USCI0_DAT1 / SPI0_CLK / UART3_nCTS / UART0_RXD
43	PD.1 / EBI_AD12 / USCI0_DAT0 / SPI0_MISO / UART3_TXD
44	PD.0 / EBI_AD13 / USCI0_CLK / SPI0_MOSI / UART3_RXD / TM2
45	PA.12 / UART4_TXD / I2C1_SCL / BPWM1_CH2
46	PA.13 / UART4_RXD / I2C1_SDA / BPWM1_CH3
47	PA.14 / UART0_TXD / BPWM1_CH4
48	PA.15 / UART0_RXD / BPWM1_CH5
49	VSS
50	LDO_CAP
51	V_{DD}
52	PC.14 / EBI_AD11 / SPI0_I2SMCLK / USCI0_CTL0 / QSPI0_CLK / TM1
53	PB.15 / ADC0_CH15 / EBI_AD12 / SPI0_SS / USCI0_CTL1 / UART0_nCTS / UART3_TXD / PWM1_CH0 / TM0_EXT / PWM0_BRAKE1
54	PB.14 / ADC0_CH14 / EBI_AD13 / SPI0_CLK / USCI0_DAT1 / UART0_nRTS / UART3_RXD / PWM1_CH1 / TM1_EXT / CLKO
55	PB.13 / ADC0_CH13 / ACMP0_P3 / ACMP1_P3 / EBI_AD14 / SPI0_MISO / USCI0_DAT0 / UART0_TXD / UART3_nRTS / PWM1_CH2 / TM2_EXT
56	PB.12 / ADC0_CH12 / ACMP0_P2 / ACMP1_P2 / EBI_AD15 / SPI0_MOSI / USCI0_CLK / UART0_RXD / UART3_nCTS / PWM1_CH3 / TM3_EXT
57	AV_{DD}
58	V_{REF}
59	AVSS
60	PB.11 / ADC0_CH11 / EBI_ADR16 / UART0_nCTS / UART4_TXD / I2C1_SCL / SPI0_I2SMCLK / BPWM1_CH0
61	PB.10 / ADC0_CH10 / EBI_ADR17 / USCI1_CTL0 / UART0_nRTS / UART4_RXD / I2C1_SDA / BPWM1_CH1
62	PB.9 / ADC0_CH9 / EBI_ADR18 / USCI1_CTL1 / UART0_TXD / UART1_nCTS / BPWM1_CH2
63	PB.8 / ADC0_CH8 / EBI_ADR19 / USCI1_CLK / UART0_RXD / UART1_nRTS / BPWM1_CH3
64	PB.7 / ADC0_CH7 / EBI_nWRL / USCI1_DAT0 / UART1_TXD / EBI_nCS0 / BPWM1_CH4 / PWM1_BRAKE0 / PWM1_CH4 / INT5 / ACMP0_O

Table 4.1-17 M031SG6AE Multi-function Pin Table

M031SG8AE

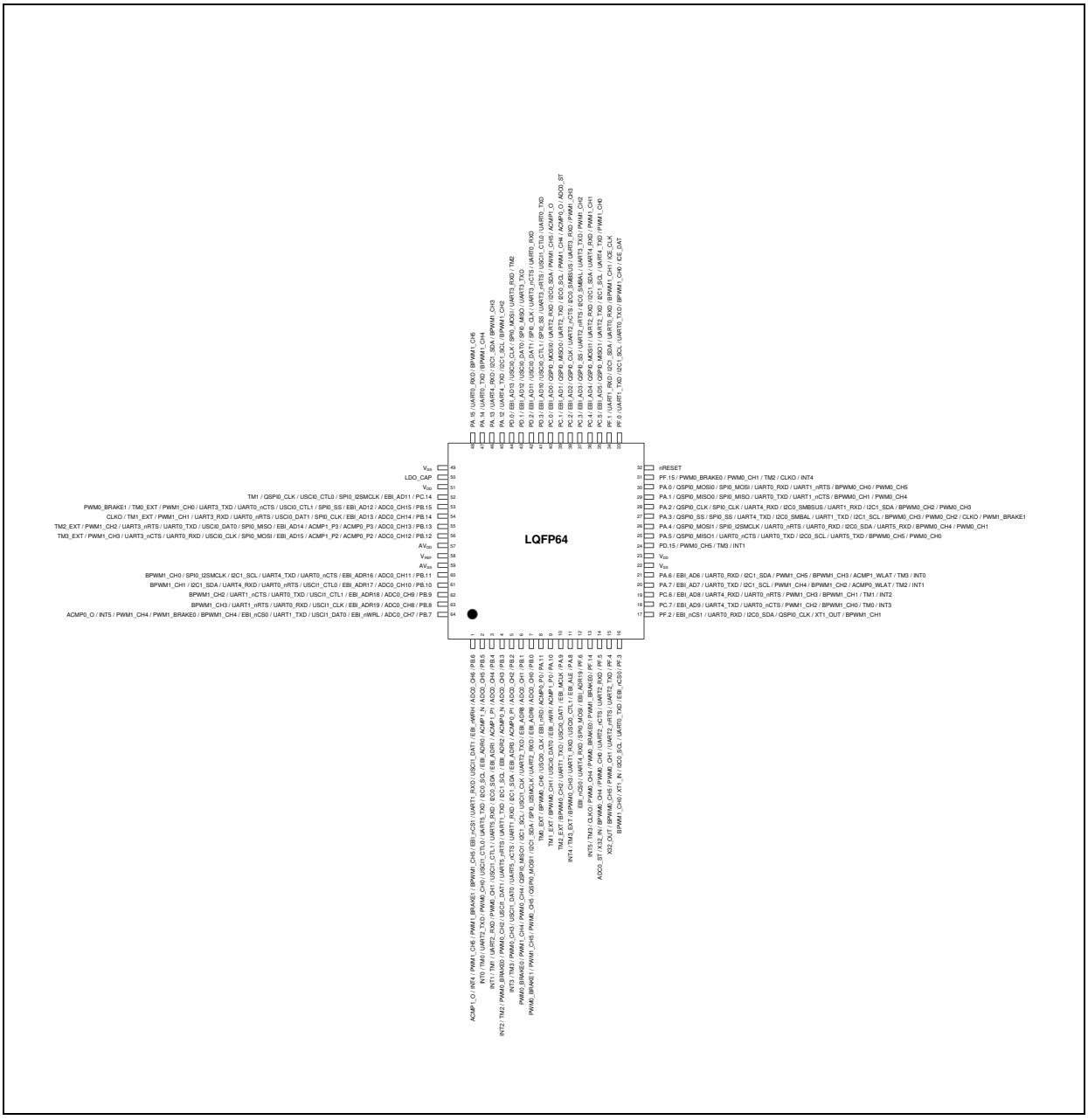

Figure 4.1-24 M031SG8AE Multi-function Pin Diagram

Pin	M031SG8AE Pin Function
1	PB.6 / ADC0_CH6 / EBI_nWRH / USCI1_DAT1 / UART1_RXD / EBI_nCS1 / BPWM1_CH5 / PWM1_BRAKE1 / PWM1_CH5 / INT4 / ACMP1_O
2	PB.5 / ADC0_CH5 / ACMP1_N / EBI_ADR0 / I2C0_SCL / UART5_TXD / USCI1_CTL0 / PWM0_CH0 / UART2_TXD / TM0 / INT0
3	PB.4 / ADC0_CH4 / ACMP1_P1 / EBI_ADR1 / I2C0_SDA / UART5_RXD / USCI1_CTL1 / PWM0_CH1 / UART2_RXD / TM1 / INT1

Pin	M031SG8AE Pin Function
4	PB.3 / ADC0_CH3 / ACMP0_N / EBI_ADR2 / I2C1_SCL / UART1_TXD / UART5_nRTS / USCI1_DAT1 / PWM0_CH2 / PWM0_BRAKE0 / TM2 / INT2
5	PB.2 / ADC0_CH2 / ACMP0_P1 / EBI_ADR3 / I2C1_SDA / UART1_RXD / UART5_nCTS / USCI1_DAT0 / PWM0_CH3 / TM3 / INT3
6	PB.1 / ADC0_CH1 / EBI_ADR8 / UART2_TXD / USCI1_CLK / I2C1_SCL / QSPI0_MISO1 / PWM0_CH4 / PWM1_CH4 / PWM0_BRAKE0
7	PB.0 / ADC0_CH0 / EBI_ADR9 / UART2_RXD / SPI0_I2SMCLK / I2C1_SDA / QSPI0_MOSI1 / PWM0_CH5 / PWM1_CH5 / PWM0_BRAKE1
8	PA.11 / ACMP0_P0 / EBI_nRD / USCI0_CLK / BPWM0_CH0 / TM0_EXT
9	PA.10 / ACMP1_P0 / EBI_nWR / USCI0_DAT0 / BPWM0_CH1 / TM1_EXT
10	PA.9 / EBI_MCLK / USCI0_DAT1 / UART1_TXD / BPWM0_CH2 / TM2_EXT
11	PA.8 / EBI_ALE / USCI0_CTL1 / UART1_RXD / BPWM0_CH3 / TM3_EXT / INT4
12	PF.6 / EBI_ADR19 / SPI0_MOSI / UART4_RXD / EBI_nCS0
13	PF.14 / PWM1_BRAKE0 / PWM0_BRAKE0 / PWM0_CH4 / CLKO / TM3 / INT5
14	PF.5 / UART2_RXD / UART2_nCTS / PWM0_CH0 / BPWM0_CH4 / X32_IN / ADC0_ST
15	PF.4 / UART2_TXD / UART2_nRTS / PWM0_CH1 / BPWM0_CH5 / X32_OUT
16	PF.3 / EBI_nCS0 / UART0_TXD / I2C0_SCL / XT1_IN / BPWM1_CH0
17	PF.2 / EBI_nCS1 / UART0_RXD / I2C0_SDA / QSPI0_CLK / XT1_OUT / BPWM1_CH1
18	PC.7 / EBI_AD9 / UART4_TXD / UART0_nCTS / PWM1_CH2 / BPWM1_CH0 / TM0 / INT3
19	PC.6 / EBI_AD8 / UART4_RXD / UART0_nRTS / PWM1_CH3 / BPWM1_CH1 / TM1 / INT2
20	PA.7 / EBI_AD7 / UART0_TXD / I2C1_SCL / PWM1_CH4 / BPWM1_CH2 / ACMP0_WLAT / TM2 / INT1
21	PA.6 / EBI_AD6 / UART0_RXD / I2C1_SDA / PWM1_CH5 / BPWM1_CH3 / ACMP1_WLAT / TM3 / INT0
22	VSS
23	V_{DD}
24	PD.15 / PWM0_CH5 / TM3 / INT1
25	PA.5 / QSPI0_MISO1 / UART0_nCTS / UART0_TXD / I2C0_SCL / UART5_TXD / BPWM0_CH5 / PWM0_CH0
26	PA.4 / QSPI0_MOSI1 / SPI0_I2SMCLK / UART0_nRTS / UART0_RXD / I2C0_SDA / UART5_RXD / BPWM0_CH4 / PWM0_CH1
27	PA.3 / QSPI0_SS / SPI0_SS / UART4_TXD / I2C0_SMBAL / UART1_TXD / I2C1_SCL / BPWM0_CH3 / PWM0_CH2 / CLKO / PWM1_BRAKE1
28	PA.2 / QSPI0_CLK / SPI0_CLK / UART4_RXD / I2C0_SMBSUS / UART1_RXD / I2C1_SDA / BPWM0_CH2 / PWM0_CH3
29	PA.1 / QSPI0_MISO0 / SPI0_MISO / UART0_TXD / UART1_nCTS / BPWM0_CH1 / PWM0_CH4
30	PA.0 / QSPI0_MOSI0 / SPI0_MOSI / UART0_RXD / UART1_nRTS / BPWM0_CH0 / PWM0_CH5
31	PF.15 / PWM0_BRAKE0 / PWM0_CH1 / TM2 / CLKO / INT4
32	nRESET
33	PF.0 / UART1_TXD / I2C1_SCL / UART0_TXD / BPWM1_CH0 / ICE_DAT
34	PF.1 / UART1_RXD / I2C1_SDA / UART0_RXD / BPWM1_CH1 / ICE_CLK

Pin	M031SG8AE Pin Function
35	PC.5 / EBI_AD5 / QSPI0_MISO1 / UART2_TXD / I2C1_SCL / UART4_TXD / PWM1_CH0
36	PC.4 / EBI_AD4 / QSPI0_MOSI1 / UART2_RXD / I2C1_SDA / UART4_RXD / PWM1_CH1
37	PC.3 / EBI_AD3 / QSPI0_SS / UART2_nRTS / I2C0_SMBAL / UART3_TXD / PWM1_CH2
38	PC.2 / EBI_AD2 / QSPI0_CLK / UART2_nCTS / I2C0_SMBSUS / UART3_RXD / PWM1_CH3
39	PC.1 / EBI_AD1 / QSPI0_MISO0 / UART2_TXD / I2C0_SCL / PWM1_CH4 / ACMP0_O / ADC0_ST
40	PC.0 / EBI_AD0 / QSPI0_MOSI0 / UART2_RXD / I2C0_SDA / PWM1_CH5 / ACMP1_O
41	PD.3 / EBI_AD10 / USCI0_CTL1 / SPI0_SS / UART3_nRTS / USCI1_CTL0 / UART0_TXD
42	PD.2 / EBI_AD11 / USCI0_DAT1 / SPI0_CLK / UART3_nCTS / UART0_RXD
43	PD.1 / EBI_AD12 / USCI0_DAT0 / SPI0_MISO / UART3_TXD
44	PD.0 / EBI_AD13 / USCI0_CLK / SPI0_MOSI / UART3_RXD / TM2
45	PA.12 / UART4_TXD / I2C1_SCL / BPWM1_CH2
46	PA.13 / UART4_RXD / I2C1_SDA / BPWM1_CH3
47	PA.14 / UART0_TXD / BPWM1_CH4
48	PA.15 / UART0_RXD / BPWM1_CH5
49	VSS
50	LDO_CAP
51	V_{DD}
52	PC.14 / EBI_AD11 / SPI0_I2SMCLK / USCI0_CTL0 / QSPI0_CLK / TM1
53	PB.15 / ADC0_CH15 / EBI_AD12 / SPI0_SS / USCI0_CTL1 / UART0_nCTS / UART3_TXD / PWM1_CH0 / TM0_EXT / PWM0_BRAKE1
54	PB.14 / ADC0_CH14 / EBI_AD13 / SPI0_CLK / USCI0_DAT1 / UART0_nRTS / UART3_RXD / PWM1_CH1 / TM1_EXT / CLKO
55	PB.13 / ADC0_CH13 / ACMP0_P3 / ACMP1_P3 / EBI_AD14 / SPI0_MISO / USCI0_DAT0 / UART0_TXD / UART3_nRTS / PWM1_CH2 / TM2_EXT
56	PB.12 / ADC0_CH12 / ACMP0_P2 / ACMP1_P2 / EBI_AD15 / SPI0_MOSI / USCI0_CLK / UART0_RXD / UART3_nCTS / PWM1_CH3 / TM3_EXT
57	AV_{DD}
58	V_{REF}
59	AVSS
60	PB.11 / ADC0_CH11 / EBI_ADR16 / UART0_nCTS / UART4_TXD / I2C1_SCL / SPI0_I2SMCLK / BPWM1_CH0
61	PB.10 / ADC0_CH10 / EBI_ADR17 / USCI1_CTL0 / UART0_nRTS / UART4_RXD / I2C1_SDA / BPWM1_CH1
62	PB.9 / ADC0_CH9 / EBI_ADR18 / USCI1_CTL1 / UART0_TXD / UART1_nCTS / BPWM1_CH2
63	PB.8 / ADC0_CH8 / EBI_ADR19 / USCI1_CLK / UART0_RXD / UART1_nRTS / BPWM1_CH3
64	PB.7 / ADC0_CH7 / EBI_nWRL / USCI1_DAT0 / UART1_TXD / EBI_nCS0 / BPWM1_CH4 / PWM1_BRAKE0 / PWM1_CH4 / INT5 / ACMP0_O

Table 4.1-18 M031SG8AE Multi-function Pin Table

M031SIAAE

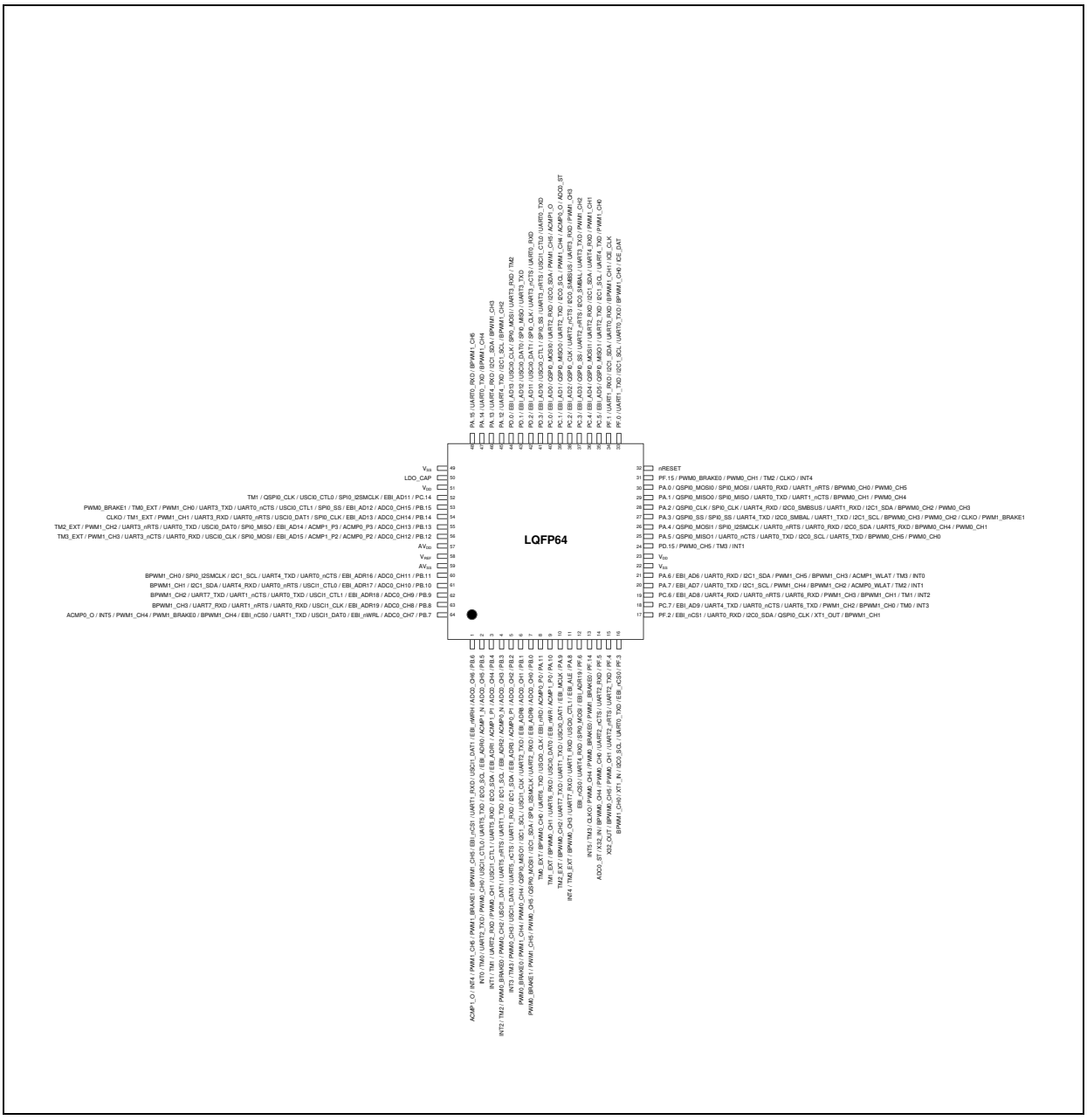

Figure 4.1-25 M031SIAAE Multi-function Pin Diagram

Pin	M031SIAAE Pin Function
1	PB.6 / ADC0_CH6 / EBI_nWRH / USCI1_DAT1 / UART1_RXD / EBI_nCS1 / BPWM1_CH5 / PWM1_BRAKE1 / PWM1_CH5 / INT4 / ACMP1_O
2	PB.5 / ADC0_CH5 / ACMP1_N / EBI_ADR0 / I2C0_SCL / UART5_TXD / USCI1_CTL0 / PWM0_CH0 / UART2_TXD / TM0 / INT0
3	PB.4 / ADC0_CH4 / ACMP1_P1 / EBI_ADR1 / I2C0_SDA / UART5_RXD / USCI1_CTL1 / PWM0_CH1 / UART2_RXD / TM1 / INT1

Pin	M031SIAAE Pin Function
4	PB.3 / ADC0_CH3 / ACMP0_N / EBI_ADR2 / I2C1_SCL / UART1_TXD / UART5_nRTS / USCI1_DAT1 / PWM0_CH2 / PWM0_BRAKE0 / TM2 / INT2
5	PB.2 / ADC0_CH2 / ACMP0_P1 / EBI_ADR3 / I2C1_SDA / UART1_RXD / UART5_nCTS / USCI1_DAT0 / PWM0_CH3 / TM3 / INT3
6	PB.1 / ADC0_CH1 / EBI_ADR8 / UART2_TXD / USCI1_CLK / I2C1_SCL / QSPI0_MISO1 / PWM0_CH4 / PWM1_CH4 / PWM0_BRAKE0
7	PB.0 / ADC0_CH0 / EBI_ADR9 / UART2_RXD / SPI0_I2SMCLK / I2C1_SDA / QSPI0_MOSI1 / PWM0_CH5 / PWM1_CH5 / PWM0_BRAKE1
8	PA.11 / ACMP0_P0 / EBI_nRD / USCI0_CLK / UART6_TXD / BPWM0_CH0 / TM0_EXT
9	PA.10 / ACMP1_P0 / EBI_nWR / USCI0_DAT0 / UART6_RXD / BPWM0_CH1 / TM1_EXT
10	PA.9 / EBI_MCLK / USCI0_DAT1 / UART1_TXD / UART7_TXD / BPWM0_CH2 / TM2_EXT
11	PA.8 / EBI_ALE / USCI0_CTL1 / UART1_RXD / UART7_RXD / BPWM0_CH3 / TM3_EXT / INT4
12	PF.6 / EBI_ADR19 / SPI0_MOSI / UART4_RXD / EBI_nCS0
13	PF.14 / PWM1_BRAKE0 / PWM0_BRAKE0 / PWM0_CH4 / CLKO / TM3 / INT5
14	PF.5 / UART2_RXD / UART2_nCTS / PWM0_CH0 / BPWM0_CH4 / X32_IN / ADC0_ST
15	PF.4 / UART2_TXD / UART2_nRTS / PWM0_CH1 / BPWM0_CH5 / X32_OUT
16	PF.3 / EBI_nCS0 / UART0_TXD / I2C0_SCL / XT1_IN / BPWM1_CH0
17	PF.2 / EBI_nCS1 / UART0_RXD / I2C0_SDA / QSPI0_CLK / XT1_OUT / BPWM1_CH1
18	PC.7 / EBI_AD9 / UART4_TXD / UART0_nCTS / UART6_TXD / PWM1_CH2 / BPWM1_CH0 / TM0 / INT3
19	PC.6 / EBI_AD8 / UART4_RXD / UART0_nRTS / UART6_RXD / PWM1_CH3 / BPWM1_CH1 / TM1 / INT2
20	PA.7 / EBI_AD7 / UART0_TXD / I2C1_SCL / PWM1_CH4 / BPWM1_CH2 / ACMP0_WLAT / TM2 / INT1
21	PA.6 / EBI_AD6 / UART0_RXD / I2C1_SDA / PWM1_CH5 / BPWM1_CH3 / ACMP1_WLAT / TM3 / INT0
22	VSS
23	V_{DD}
24	PD.15 / PWM0_CH5 / TM3 / INT1
25	PA.5 / QSPI0_MISO1 / UART0_nCTS / UART0_TXD / I2C0_SCL / UART5_TXD / BPWM0_CH5 / PWM0_CH0
26	PA.4 / QSPI0_MOSI1 / SPI0_I2SMCLK / UART0_nRTS / UART0_RXD / I2C0_SDA / UART5_RXD / BPWM0_CH4 / PWM0_CH1
27	PA.3 / QSPI0_SS / SPI0_SS / UART4_TXD / I2C0_SMBAL / UART1_TXD / I2C1_SCL / BPWM0_CH3 / PWM0_CH2 / CLKO / PWM1_BRAKE1
28	PA.2 / QSPI0_CLK / SPI0_CLK / UART4_RXD / I2C0_SMBSUS / UART1_RXD / I2C1_SDA / BPWM0_CH2 / PWM0_CH3
29	PA.1 / QSPI0_MISO0 / SPI0_MISO / UART0_TXD / UART1_nCTS / BPWM0_CH1 / PWM0_CH4
30	PA.0 / QSPI0_MOSI0 / SPI0_MOSI / UART0_RXD / UART1_nRTS / BPWM0_CH0 / PWM0_CH5
31	PF.15 / PWM0_BRAKE0 / PWM0_CH1 / TM2 / CLKO / INT4
32	nRESET
33	PF.0 / UART1_TXD / I2C1_SCL / UART0_TXD / BPWM1_CH0 / ICE_DAT
34	PF.1 / UART1_RXD / I2C1_SDA / UART0_RXD / BPWM1_CH1 / ICE_CLK

Pin	M031SIAAE Pin Function
35	PC.5 / EBI_AD5 / QSPI0_MISO1 / UART2_TXD / I2C1_SCL / UART4_TXD / PWM1_CH0
36	PC.4 / EBI_AD4 / QSPI0_MOSI1 / UART2_RXD / I2C1_SDA / UART4_RXD / PWM1_CH1
37	PC.3 / EBI_AD3 / QSPI0_SS / UART2_nRTS / I2C0_SMBAL / UART3_TXD / PWM1_CH2
38	PC.2 / EBI_AD2 / QSPI0_CLK / UART2_nCTS / I2C0_SMBSUS / UART3_RXD / PWM1_CH3
39	PC.1 / EBI_AD1 / QSPI0_MISO0 / UART2_TXD / I2C0_SCL / PWM1_CH4 / ACMP0_O / ADC0_ST
40	PC.0 / EBI_AD0 / QSPI0_MOSI0 / UART2_RXD / I2C0_SDA / PWM1_CH5 / ACMP1_O
41	PD.3 / EBI_AD10 / USCI0_CTL1 / SPI0_SS / UART3_nRTS / USCI1_CTL0 / UART0_TXD
42	PD.2 / EBI_AD11 / USCI0_DAT1 / SPI0_CLK / UART3_nCTS / UART0_RXD
43	PD.1 / EBI_AD12 / USCI0_DAT0 / SPI0_MISO / UART3_TXD
44	PD.0 / EBI_AD13 / USCI0_CLK / SPI0_MOSI / UART3_RXD / TM2
45	PA.12 / UART4_TXD / I2C1_SCL / BPWM1_CH2
46	PA.13 / UART4_RXD / I2C1_SDA / BPWM1_CH3
47	PA.14 / UART0_TXD / BPWM1_CH4
48	PA.15 / UART0_RXD / BPWM1_CH5
49	VSS
50	LDO_CAP
51	V_{DD}
52	PC.14 / EBI_AD11 / SPI0_I2SMCLK / USCI0_CTL0 / QSPI0_CLK / TM1
53	PB.15 / ADC0_CH15 / EBI_AD12 / SPI0_SS / USCI0_CTL1 / UART0_nCTS / UART3_TXD / PWM1_CH0 / TM0_EXT / PWM0_BRAKE1
54	PB.14 / ADC0_CH14 / EBI_AD13 / SPI0_CLK / USCI0_DAT1 / UART0_nRTS / UART3_RXD / PWM1_CH1 / TM1_EXT / CLKO
55	PB.13 / ADC0_CH13 / ACMP0_P3 / ACMP1_P3 / EBI_AD14 / SPI0_MISO / USCI0_DAT0 / UART0_TXD / UART3_nRTS / PWM1_CH2 / TM2_EXT
56	PB.12 / ADC0_CH12 / ACMP0_P2 / ACMP1_P2 / EBI_AD15 / SPI0_MOSI / USCI0_CLK / UART0_RXD / UART3_nCTS / PWM1_CH3 / TM3_EXT
57	AV_{DD}
58	V_{REF}
59	AVSS
60	PB.11 / ADC0_CH11 / EBI_ADR16 / UART0_nCTS / UART4_TXD / I2C1_SCL / SPI0_I2SMCLK / BPWM1_CH0
61	PB.10 / ADC0_CH10 / EBI_ADR17 / USCI1_CTL0 / UART0_nRTS / UART4_RXD / I2C1_SDA / BPWM1_CH1
62	PB.9 / ADC0_CH9 / EBI_ADR18 / USCI1_CTL1 / UART0_TXD / UART1_nCTS / UART7_TXD / BPWM1_CH2
63	PB.8 / ADC0_CH8 / EBI_ADR19 / USCI1_CLK / UART0_RXD / UART1_nRTS / UART7_RXD / BPWM1_CH3
64	PB.7 / ADC0_CH7 / EBI_nWRL / USCI1_DAT0 / UART1_TXD / EBI_nCS0 / BPWM1_CH4 / PWM1_BRAKE0 / PWM1_CH4 / INT5 / ACMP0_O

Table 4.1-19 M031SIAAE Multi-function Pin Table

4.1.2.6 M031 Series LQFP 128-Pin Multi-function Pin Diagram

Corresponding Part Number: M031KG6AE, M031KG8AE, M031KIAAE

M031KG6AE

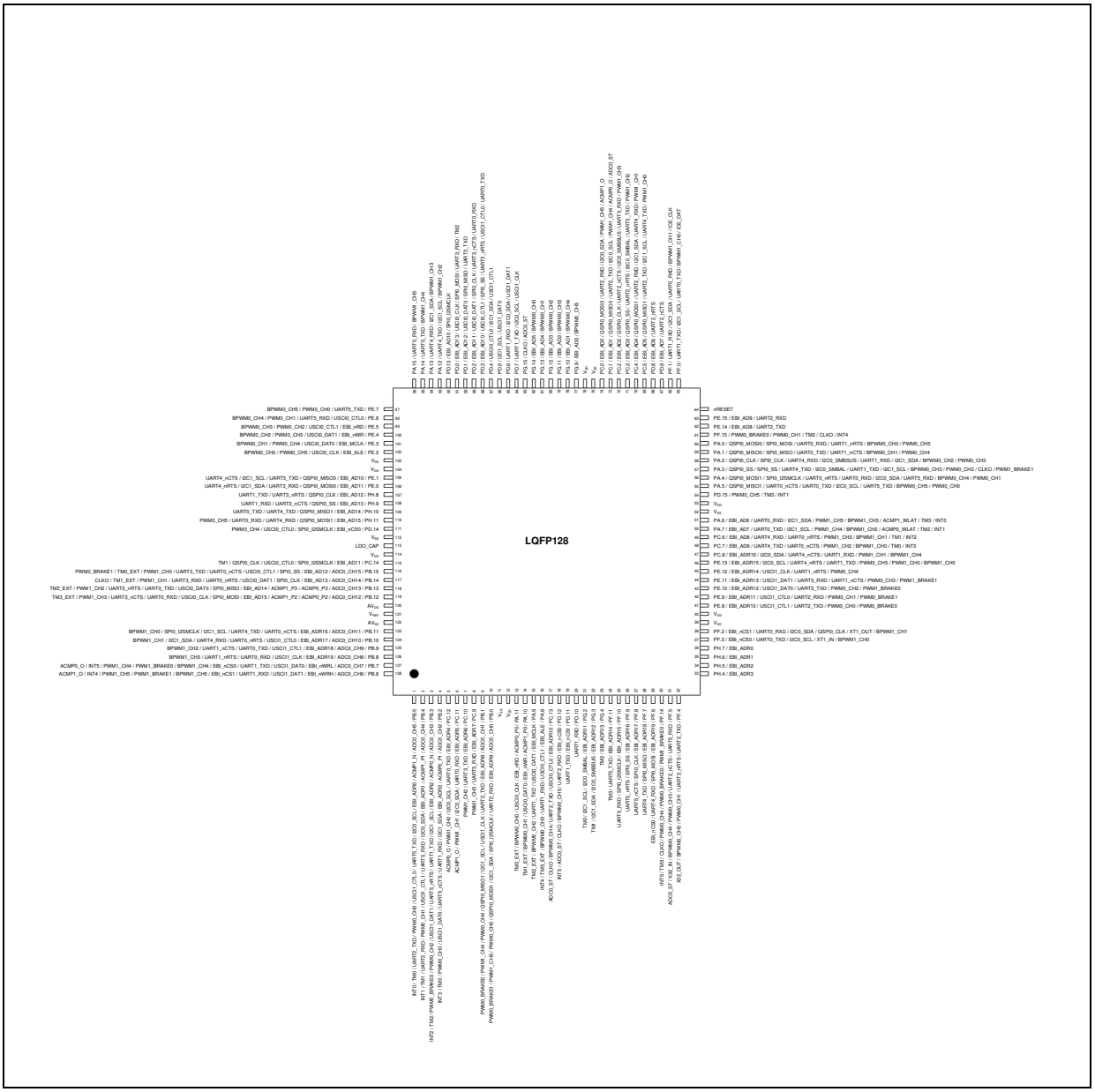

Figure 4.1-26 M031KG6AE Multi-function Pin Diagram

Pin	M031KG6AE Pin Function
1	PB.5 / ADC0_CH5 / ACMP1_N / EBI_ADR0 / I2C0_SCL / UART5_TXD / USCI1_CTL0 / PWM0_CH0 / UART2_TXD / TM0 / INT0
2	PB.4 / ADC0_CH4 / ACMP1_P1 / EBI_ADR1 / I2C0_SDA / UART5_RXD / USCI1_CTL1 / PWM0_CH1 / UART2_RXD / TM1 / INT1

Pin	M031KG6AE Pin Function
3	PB.3 / ADC0_CH3 / ACMP0_N / EBI_ADR2 / I2C1_SCL / UART1_TXD / UART5_nRTS / USCI1_DAT1 / PWM0_CH2 / PWM0_BRAKE0 / TM2 / INT2
4	PB.2 / ADC0_CH2 / ACMP0_P1 / EBI_ADR3 / I2C1_SDA / UART1_RXD / UART5_nCTS / USCI1_DAT0 / PWM0_CH3 / TM3 / INT3
5	PC.12 / EBI_ADR4 / UART0_TXD / I2C0_SCL / PWM1_CH0 / ACMP0_O
6	PC.11 / EBI_ADR5 / UART0_RXD / I2C0_SDA / PWM1_CH1 / ACMP1_O
7	PC.10 / EBI_ADR6 / UART3_TXD / PWM1_CH2
8	PC.9 / EBI_ADR7 / UART3_RXD / PWM1_CH3
9	PB.1 / ADC0_CH1 / EBI_ADR8 / UART2_TXD / USCI1_CLK / I2C1_SCL / QSPI0_MISO1 / PWM0_CH4 / PWM1_CH4 / PWM0_BRAKE0
10	PB.0 / ADC0_CH0 / EBI_ADR9 / UART2_RXD / SPI0_I2SMCLK / I2C1_SDA / QSPI0_MOSI1 / PWM0_CH5 / PWM1_CH5 / PWM0_BRAKE1
11	VSS
12	V_{DD}
13	PA.11 / ACMP0_P0 / EBI_nRD / USCI0_CLK / BPWM0_CH0 / TM0_EXT
14	PA.10 / ACMP1_P0 / EBI_nWR / USCI0_DAT0 / BPWM0_CH1 / TM1_EXT
15	PA.9 / EBI_MCLK / USCI0_DAT1 / UART1_TXD / BPWM0_CH2 / TM2_EXT
16	PA.8 / EBI_ALE / USCI0_CTL1 / UART1_RXD / BPWM0_CH3 / TM3_EXT / INT4
17	PC.13 / EBI_ADR10 / USCI0_CTL0 / UART2_TXD / BPWM0_CH4 / CLKO / ADC0_ST
18	PD.12 / EBI_nCS0 / UART2_RXD / BPWM0_CH5 / CLKO / ADC0_ST / INT5
19	PD.11 / EBI_nCS1 / UART1_TXD
20	PD.10 / UART1_RXD
21	PG.2 / EBI_ADR11 / I2C0_SMBAL / I2C1_SCL / TM0
22	PG.3 / EBI_ADR12 / I2C0_SMBSUS / I2C1_SDA / TM1
23	PG.4 / EBI_ADR13 / TM2
24	PF.11 / EBI_ADR14 / UART5_TXD / TM3
25	PF.10 / EBI_ADR15 / SPI0_I2SMCLK / UART5_RXD
26	PF.9 / EBI_ADR16 / SPI0_SS / UART5_nRTS
27	PF.8 / EBI_ADR17 / SPI0_CLK / UART5_nCTS
28	PF.7 / EBI_ADR18 / SPI0_MISO / UART4_TXD
29	PF.6 / EBI_ADR19 / SPI0_MOSI / UART4_RXD / EBI_nCS0
30	PF.14 / PWM1_BRAKE0 / PWM0_BRAKE0 / PWM0_CH4 / CLKO / TM3 / INT5
31	PF.5 / UART2_RXD / UART2_nCTS / PWM0_CH0 / BPWM0_CH4 / X32_IN / ADC0_ST
32	PF.4 / UART2_TXD / UART2_nRTS / PWM0_CH1 / BPWM0_CH5 / X32_OUT
33	PH.4 / EBI_ADR3
34	PH.5 / EBI_ADR2

Pin	M031KG6AE Pin Function
35	PH.6 / EBI_ADR1
36	PH.7 / EBI_ADR0
37	PF.3 / EBI_nCS0 / UART0_TXD / I2C0_SCL / XT1_IN / BPWM1_CH0
38	PF.2 / EBI_nCS1 / UART0_RXD / I2C0_SDA / QSPI0_CLK / XT1_OUT / BPWM1_CH1
39	VSS
40	V_{DD}
41	PE.8 / EBI_ADR10 / USCI1_CTL1 / UART2_TXD / PWM0_CH0 / PWM0_BRAKE0
42	PE.9 / EBI_ADR11 / USCI1_CTL0 / UART2_RXD / PWM0_CH1 / PWM0_BRAKE1
43	PE.10 / EBI_ADR12 / USCI1_DAT0 / UART3_TXD / PWM0_CH2 / PWM1_BRAKE0
44	PE.11 / EBI_ADR13 / USCI1_DAT1 / UART3_RXD / UART1_nCTS / PWM0_CH3 / PWM1_BRAKE1
45	PE.12 / EBI_ADR14 / USCI1_CLK / UART1_nRTS / PWM0_CH4
46	PE.13 / EBI_ADR15 / I2C0_SCL / UART4_nRTS / UART1_TXD / PWM0_CH5 / PWM1_CH0 / BPWM1_CH5
47	PC.8 / EBI_ADR16 / I2C0_SDA / UART4_nCTS / UART1_RXD / PWM1_CH1 / BPWM1_CH4
48	PC.7 / EBI_AD9 / UART4_TXD / UART0_nCTS / PWM1_CH2 / BPWM1_CH0 / TM0 / INT3
49	PC.6 / EBI_AD8 / UART4_RXD / UART0_nRTS / PWM1_CH3 / BPWM1_CH1 / TM1 / INT2
50	PA.7 / EBI_AD7 / UART0_TXD / I2C1_SCL / PWM1_CH4 / BPWM1_CH2 / ACMP0_WLAT / TM2 / INT1
51	PA.6 / EBI_AD6 / UART0_RXD / I2C1_SDA / PWM1_CH5 / BPWM1_CH3 / ACMP1_WLAT / TM3 / INT0
52	VSS
53	V_{DD}
54	PD.15 / PWM0_CH5 / TM3 / INT1
55	PA.5 / QSPI0_MISO1 / UART0_nCTS / UART0_TXD / I2C0_SCL / UART5_TXD / BPWM0_CH5 / PWM0_CH0
56	PA.4 / QSPI0_MOSI1 / SPI0_I2SMCLK / UART0_nRTS / UART0_RXD / I2C0_SDA / UART5_RXD / BPWM0_CH4 / PWM0_CH1
57	PA.3 / QSPI0_SS / SPI0_SS / UART4_TXD / I2C0_SMBAL / UART1_TXD / I2C1_SCL / BPWM0_CH3 / PWM0_CH2 / CLKO / PWM1_BRAKE1
58	PA.2 / QSPI0_CLK / SPI0_CLK / UART4_RXD / I2C0_SMBSUS / UART1_RXD / I2C1_SDA / BPWM0_CH2 / PWM0_CH3
59	PA.1 / QSPI0_MISO0 / SPI0_MISO / UART0_TXD / UART1_nCTS / BPWM0_CH1 / PWM0_CH4
60	PA.0 / QSPI0_MOSI0 / SPI0_MOSI / UART0_RXD / UART1_nRTS / BPWM0_CH0 / PWM0_CH5
61	PF.15 / PWM0_BRAKE0 / PWM0_CH1 / TM2 / CLKO / INT4
62	PE.14 / EBI_AD8 / UART2_TXD
63	PE.15 / EBI_AD9 / UART2_RXD
64	nRESET
65	PF.0 / UART1_TXD / I2C1_SCL / UART0_TXD / BPWM1_CH0 / ICE_DAT
66	PF.1 / UART1_RXD / I2C1_SDA / UART0_RXD / BPWM1_CH1 / ICE_CLK
67	PD.9 / EBI_AD7 / UART2_nCTS

Pin	M031KG6AE Pin Function
68	PD.8 / EBI_AD6 / UART2_nRTS
69	PC.5 / EBI_AD5 / QSPI0_MISO1 / UART2_TXD / I2C1_SCL / UART4_TXD / PWM1_CH0
70	PC.4 / EBI_AD4 / QSPI0_MOSI1 / UART2_RXD / I2C1_SDA / UART4_RXD / PWM1_CH1
71	PC.3 / EBI_AD3 / QSPI0_SS / UART2_nRTS / I2C0_SMBAL / UART3_TXD / PWM1_CH2
72	PC.2 / EBI_AD2 / QSPI0_CLK / UART2_nCTS / I2C0_SMBSUS / UART3_RXD / PWM1_CH3
73	PC.1 / EBI_AD1 / QSPI0_MISO0 / UART2_TXD / I2C0_SCL / PWM1_CH4 / ACMP0_O / ADC0_ST
74	PC.0 / EBI_AD0 / QSPI0_MOSI0 / UART2_RXD / I2C0_SDA / PWM1_CH5 / ACMP1_O
75	VSS
76	V_{DD}
77	PG.9 / EBI_AD0 / BPWM0_CH5
78	PG.10 / EBI_AD1 / BPWM0_CH4
79	PG.11 / EBI_AD2 / BPWM0_CH3
80	PG.12 / EBI_AD3 / BPWM0_CH2
81	PG.13 / EBI_AD4 / BPWM0_CH1
82	PG.14 / EBI_AD5 / BPWM0_CH0
83	PG.15 / CLKO / ADC0_ST
84	PD.7 / UART1_TXD / I2C0_SCL / USCI1_CLK
85	PD.6 / UART1_RXD / I2C0_SDA / USCI1_DAT1
86	PD.5 / I2C1_SCL / USCI1_DAT0
87	PD.4 / USCI0_CTL0 / I2C1_SDA / USCI1_CTL1
88	PD.3 / EBI_AD10 / USCI0_CTL1 / SPI0_SS / UART3_nRTS / USCI1_CTL0 / UART0_TXD
89	PD.2 / EBI_AD11 / USCI0_DAT1 / SPI0_CLK / UART3_nCTS / UART0_RXD
90	PD.1 / EBI_AD12 / USCI0_DAT0 / SPI0_MISO / UART3_TXD
91	PD.0 / EBI_AD13 / USCI0_CLK / SPI0_MOSI / UART3_RXD / TM2
92	PD.13 / EBI_AD10 / SPI0_I2SMCLK
93	PA.12 / UART4_TXD / I2C1_SCL / BPWM1_CH2
94	PA.13 / UART4_RXD / I2C1_SDA / BPWM1_CH3
95	PA.14 / UART0_TXD / BPWM1_CH4
96	PA.15 / UART0_RXD / BPWM1_CH5
97	PE.7 / UART5_TXD / PWM0_CH0 / BPWM0_CH5
98	PE.6 / USCI0_CTL0 / UART5_RXD / PWM0_CH1 / BPWM0_CH4
99	PE.5 / EBI_nRD / USCI0_CTL1 / PWM0_CH2 / BPWM0_CH3
100	PE.4 / EBI_nWR / USCI0_DAT1 / PWM0_CH3 / BPWM0_CH2
101	PE.3 / EBI_MCLK / USCI0_DAT0 / PWM0_CH4 / BPWM0_CH1

Pin	M031KG6AE Pin Function
102	PE.2 / EBI_ALE / USCI0_CLK / PWM0_CH5 / BPWM0_CH0
103	VSS
104	V_{DD}
105	PE.1 / EBI_AD10 / QSPI0_MISO0 / UART3_TXD / I2C1_SCL / UART4_nCTS
106	PE.0 / EBI_AD11 / QSPI0_MOSI0 / UART3_RXD / I2C1_SDA / UART4_nRTS
107	PH.8 / EBI_AD12 / QSPI0_CLK / UART3_nRTS / UART1_TXD
108	PH.9 / EBI_AD13 / QSPI0_SS / UART3_nCTS / UART1_RXD
109	PH.10 / EBI_AD14 / QSPI0_MISO1 / UART4_TXD / UART0_TXD
110	PH.11 / EBI_AD15 / QSPI0_MOSI1 / UART4_RXD / UART0_RXD / PWM0_CH5
111	PD.14 / EBI_nCS0 / SPI0_I2SMCLK / USCI0_CTL0 / PWM0_CH4
112	VSS
113	LDO_CAP
114	V_{DD}
115	PC.14 / EBI_AD11 / SPI0_I2SMCLK / USCI0_CTL0 / QSPI0_CLK / TM1
116	PB.15 / ADC0_CH15 / EBI_AD12 / SPI0_SS / USCI0_CTL1 / UART0_nCTS / UART3_TXD / PWM1_CH0 / TM0_EXT / PWM0_BRAKE1
117	PB.14 / ADC0_CH14 / EBI_AD13 / SPI0_CLK / USCI0_DAT1 / UART0_nRTS / UART3_RXD / PWM1_CH1 / TM1_EXT / CLKO
118	PB.13 / ADC0_CH13 / ACMP0_P3 / ACMP1_P3 / EBI_AD14 / SPI0_MISO / USCI0_DAT0 / UART0_TXD / UART3_nRTS / PWM1_CH2 / TM2_EXT
119	PB.12 / ADC0_CH12 / ACMP0_P2 / ACMP1_P2 / EBI_AD15 / SPI0_MOSI / USCI0_CLK / UART0_RXD / UART3_nCTS / PWM1_CH3 / TM3_EXT
120	AV_{DD}
121	V_{REF}
122	AVSS
123	PB.11 / ADC0_CH11 / EBI_ADR16 / UART0_nCTS / UART4_TXD / I2C1_SCL / SPI0_I2SMCLK / BPWM1_CH0
124	PB.10 / ADC0_CH10 / EBI_ADR17 / USCI1_CTL0 / UART0_nRTS / UART4_RXD / I2C1_SDA / BPWM1_CH1
125	PB.9 / ADC0_CH9 / EBI_ADR18 / USCI1_CTL1 / UART0_TXD / UART1_nCTS / BPWM1_CH2
126	PB.8 / ADC0_CH8 / EBI_ADR19 / USCI1_CLK / UART0_RXD / UART1_nRTS / BPWM1_CH3
127	PB.7 / ADC0_CH7 / EBI_nWRL / USCI1_DAT0 / UART1_TXD / EBI_nCS0 / BPWM1_CH4 / PWM1_BRAKE0 / PWM1_CH4 / INT5 / ACMP0_O
128	PB.6 / ADC0_CH6 / EBI_nWRH / USCI1_DAT1 / UART1_RXD / EBI_nCS1 / BPWM1_CH5 / PWM1_BRAKE1 / PWM1_CH5 / INT4 / ACMP1_O

Table 4.1-20 M031KG6AE Multi-function Pin Table

M031KG8AE

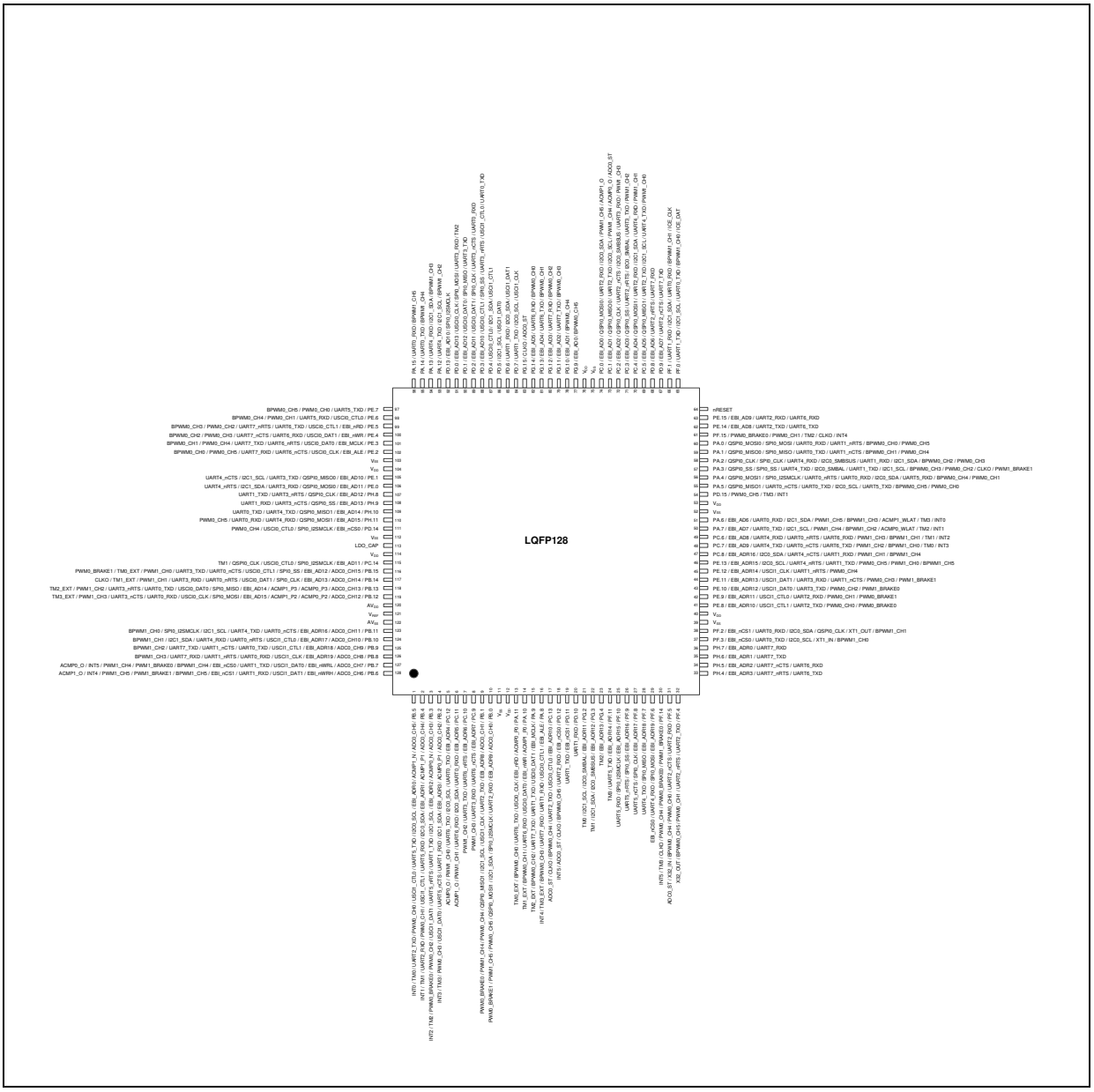

Figure 4.1-27 M031KG8AE Multi-function Pin Diagram

Pin	M031KG8AE Pin Function
1	PB.5 / ADC0_CH5 / ACMP1_N / EBI_ADR0 / I2C0_SCL / UART5_TXD / USCI1_CTL0 / PWM0_CH0 / UART2_TXD / TM0 / INT0
2	PB.4 / ADC0_CH4 / ACMP1_P1 / EBI_ADR1 / I2C0_SDA / UART5_RXD / USCI1_CTL1 / PWM0_CH1 / UART2_RXD / TM1 / INT1
3	PB.3 / ADC0_CH3 / ACMP0_N / EBI_ADR2 / I2C1_SCL / UART1_TXD / UART5_nRTS / USCI1_DAT1 / PWM0_CH2 / PWM0_BRAKE0 / TM2 / INT2
4	PB.2 / ADC0_CH2 / ACMP0_P1 / EBI_ADR3 / I2C1_SDA / UART1_RXD / UART5_nCTS / USCI1_DAT0 / PWM0_CH3 / TM3 / INT3

Pin	M031KG8AE Pin Function
5	PC.12 / EBI_ADR4 / UART0_TXD / I2C0_SCL / PWM1_CH0 / ACMP0_O
6	PC.11 / EBI_ADR5 / UART0_RXD / I2C0_SDA / PWM1_CH1 / ACMP1_O
7	PC.10 / EBI_ADR6 / UART3_TXD / PWM1_CH2
8	PC.9 / EBI_ADR7 / UART3_RXD / PWM1_CH3
9	PB.1 / ADC0_CH1 / EBI_ADR8 / UART2_TXD / USCI1_CLK / I2C1_SCL / QSPI0_MISO1 / PWM0_CH4 / PWM1_CH4 / PWM0_BRAKE0
10	PB.0 / ADC0_CH0 / EBI_ADR9 / UART2_RXD / SPI0_I2SMCLK / I2C1_SDA / QSPI0_MOSI1 / PWM0_CH5 / PWM1_CH5 / PWM0_BRAKE1
11	VSS
12	V_{DD}
13	PA.11 / ACMP0_P0 / EBI_nRD / USCI0_CLK / BPWM0_CH0 / TM0_EXT
14	PA.10 / ACMP1_P0 / EBI_nWR / USCI0_DAT0 / BPWM0_CH1 / TM1_EXT
15	PA.9 / EBI_MCLK / USCI0_DAT1 / UART1_TXD / BPWM0_CH2 / TM2_EXT
16	PA.8 / EBI_ALE / USCI0_CTL1 / UART1_RXD / BPWM0_CH3 / TM3_EXT / INT4
17	PC.13 / EBI_ADR10 / USCI0_CTL0 / UART2_TXD / BPWM0_CH4 / CLKO / ADC0_ST
18	PD.12 / EBI_nCS0 / UART2_RXD / BPWM0_CH5 / CLKO / ADC0_ST / INT5
19	PD.11 / EBI_nCS1 / UART1_TXD
20	PD.10 / UART1_RXD
21	PG.2 / EBI_ADR11 / I2C0_SMBAL / I2C1_SCL / TM0
22	PG.3 / EBI_ADR12 / I2C0_SMBSUS / I2C1_SDA / TM1
23	PG.4 / EBI_ADR13 / TM2
24	PF.11 / EBI_ADR14 / UART5_TXD / TM3
25	PF.10 / EBI_ADR15 / SPI0_I2SMCLK / UART5_RXD
26	PF.9 / EBI_ADR16 / SPI0_SS / UART5_nRTS
27	PF.8 / EBI_ADR17 / SPI0_CLK / UART5_nCTS
28	PF.7 / EBI_ADR18 / SPI0_MISO / UART4_TXD
29	PF.6 / EBI_ADR19 / SPI0_MOSI / UART4_RXD / EBI_nCS0
30	PF.14 / PWM1_BRAKE0 / PWM0_BRAKE0 / PWM0_CH4 / CLKO / TM3 / INT5
31	PF.5 / UART2_RXD / UART2_nCTS / PWM0_CH0 / BPWM0_CH4 / X32_IN / ADC0_ST
32	PF.4 / UART2_TXD / UART2_nRTS / PWM0_CH1 / BPWM0_CH5 / X32_OUT
33	PH.4 / EBI_ADR3
34	PH.5 / EBI_ADR2
35	PH.6 / EBI_ADR1
36	PH.7 / EBI_ADR0
37	PF.3 / EBI_nCS0 / UART0_TXD / I2C0_SCL / XT1_IN / BPWM1_CH0

Pin	M031KG8AE Pin Function
38	PF.2 / EBI_nCS1 / UART0_RXD / I2C0_SDA / QSPI0_CLK / XT1_OUT / BPWM1_CH1
39	VSS
40	V_{DD}
41	PE.8 / EBI_ADR10 / USCI1_CTL1 / UART2_TXD / PWM0_CH0 / PWM0_BRAKE0
42	PE.9 / EBI_ADR11 / USCI1_CTL0 / UART2_RXD / PWM0_CH1 / PWM0_BRAKE1
43	PE.10 / EBI_ADR12 / USCI1_DAT0 / UART3_TXD / PWM0_CH2 / PWM1_BRAKE0
44	PE.11 / EBI_ADR13 / USCI1_DAT1 / UART3_RXD / UART1_nCTS / PWM0_CH3 / PWM1_BRAKE1
45	PE.12 / EBI_ADR14 / USCI1_CLK / UART1_nRTS / PWM0_CH4
46	PE.13 / EBI_ADR15 / I2C0_SCL / UART4_nRTS / UART1_TXD / PWM0_CH5 / PWM1_CH0 / BPWM1_CH5
47	PC.8 / EBI_ADR16 / I2C0_SDA / UART4_nCTS / UART1_RXD / PWM1_CH1 / BPWM1_CH4
48	PC.7 / EBI_AD9 / UART4_TXD / UART0_nCTS / PWM1_CH2 / BPWM1_CH0 / TM0 / INT3
49	PC.6 / EBI_AD8 / UART4_RXD / UART0_nRTS / PWM1_CH3 / BPWM1_CH1 / TM1 / INT2
50	PA.7 / EBI_AD7 / UART0_TXD / I2C1_SCL / PWM1_CH4 / BPWM1_CH2 / ACMP0_WLAT / TM2 / INT1
51	PA.6 / EBI_AD6 / UART0_RXD / I2C1_SDA / PWM1_CH5 / BPWM1_CH3 / ACMP1_WLAT / TM3 / INT0
52	VSS
53	V_{DD}
54	PD.15 / PWM0_CH5 / TM3 / INT1
55	PA.5 / QSPI0_MISO1 / UART0_nCTS / UART0_TXD / I2C0_SCL / UART5_TXD / BPWM0_CH5 / PWM0_CH0
56	PA.4 / QSPI0_MOSI1 / SPI0_I2SMCLK / UART0_nRTS / UART0_RXD / I2C0_SDA / UART5_RXD / BPWM0_CH4 / PWM0_CH1
57	PA.3 / QSPI0_SS / SPI0_SS / UART4_TXD / I2C0_SMBAL / UART1_TXD / I2C1_SCL / BPWM0_CH3 / PWM0_CH2 / CLKO / PWM1_BRAKE1
58	PA.2 / QSPI0_CLK / SPI0_CLK / UART4_RXD / I2C0_SMBSUS / UART1_RXD / I2C1_SDA / BPWM0_CH2 / PWM0_CH3
59	PA.1 / QSPI0_MISO0 / SPI0_MISO / UART0_TXD / UART1_nCTS / BPWM0_CH1 / PWM0_CH4
60	PA.0 / QSPI0_MOSI0 / SPI0_MOSI / UART0_RXD / UART1_nRTS / BPWM0_CH0 / PWM0_CH5
61	PF.15 / PWM0_BRAKE0 / PWM0_CH1 / TM2 / CLKO / INT4
62	PE.14 / EBI_AD8 / UART2_TXD
63	PE.15 / EBI_AD9 / UART2_RXD
64	nRESET
65	PF.0 / UART1_TXD / I2C1_SCL / UART0_TXD / BPWM1_CH0 / ICE_DAT
66	PF.1 / UART1_RXD / I2C1_SDA / UART0_RXD / BPWM1_CH1 / ICE_CLK
67	PD.9 / EBI_AD7 / UART2_nCTS
68	PD.8 / EBI_AD6 / UART2_nRTS
69	PC.5 / EBI_AD5 / QSPI0_MISO1 / UART2_TXD / I2C1_SCL / UART4_TXD / PWM1_CH0
70	PC.4 / EBI_AD4 / QSPI0_MOSI1 / UART2_RXD / I2C1_SDA / UART4_RXD / PWM1_CH1

Pin	M031KG8AE Pin Function
71	PC.3 / EBI_AD3 / QSPI0_SS / UART2_nRTS / I2C0_SMBAL / UART3_TXD / PWM1_CH2
72	PC.2 / EBI_AD2 / QSPI0_CLK / UART2_nCTS / I2C0_SMBSUS / UART3_RXD / PWM1_CH3
73	PC.1 / EBI_AD1 / QSPI0_MISO0 / UART2_TXD / I2C0_SCL / PWM1_CH4 / ACMP0_O / ADC0_ST
74	PC.0 / EBI_AD0 / QSPI0_MOSI0 / UART2_RXD / I2C0_SDA / PWM1_CH5 / ACMP1_O
75	VSS
76	V_{DD}
77	PG.9 / EBI_AD0 / BPWM0_CH5
78	PG.10 / EBI_AD1 / BPWM0_CH4
79	PG.11 / EBI_AD2 / BPWM0_CH3
80	PG.12 / EBI_AD3 / BPWM0_CH2
81	PG.13 / EBI_AD4 / BPWM0_CH1
82	PG.14 / EBI_AD5 / BPWM0_CH0
83	PG.15 / CLKO / ADC0_ST
84	PD.7 / UART1_TXD / I2C0_SCL / USCI1_CLK
85	PD.6 / UART1_RXD / I2C0_SDA / USCI1_DAT1
86	PD.5 / I2C1_SCL / USCI1_DAT0
87	PD.4 / USCI0_CTL0 / I2C1_SDA / USCI1_CTL1
88	PD.3 / EBI_AD10 / USCI0_CTL1 / SPI0_SS / UART3_nRTS / USCI1_CTL0 / UART0_TXD
89	PD.2 / EBI_AD11 / USCI0_DAT1 / SPI0_CLK / UART3_nCTS / UART0_RXD
90	PD.1 / EBI_AD12 / USCI0_DAT0 / SPI0_MISO / UART3_TXD
91	PD.0 / EBI_AD13 / USCI0_CLK / SPI0_MOSI / UART3_RXD / TM2
92	PD.13 / EBI_AD10 / SPI0_I2SMCLK
93	PA.12 / UART4_TXD / I2C1_SCL / BPWM1_CH2
94	PA.13 / UART4_RXD / I2C1_SDA / BPWM1_CH3
95	PA.14 / UART0_TXD / BPWM1_CH4
96	PA.15 / UART0_RXD / BPWM1_CH5
97	PE.7 / UART5_TXD / PWM0_CH0 / BPWM0_CH5
98	PE.6 / USCI0_CTL0 / UART5_RXD / PWM0_CH1 / BPWM0_CH4
99	PE.5 / EBI_nRD / USCI0_CTL1 / PWM0_CH2 / BPWM0_CH3
100	PE.4 / EBI_nWR / USCI0_DAT1 / PWM0_CH3 / BPWM0_CH2
101	PE.3 / EBI_MCLK / USCI0_DAT0 / PWM0_CH4 / BPWM0_CH1
102	PE.2 / EBI_ALE / USCI0_CLK / PWM0_CH5 / BPWM0_CH0
103	VSS
104	V_{DD}

Pin	M031KG8AE Pin Function
105	PE.1 / EBI_AD10 / QSPI0_MISO0 / UART3_TXD / I2C1_SCL / UART4_nCTS
106	PE.0 / EBI_AD11 / QSPI0_MOSI0 / UART3_RXD / I2C1_SDA / UART4_nRTS
107	PH.8 / EBI_AD12 / QSPI0_CLK / UART3_nRTS / UART1_TXD
108	PH.9 / EBI_AD13 / QSPI0_SS / UART3_nCTS / UART1_RXD
109	PH.10 / EBI_AD14 / QSPI0_MISO1 / UART4_TXD / UART0_TXD
110	PH.11 / EBI_AD15 / QSPI0_MOSI1 / UART4_RXD / UART0_RXD / PWM0_CH5
111	PD.14 / EBI_nCS0 / SPI0_I2SMCLK / USCI0_CTL0 / PWM0_CH4
112	VSS
113	LDO_CAP
114	V_{DD}
115	PC.14 / EBI_AD11 / SPI0_I2SMCLK / USCI0_CTL0 / QSPI0_CLK / TM1
116	PB.15 / ADC0_CH15 / EBI_AD12 / SPI0_SS / USCI0_CTL1 / UART0_nCTS / UART3_TXD / PWM1_CH0 / TM0_EXT / PWM0_BRAKE1
117	PB.14 / ADC0_CH14 / EBI_AD13 / SPI0_CLK / USCI0_DAT1 / UART0_nRTS / UART3_RXD / PWM1_CH1 / TM1_EXT / CLKO
118	PB.13 / ADC0_CH13 / ACMP0_P3 / ACMP1_P3 / EBI_AD14 / SPI0_MISO / USCI0_DAT0 / UART0_TXD / UART3_nRTS / PWM1_CH2 / TM2_EXT
119	PB.12 / ADC0_CH12 / ACMP0_P2 / ACMP1_P2 / EBI_AD15 / SPI0_MOSI / USCI0_CLK / UART0_RXD / UART3_nCTS / PWM1_CH3 / TM3_EXT
120	AV_{DD}
121	V_{REF}
122	AVSS
123	PB.11 / ADC0_CH11 / EBI_ADR16 / UART0_nCTS / UART4_TXD / I2C1_SCL / SPI0_I2SMCLK / BPWM1_CH0
124	PB.10 / ADC0_CH10 / EBI_ADR17 / USCI1_CTL0 / UART0_nRTS / UART4_RXD / I2C1_SDA / BPWM1_CH1
125	PB.9 / ADC0_CH9 / EBI_ADR18 / USCI1_CTL1 / UART0_TXD / UART1_nCTS / BPWM1_CH2
126	PB.8 / ADC0_CH8 / EBI_ADR19 / USCI1_CLK / UART0_RXD / UART1_nRTS / BPWM1_CH3
127	PB.7 / ADC0_CH7 / EBI_nWRL / USCI1_DAT0 / UART1_TXD / EBI_nCS0 / BPWM1_CH4 / PWM1_BRAKE0 / PWM1_CH4 / INT5 / ACMP0_O
128	PB.6 / ADC0_CH6 / EBI_nWRH / USCI1_DAT1 / UART1_RXD / EBI_nCS1 / BPWM1_CH5 / PWM1_BRAKE1 / PWM1_CH5 / INT4 / ACMP1_O

Table 4.1-21 M031KG8AE Multi-function Pin Table

M031KIAAE

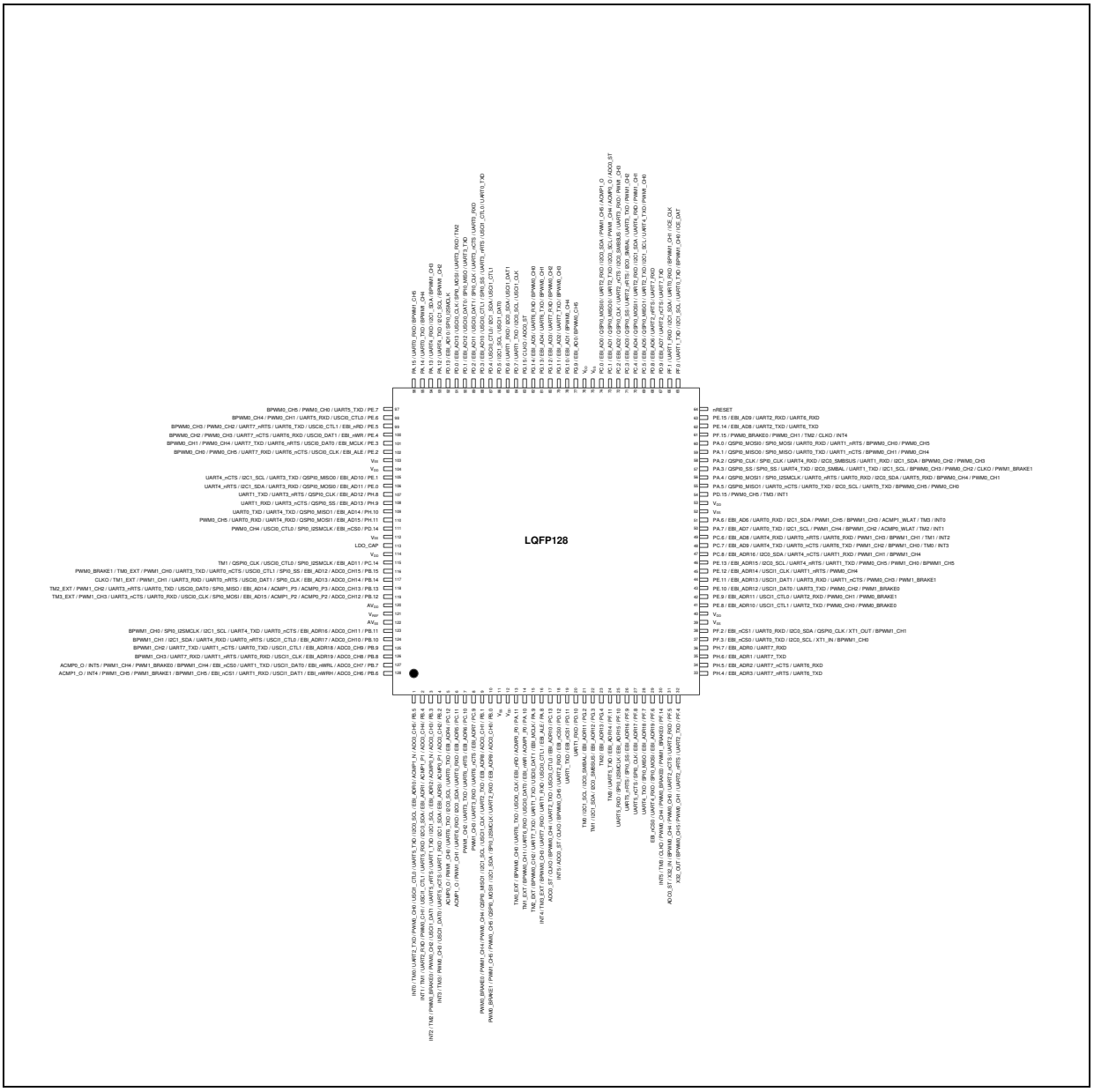

Figure 4.1-28 M031KIAAE Multi-function Pin Diagram

Pin	M031KIAAE Pin Function
1	PB.5 / ADC0_CH5 / ACMP1_N / EBI_ADR0 / I2C0_SCL / UART5_TXD / USCI1_CTL0 / PWM0_CH0 / UART2_TXD / TM0 / INT0
2	PB.4 / ADC0_CH4 / ACMP1_P1 / EBI_ADR1 / I2C0_SDA / UART5_RXD / USCI1_CTL1 / PWM0_CH1 / UART2_RXD / TM1 / INT1
3	PB.3 / ADC0_CH3 / ACMP0_N / EBI_ADR2 / I2C1_SCL / UART1_TXD / UART5_nRTS / USCI1_DAT1 / PWM0_CH2 / PWM0_BRAKE0 / TM2 / INT2
4	PB.2 / ADC0_CH2 / ACMP0_P1 / EBI_ADR3 / I2C1_SDA / UART1_RXD / UART5_nCTS / USCI1_DAT0 / PWM0_CH3 / TM3 / INT3

Pin	M031KIAAE Pin Function
5	PC.12 / EBI_ADR4 / UART0_TXD / I2C0_SCL / UART6_TXD / PWM1_CH0 / ACMP0_O
6	PC.11 / EBI_ADR5 / UART0_RXD / I2C0_SDA / UART6_RXD / PWM1_CH1 / ACMP1_O
7	PC.10 / EBI_ADR6 / UART6_nRTS / UART3_TXD / PWM1_CH2
8	PC.9 / EBI_ADR7 / UART6_nCTS / UART3_RXD / PWM1_CH3
9	PB.1 / ADC0_CH1 / EBI_ADR8 / UART2_TXD / USCI1_CLK / I2C1_SCL / QSPI0_MISO1 / PWM0_CH4 / PWM1_CH4 / PWM0_BRAKE0
10	PB.0 / ADC0_CH0 / EBI_ADR9 / UART2_RXD / SPI0_I2SMCLK / I2C1_SDA / QSPI0_MOSI1 / PWM0_CH5 / PWM1_CH5 / PWM0_BRAKE1
11	VSS
12	V_{DD}
13	PA.11 / ACMP0_P0 / EBI_nRD / USCI0_CLK / UART6_TXD / BPWM0_CH0 / TM0_EXT
14	PA.10 / ACMP1_P0 / EBI_nWR / USCI0_DAT0 / UART6_RXD / BPWM0_CH1 / TM1_EXT
15	PA.9 / EBI_MCLK / USCI0_DAT1 / UART1_TXD / UART7_TXD / BPWM0_CH2 / TM2_EXT
16	PA.8 / EBI_ALE / USCI0_CTL1 / UART1_RXD / UART7_RXD / BPWM0_CH3 / TM3_EXT / INT4
17	PC.13 / EBI_ADR10 / USCI0_CTL0 / UART2_TXD / BPWM0_CH4 / CLKO / ADC0_ST
18	PD.12 / EBI_nCS0 / UART2_RXD / BPWM0_CH5 / CLKO / ADC0_ST / INT5
19	PD.11 / EBI_nCS1 / UART1_TXD
20	PD.10 / UART1_RXD
21	PG.2 / EBI_ADR11 / I2C0_SMBAL / I2C1_SCL / TM0
22	PG.3 / EBI_ADR12 / I2C0_SMBSUS / I2C1_SDA / TM1
23	PG.4 / EBI_ADR13 / TM2
24	PF.11 / EBI_ADR14 / UART5_TXD / TM3
25	PF.10 / EBI_ADR15 / SPI0_I2SMCLK / UART5_RXD
26	PF.9 / EBI_ADR16 / SPI0_SS / UART5_nRTS
27	PF.8 / EBI_ADR17 / SPI0_CLK / UART5_nCTS
28	PF.7 / EBI_ADR18 / SPI0_MISO / UART4_TXD
29	PF.6 / EBI_ADR19 / SPI0_MOSI / UART4_RXD / EBI_nCS0
30	PF.14 / PWM1_BRAKE0 / PWM0_BRAKE0 / PWM0_CH4 / CLKO / TM3 / INT5
31	PF.5 / UART2_RXD / UART2_nCTS / PWM0_CH0 / BPWM0_CH4 / X32_IN / ADC0_ST
32	PF.4 / UART2_TXD / UART2_nRTS / PWM0_CH1 / BPWM0_CH5 / X32_OUT
33	PH.4 / EBI_ADR3 / UART7_nRTS / UART6_TXD
34	PH.5 / EBI_ADR2 / UART7_nCTS / UART6_RXD
35	PH.6 / EBI_ADR1 / UART7_TXD
36	PH.7 / EBI_ADR0 / UART7_RXD
37	PF.3 / EBI_nCS0 / UART0_TXD / I2C0_SCL / XT1_IN / BPWM1_CH0

Pin	M031KIAAE Pin Function
38	PF.2 / EBI_nCS1 / UART0_RXD / I2C0_SDA / QSPI0_CLK / XT1_OUT / BPWM1_CH1
39	VSS
40	V_{DD}
41	PE.8 / EBI_ADR10 / USCI1_CTL1 / UART2_TXD / PWM0_CH0 / PWM0_BRAKE0
42	PE.9 / EBI_ADR11 / USCI1_CTL0 / UART2_RXD / PWM0_CH1 / PWM0_BRAKE1
43	PE.10 / EBI_ADR12 / USCI1_DAT0 / UART3_TXD / PWM0_CH2 / PWM1_BRAKE0
44	PE.11 / EBI_ADR13 / USCI1_DAT1 / UART3_RXD / UART1_nCTS / PWM0_CH3 / PWM1_BRAKE1
45	PE.12 / EBI_ADR14 / USCI1_CLK / UART1_nRTS / PWM0_CH4
46	PE.13 / EBI_ADR15 / I2C0_SCL / UART4_nRTS / UART1_TXD / PWM0_CH5 / PWM1_CH0 / BPWM1_CH5
47	PC.8 / EBI_ADR16 / I2C0_SDA / UART4_nCTS / UART1_RXD / PWM1_CH1 / BPWM1_CH4
48	PC.7 / EBI_AD9 / UART4_TXD / UART0_nCTS / UART6_TXD / PWM1_CH2 / BPWM1_CH0 / TM0 / INT3
49	PC.6 / EBI_AD8 / UART4_RXD / UART0_nRTS / UART6_RXD / PWM1_CH3 / BPWM1_CH1 / TM1 / INT2
50	PA.7 / EBI_AD7 / UART0_TXD / I2C1_SCL / PWM1_CH4 / BPWM1_CH2 / ACMP0_WLAT / TM2 / INT1
51	PA.6 / EBI_AD6 / UART0_RXD / I2C1_SDA / PWM1_CH5 / BPWM1_CH3 / ACMP1_WLAT / TM3 / INT0
52	VSS
53	V_{DD}
54	PD.15 / PWM0_CH5 / TM3 / INT1
55	PA.5 / QSPI0_MISO1 / UART0_nCTS / UART0_TXD / I2C0_SCL / UART5_TXD / BPWM0_CH5 / PWM0_CH0
56	PA.4 / QSPI0_MOSI1 / SPI0_I2SMCLK / UART0_nRTS / UART0_RXD / I2C0_SDA / UART5_RXD / BPWM0_CH4 / PWM0_CH1
57	PA.3 / QSPI0_SS / SPI0_SS / UART4_TXD / I2C0_SMBAL / UART1_TXD / I2C1_SCL / BPWM0_CH3 / PWM0_CH2 / CLKO / PWM1_BRAKE1
58	PA.2 / QSPI0_CLK / SPI0_CLK / UART4_RXD / I2C0_SMBSUS / UART1_RXD / I2C1_SDA / BPWM0_CH2 / PWM0_CH3
59	PA.1 / QSPI0_MISO0 / SPI0_MISO / UART0_TXD / UART1_nCTS / BPWM0_CH1 / PWM0_CH4
60	PA.0 / QSPI0_MOSI0 / SPI0_MOSI / UART0_RXD / UART1_nRTS / BPWM0_CH0 / PWM0_CH5
61	PF.15 / PWM0_BRAKE0 / PWM0_CH1 / TM2 / CLKO / INT4
62	PE.14 / EBI_AD8 / UART2_TXD / UART6_TXD
63	PE.15 / EBI_AD9 / UART2_RXD / UART6_RXD
64	nRESET
65	PF.0 / UART1_TXD / I2C1_SCL / UART0_TXD / BPWM1_CH0 / ICE_DAT
66	PF.1 / UART1_RXD / I2C1_SDA / UART0_RXD / BPWM1_CH1 / ICE_CLK
67	PD.9 / EBI_AD7 / UART2_nCTS / UART7_TXD
68	PD.8 / EBI_AD6 / UART2_nRTS / UART7_RXD
69	PC.5 / EBI_AD5 / QSPI0_MISO1 / UART2_TXD / I2C1_SCL / UART4_TXD / PWM1_CH0
70	PC.4 / EBI_AD4 / QSPI0_MOSI1 / UART2_RXD / I2C1_SDA / UART4_RXD / PWM1_CH1

Pin	M031KIAAE Pin Function
71	PC.3 / EBI_AD3 / QSPI0_SS / UART2_nRTS / I2C0_SMBAL / UART3_TXD / PWM1_CH2
72	PC.2 / EBI_AD2 / QSPI0_CLK / UART2_nCTS / I2C0_SMBSUS / UART3_RXD / PWM1_CH3
73	PC.1 / EBI_AD1 / QSPI0_MISO0 / UART2_TXD / I2C0_SCL / PWM1_CH4 / ACMP0_O / ADC0_ST
74	PC.0 / EBI_AD0 / QSPI0_MOSI0 / UART2_RXD / I2C0_SDA / PWM1_CH5 / ACMP1_O
75	VSS
76	V_{DD}
77	PG.9 / EBI_AD0 / BPWM0_CH5
78	PG.10 / EBI_AD1 / BPWM0_CH4
79	PG.11 / EBI_AD2 / UART7_TXD / BPWM0_CH3
80	PG.12 / EBI_AD3 / UART7_RXD / BPWM0_CH2
81	PG.13 / EBI_AD4 / UART6_TXD / BPWM0_CH1
82	PG.14 / EBI_AD5 / UART6_RXD / BPWM0_CH0
83	PG.15 / CLKO / ADC0_ST
84	PD.7 / UART1_TXD / I2C0_SCL / USCI1_CLK
85	PD.6 / UART1_RXD / I2C0_SDA / USCI1_DAT1
86	PD.5 / I2C1_SCL / USCI1_DAT0
87	PD.4 / USCI0_CTL0 / I2C1_SDA / USCI1_CTL1
88	PD.3 / EBI_AD10 / USCI0_CTL1 / SPI0_SS / UART3_nRTS / USCI1_CTL0 / UART0_TXD
89	PD.2 / EBI_AD11 / USCI0_DAT1 / SPI0_CLK / UART3_nCTS / UART0_RXD
90	PD.1 / EBI_AD12 / USCI0_DAT0 / SPI0_MISO / UART3_TXD
91	PD.0 / EBI_AD13 / USCI0_CLK / SPI0_MOSI / UART3_RXD / TM2
92	PD.13 / EBI_AD10 / SPI0_I2SMCLK
93	PA.12 / UART4_TXD / I2C1_SCL / BPWM1_CH2
94	PA.13 / UART4_RXD / I2C1_SDA / BPWM1_CH3
95	PA.14 / UART0_TXD / BPWM1_CH4
96	PA.15 / UART0_RXD / BPWM1_CH5
97	PE.7 / UART5_TXD / PWM0_CH0 / BPWM0_CH5
98	PE.6 / USCI0_CTL0 / UART5_RXD / PWM0_CH1 / BPWM0_CH4
99	PE.5 / EBI_nRD / USCI0_CTL1 / UART6_TXD / UART7_nRTS / PWM0_CH2 / BPWM0_CH3
100	PE.4 / EBI_nWR / USCI0_DAT1 / UART6_RXD / UART7_nCTS / PWM0_CH3 / BPWM0_CH2
101	PE.3 / EBI_MCLK / USCI0_DAT0 / UART6_nRTS / UART7_TXD / PWM0_CH4 / BPWM0_CH1
102	PE.2 / EBI_ALE / USCI0_CLK / UART6_nCTS / UART7_RXD / PWM0_CH5 / BPWM0_CH0
103	VSS
104	V_{DD}

Pin	M031KIAAE Pin Function
105	PE.1 / EBI_AD10 / QSPI0_MISO0 / UART3_TXD / I2C1_SCL / UART4_nCTS
106	PE.0 / EBI_AD11 / QSPI0_MOSI0 / UART3_RXD / I2C1_SDA / UART4_nRTS
107	PH.8 / EBI_AD12 / QSPI0_CLK / UART3_nRTS / UART1_TXD
108	PH.9 / EBI_AD13 / QSPI0_SS / UART3_nCTS / UART1_RXD
109	PH.10 / EBI_AD14 / QSPI0_MISO1 / UART4_TXD / UART0_TXD
110	PH.11 / EBI_AD15 / QSPI0_MOSI1 / UART4_RXD / UART0_RXD / PWM0_CH5
111	PD.14 / EBI_nCS0 / SPI0_I2SMCLK / USCI0_CTL0 / PWM0_CH4
112	VSS
113	LDO_CAP
114	V_{DD}
115	PC.14 / EBI_AD11 / SPI0_I2SMCLK / USCI0_CTL0 / QSPI0_CLK / TM1
116	PB.15 / ADC0_CH15 / EBI_AD12 / SPI0_SS / USCI0_CTL1 / UART0_nCTS / UART3_TXD / PWM1_CH0 / TM0_EXT / PWM0_BRAKE1
117	PB.14 / ADC0_CH14 / EBI_AD13 / SPI0_CLK / USCI0_DAT1 / UART0_nRTS / UART3_RXD / PWM1_CH1 / TM1_EXT / CLKO
118	PB.13 / ADC0_CH13 / ACMP0_P3 / ACMP1_P3 / EBI_AD14 / SPI0_MISO / USCI0_DAT0 / UART0_TXD / UART3_nRTS / PWM1_CH2 / TM2_EXT
119	PB.12 / ADC0_CH12 / ACMP0_P2 / ACMP1_P2 / EBI_AD15 / SPI0_MOSI / USCI0_CLK / UART0_RXD / UART3_nCTS / PWM1_CH3 / TM3_EXT
120	AV_{DD}
121	V_{REF}
122	AVSS
123	PB.11 / ADC0_CH11 / EBI_ADR16 / UART0_nCTS / UART4_TXD / I2C1_SCL / SPI0_I2SMCLK / BPWM1_CH0
124	PB.10 / ADC0_CH10 / EBI_ADR17 / USCI1_CTL0 / UART0_nRTS / UART4_RXD / I2C1_SDA / BPWM1_CH1
125	PB.9 / ADC0_CH9 / EBI_ADR18 / USCI1_CTL1 / UART0_TXD / UART1_nCTS / UART7_TXD / BPWM1_CH2
126	PB.8 / ADC0_CH8 / EBI_ADR19 / USCI1_CLK / UART0_RXD / UART1_nRTS / UART7_RXD / BPWM1_CH3
127	PB.7 / ADC0_CH7 / EBI_nWRL / USCI1_DAT0 / UART1_TXD / EBI_nCS0 / BPWM1_CH4 / PWM1_BRAKE0 / PWM1_CH4 / INT5 / ACMP0_O
128	PB.6 / ADC0_CH6 / EBI_nWRH / USCI1_DAT1 / UART1_RXD / EBI_nCS1 / BPWM1_CH5 / PWM1_BRAKE1 / PWM1_CH5 / INT4 / ACMP1_O

Table 4.1-22 M031KIAAE Multi-function Pin Table

4.1.3 M032 Series Pin Diagram

4.1.3.1 M032 Series TSSOP 20-Pin Diagram

Corresponding Part Number: M032FC1AE

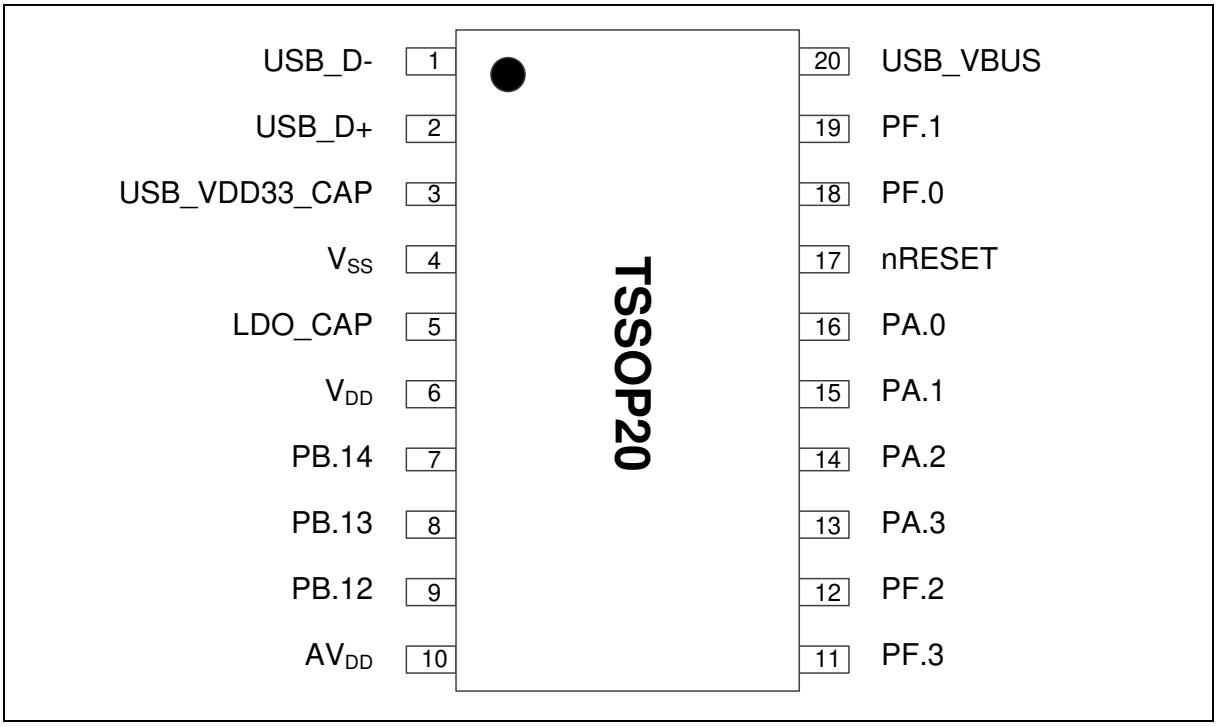

Figure 4.1-29 M032 Series TSSOP 20-pin Diagram

4.1.3.2 M032 Series TSSOP 28-Pin Diagram

Corresponding Part Number: M032EC1AE

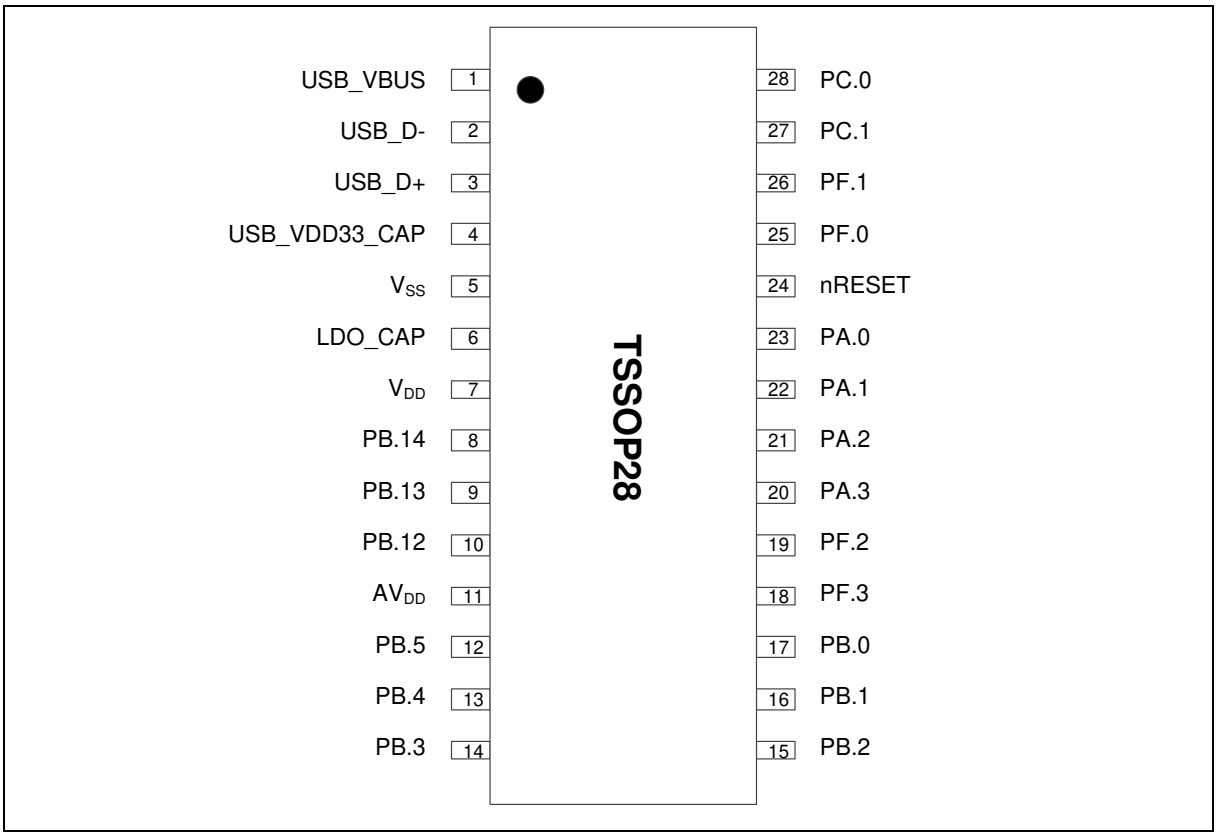

Figure 4.1-30 M032 Series TSSOP 28-pin Diagram

4.1.3.3 M032 Series QFN 33-Pin Diagram

Corresponding Part Number: M032TC1AE, M032TD2AE

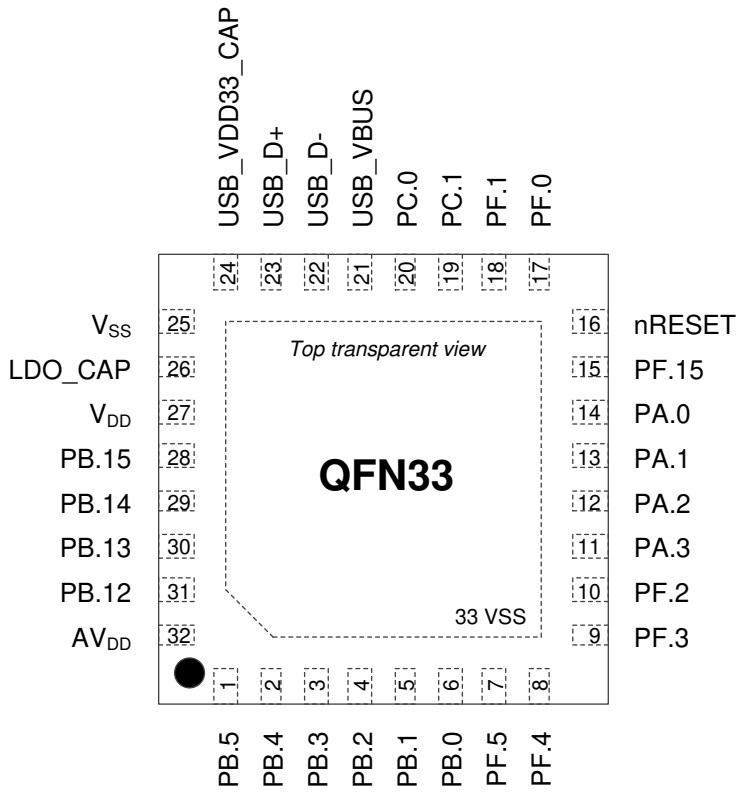

Figure 4.1-31 M032 Series QFN 33-pin Diagram

4.1.3.4 M032 Series LQFP 48-Pin Diagram

Corresponding Part Number: M032LC2AE, M032LD2AE ,M032LE3AE, M032LG6AE, M032LG8AE

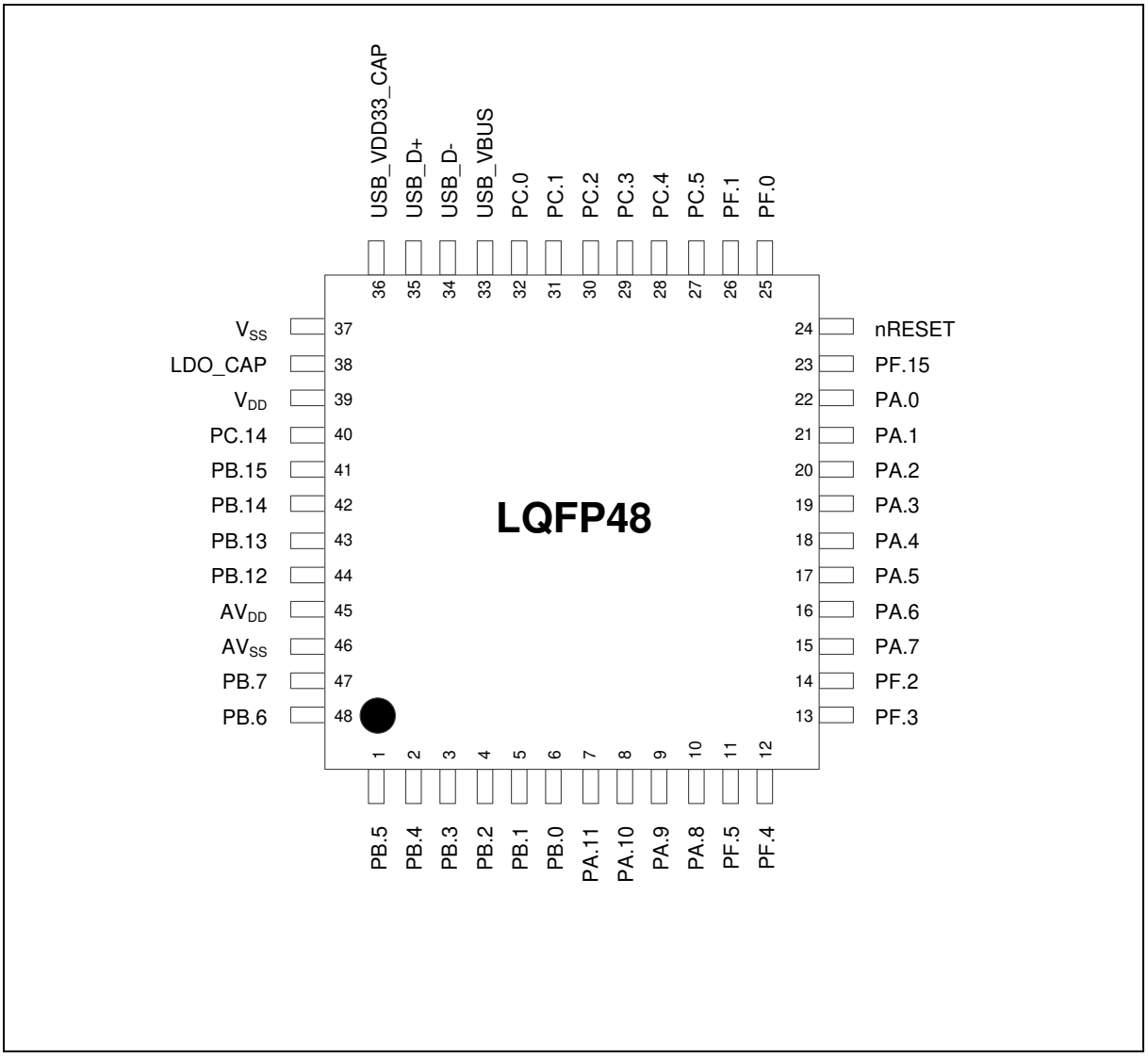

Figure 4.1-32 M032 Series LQFP 48-pin Diagram

4.1.3.5 M032 Series LQFP 64-Pin Diagram

Corresponding Part Number: M032SE3AE, M032SG6AE, M032SG8AE, M032SIAAE

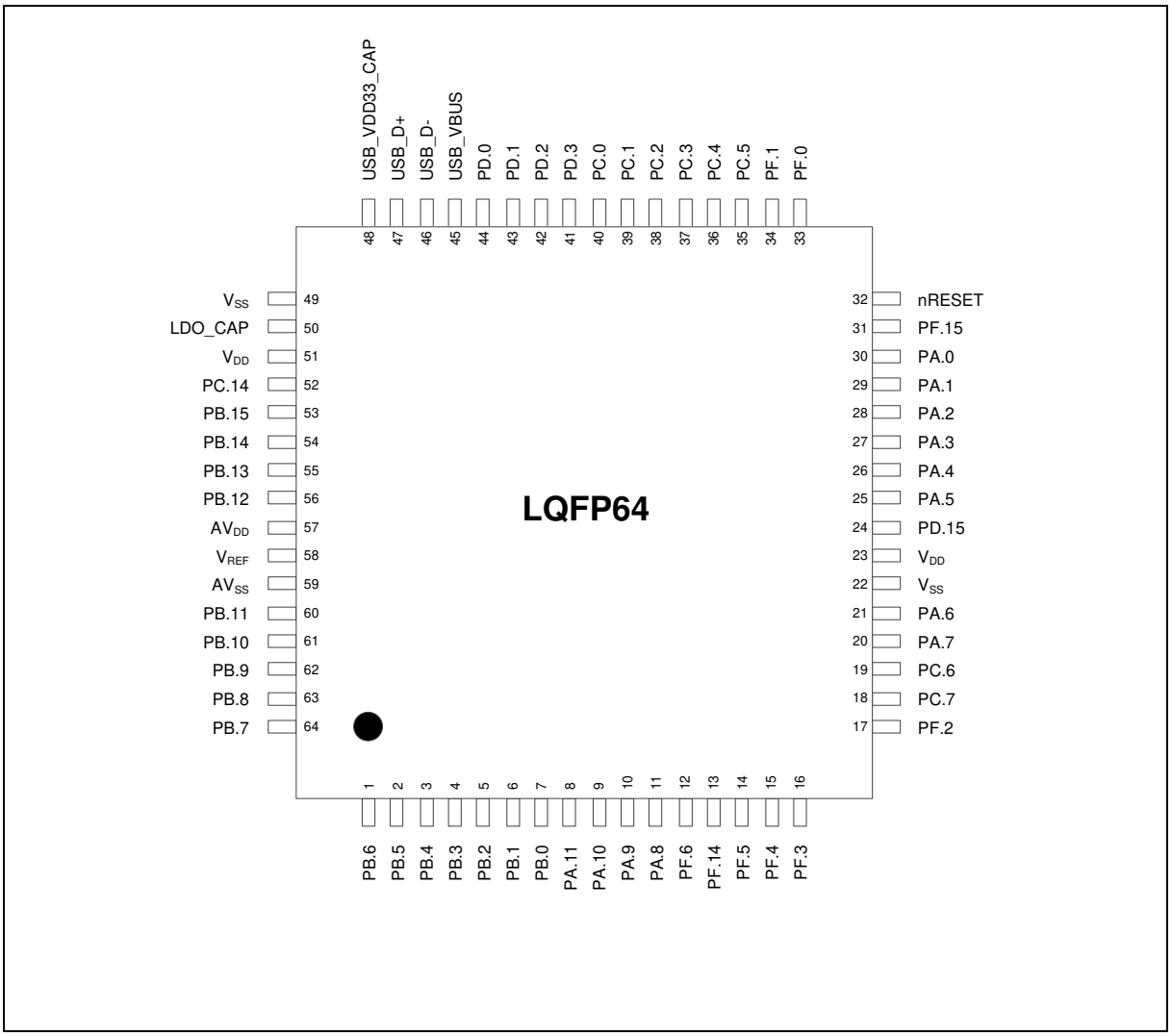

Figure 4.1-33 M032 Series LQFP 64-pin Diagram

4.1.3.6 M032 Series LQFP 128-Pin Diagram

Corresponding Part Number: M032KG6AE, M032KG8AE, M032KIAAE

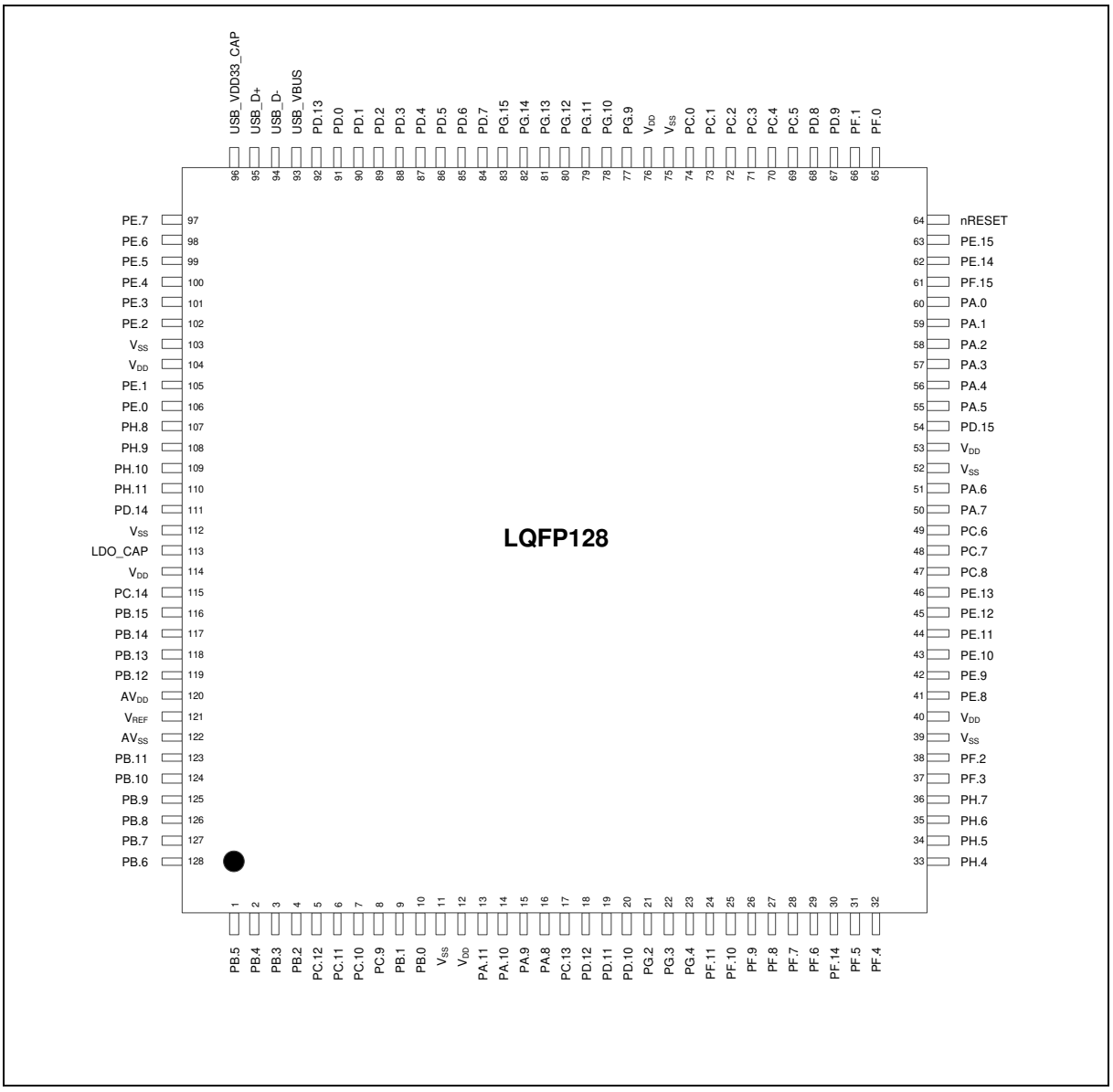

Figure 4.1-34 M032 Series LQFP 128-pin Diagram

4.1.4 M032 Series Multi-function Pin Diagram

4.1.4.1 M032 Series TSSOP 20-Pin Multi-function Pin Diagram

Corresponding Part Number: M032FC1AE

M032FC1AE

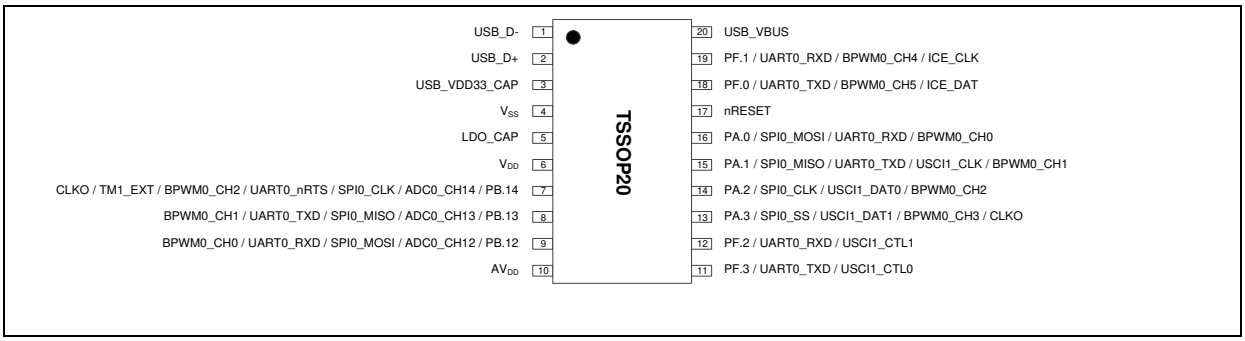

Figure 4.1-35 M032FC1AE Multi-function Pin Diagram

Pin	M032FC1AE Pin Function
1	USB_D-
2	USB_D+
3	USB_V_{DD}33_CAP
4	VSS
5	LDO_CAP
6	V_{DD}
7	PB.14 / ADC0_CH14 / SPI0_CLK / UART0_nRTS / BPWM0_CH2 / TM1_EXT / CLKO
8	PB.13 / ADC0_CH13 / SPI0_MISO / UART0_TXD / BPWM0_CH1
9	PB.12 / ADC0_CH12 / SPI0_MOSI / UART0_RXD / BPWM0_CH0
10	AV_{DD}
11	PF.3 / UART0_TXD / USCI1_CTL0
12	PF.2 / UART0_RXD / USCI1_CTL1
13	PA.3 / SPI0_SS / USCI1_DAT1 / BPWM0_CH3 / CLKO
14	PA.2 / SPI0_CLK / USCI1_DAT0 / BPWM0_CH2
15	PA.1 / SPI0_MISO / UART0_TXD / USCI1_CLK / BPWM0_CH1
16	PA.0 / SPI0_MOSI / UART0_RXD / BPWM0_CH0
17	nRESET
18	PF.0 / UART0_TXD / BPWM0_CH5 / ICE_DAT
19	PF.1 / UART0_RXD / BPWM0_CH4 / ICE_CLK
20	USB_VBUS

Table 4.1-23 M032FC1AE Multi-function Pin Table

4.1.4.2 M032 Series TSSOP 28-Pin Multi-function Pin Diagram

Corresponding Part Number: M032EC1AE

M032EC1AE

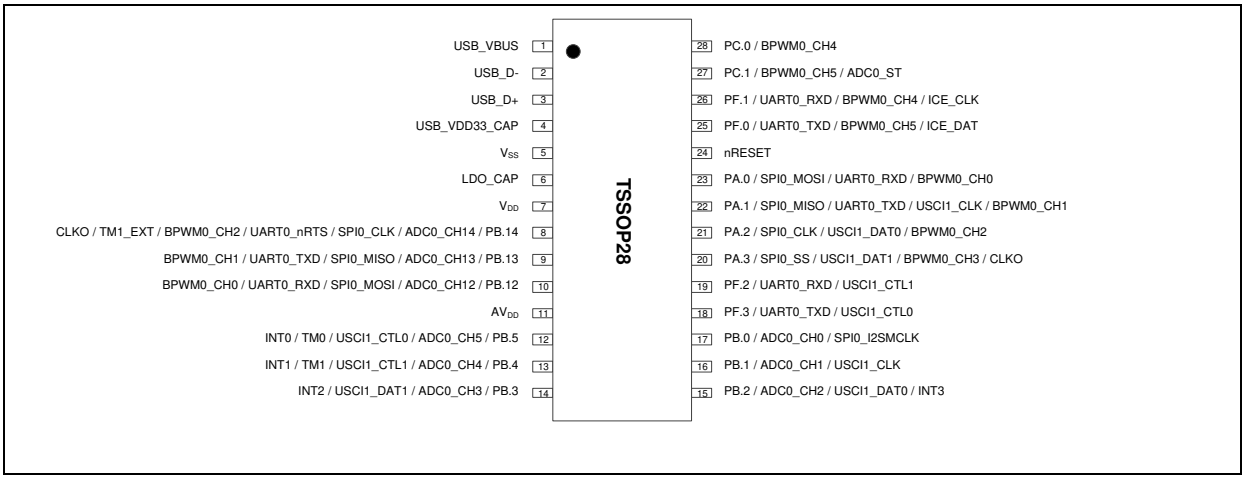

Figure 4.1-36 M032EC1AE Multi-function Pin Diagram

Pin	M032EC1AE Pin Function
1	USB_VBUS
2	USB_D-
3	USB_D+
4	USB_V_{DD}33_CAP
5	VSS
6	LDO_CAP
7	V_{DD}
8	PB.14 / ADC0_CH14 / SPI0_CLK / UART0_nRTS / BPWM0_CH2 / TM1_EXT / CLKO
9	PB.13 / ADC0_CH13 / SPI0_MISO / UART0_TXD / BPWM0_CH1
10	PB.12 / ADC0_CH12 / SPI0_MOSI / UART0_RXD / BPWM0_CH0
11	AV_{DD}
12	PB.5 / ADC0_CH5 / USCI1_CTL0 / TM0 / INT0
13	PB.4 / ADC0_CH4 / USCI1_CTL1 / TM1 / INT1
14	PB.3 / ADC0_CH3 / USCI1_DAT1 / INT2
15	PB.2 / ADC0_CH2 / USCI1_DAT0 / INT3
16	PB.1 / ADC0_CH1 / USCI1_CLK
17	PB.0 / ADC0_CH0 / SPI0_I2SMCLK
18	PF.3 / UART0_TXD / USCI1_CTL0
19	PF.2 / UART0_RXD / USCI1_CTL1

Pin	M032EC1AE Pin Function
20	PA.3 / SPI0_SS / USCI1_DAT1 / BPWM0_CH3 / CLKO
21	PA.2 / SPI0_CLK / USCI1_DAT0 / BPWM0_CH2
22	PA.1 / SPI0_MISO / UART0_TXD / USCI1_CLK / BPWM0_CH1
23	PA.0 / SPI0_MOSI / UART0_RXD / BPWM0_CH0
24	nRESET
25	PF.0 / UART0_TXD / BPWM0_CH5 / ICE_DAT
26	PF.1 / UART0_RXD / BPWM0_CH4 / ICE_CLK
27	PC.1 / BPWM0_CH5 / ADC0_ST
28	PC.0 / BPWM0_CH4

Table 4.1-24 M032EC1AE Multi-function Pin Table

4.1.4.3 M032 Series QFN 33-Pin Multi-function Pin Diagram

Corresponding Part Number: M032TC1AE, M032TD2AE

M032TC1AE

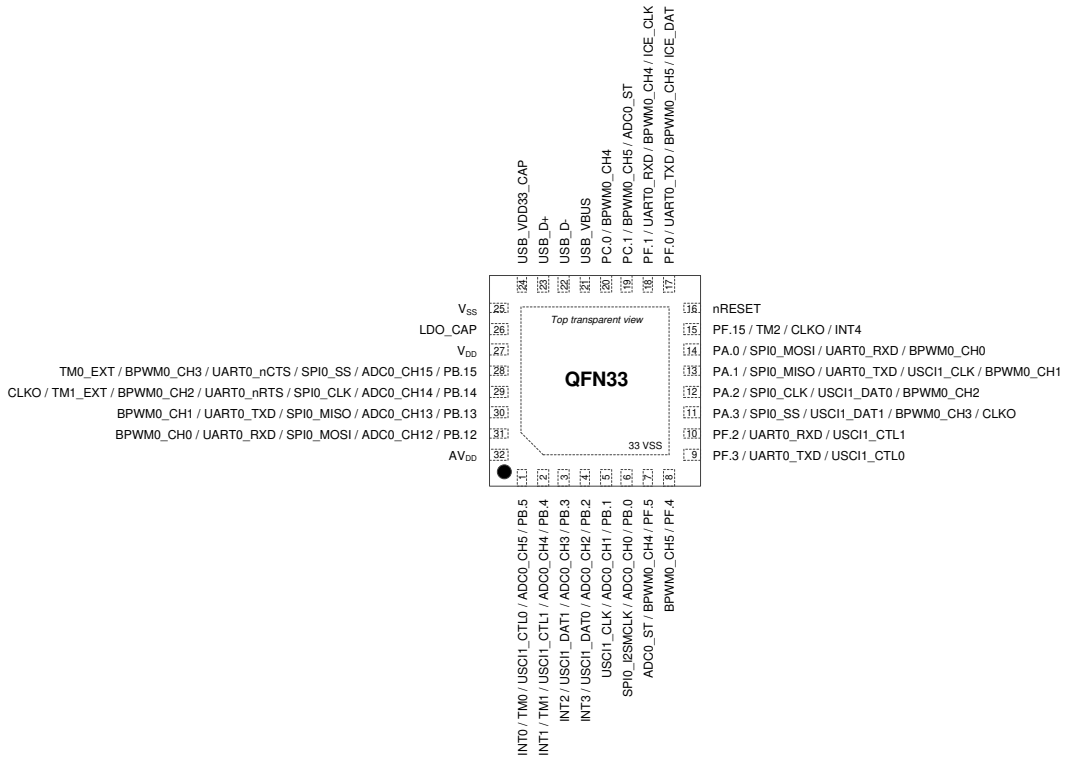

Figure 4.1-37 M032TC1AE Multi-function Pin Diagram

Pin	M032TC1AE Pin Function
1	PB.5 / ADC0_CH5 / USCI1_CTL0 / TM0 / INT0
2	PB.4 / ADC0_CH4 / USCI1_CTL1 / TM1 / INT1
3	PB.3 / ADC0_CH3 / USCI1_DAT1 / INT2

Pin	M032TC1AE Pin Function
4	PB.2 / ADC0_CH2 / USCI1_DAT0 / INT3
5	PB.1 / ADC0_CH1 / USCI1_CLK
6	PB.0 / ADC0_CH0 / SPI0_I2SMCLK
7	PF.5 / BPWM0_CH4 / ADC0_ST
8	PF.4 / BPWM0_CH5
9	PF.3 / UART0_TXD / USCI1_CTL0
10	PF.2 / UART0_RXD / USCI1_CTL1
11	PA.3 / SPI0_SS / USCI1_DAT1 / BPWM0_CH3 / CLKO
12	PA.2 / SPI0_CLK / USCI1_DAT0 / BPWM0_CH2
13	PA.1 / SPI0_MISO / UART0_TXD / USCI1_CLK / BPWM0_CH1
14	PA.0 / SPI0_MOSI / UART0_RXD / BPWM0_CH0
15	PF.15 / CLKO / INT4
16	nRESET
17	PF.0 / UART0_TXD / BPWM0_CH5 / ICE_DAT
18	PF.1 / UART0_RXD / BPWM0_CH4 / ICE_CLK
19	PC.1 / BPWM0_CH5 / ADC0_ST
20	PC.0 / BPWM0_CH4
21	USB_VBUS
22	USB_D-
23	USB_D+
24	USB_V_{DD}33_CAP
25	VSS
26	LDO_CAP
27	V_{DD}
28	PB.15 / ADC0_CH15 / SPI0_SS / UART0_nCTS / BPWM0_CH3 / TM0_EXT
29	PB.14 / ADC0_CH14 / SPI0_CLK / UART0_nRTS / BPWM0_CH2 / TM1_EXT / CLKO
30	PB.13 / ADC0_CH13 / SPI0_MISO / UART0_TXD / BPWM0_CH1
31	PB.12 / ADC0_CH12 / SPI0_MOSI / UART0_RXD / BPWM0_CH0
32	AV_{DD}

Table 4.1-25 M032TC1AE Multi-function Pin Table

M032TD2AE

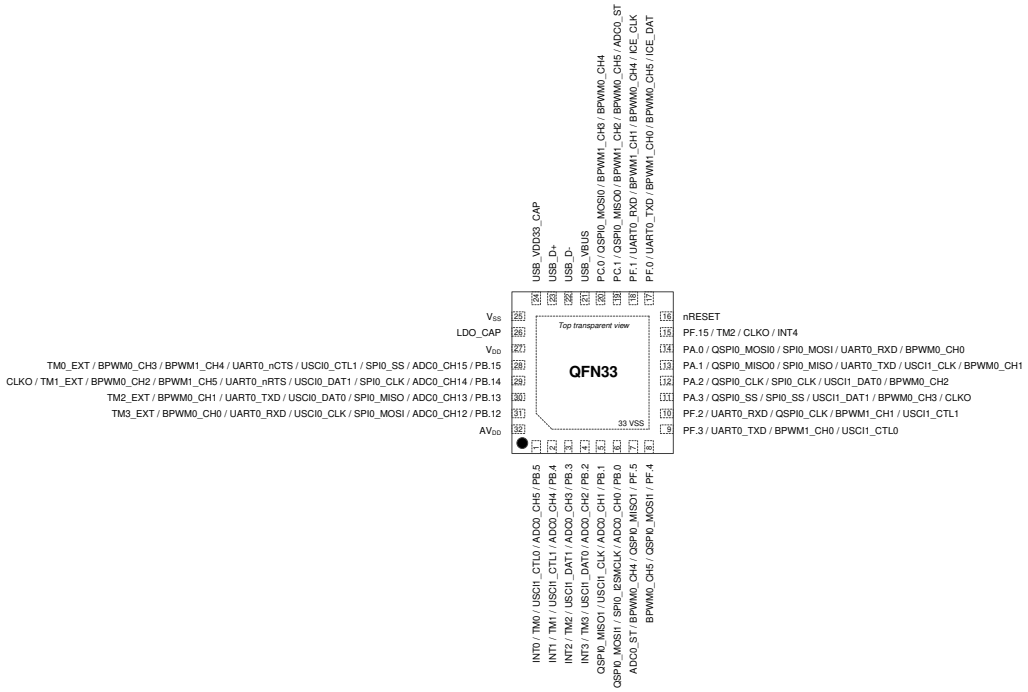

Figure 4.1-38 M032TD2AE Multi-function Pin Diagram

Pin	M032TD2AE Pin Function
1	PB.5 / ADC0_CH5 / USCI1_CTL0 / TM0 / INT0
2	PB.4 / ADC0_CH4 / USCI1_CTL1 / TM1 / INT1
3	PB.3 / ADC0_CH3 / USCI1_DAT1 / TM2 / INT2
4	PB.2 / ADC0_CH2 / USCI1_DAT0 / TM3 / INT3
5	PB.1 / ADC0_CH1 / USCI1_CLK / QSPI0_MISO1
6	PB.0 / ADC0_CH0 / SPI0_I2SMCLK / QSPI0_MOSI1

Pin	M032TD2AE Pin Function
7	PF.5 / QSPI0_MISO1 / BPWM0_CH4 / ADC0_ST
8	PF.4 / QSPI0_MOSI1 / BPWM0_CH5
9	PF.3 / UART0_TXD / BPWM1_CH0 / USCI1_CTL0
10	PF.2 / UART0_RXD / QSPI0_CLK / BPWM1_CH1 / USCI1_CTL1
11	PA.3 / QSPI0_SS / SPI0_SS / USCI1_DAT1 / BPWM0_CH3 / CLKO
12	PA.2 / QSPI0_CLK / SPI0_CLK / USCI1_DAT0 / BPWM0_CH2
13	PA.1 / QSPI0_MISO0 / SPI0_MISO / UART0_TXD / USCI1_CLK / BPWM0_CH1
14	PA.0 / QSPI0_MOSI0 / SPI0_MOSI / UART0_RXD / BPWM0_CH0
15	PF.15 / TM2 / CLKO / INT4
16	nRESET
17	PF.0 / UART0_TXD / BPWM1_CH0 / BPWM0_CH5 / ICE_DAT
18	PF.1 / UART0_RXD / BPWM1_CH1 / BPWM0_CH4 / ICE_CLK
19	PC.1 / QSPI0_MISO0 / BPWM1_CH2 / BPWM0_CH5 / ADC0_ST
20	PC.0 / QSPI0_MOSI0 / BPWM1_CH3 / BPWM0_CH4
21	USB_VBUS
22	USB_D-
23	USB_D+
24	USB_V_{DD}33_CAP
25	VSS
26	LDO_CAP
27	V_{DD}
28	PB.15 / ADC0_CH15 / SPI0_SS / USCI0_CTL1 / UART0_nCTS / BPWM1_CH4 / BPWM0_CH3 / TM0_EXT
29	PB.14 / ADC0_CH14 / SPI0_CLK / USCI0_DAT1 / UART0_nRTS / BPWM1_CH5 / BPWM0_CH2 / TM1_EXT / CLKO
30	PB.13 / ADC0_CH13 / SPI0_MISO / USCI0_DAT0 / UART0_TXD / BPWM0_CH1 / TM2_EXT
31	PB.12 / ADC0_CH12 / SPI0_MOSI / USCI0_CLK / UART0_RXD / BPWM0_CH0 / TM3_EXT
32	AV_{DD}

Table 4.1-26 M032TD2AE Multi-function Pin Table

4.1.4.4 M032 Series LQFP 48-Pin Multi-function Pin Diagram

Corresponding Part Number: M032LC2AE, M032LD2AE, M032LE3AE, M032LG6AE, M032LG8AE

M032LC2AE

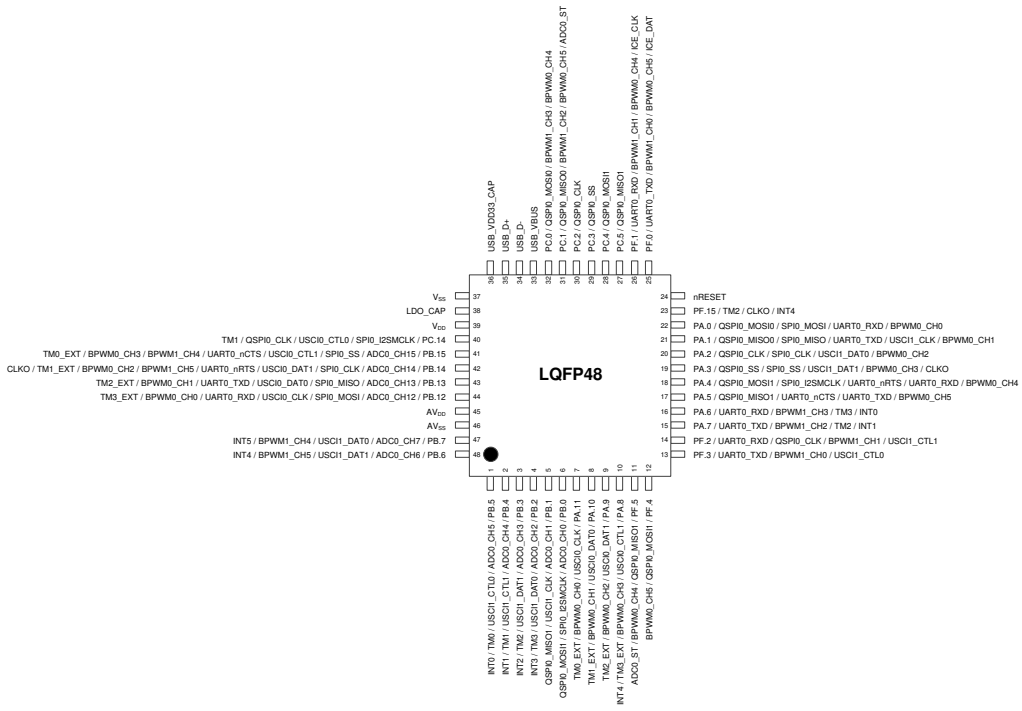

Figure 4.1-39 M032LC2AE Multi-function Pin Diagram

Pin	M032LC2AE Pin Function
1	PB.5 / ADC0_CH5 / USCI1_CTL0 / TM0 / INT0
2	PB.4 / ADC0_CH4 / USCI1_CTL1 / TM1 / INT1
3	PB.3 / ADC0_CH3 / USCI1_DAT1 / TM2 / INT2

Pin	M032LC2AE Pin Function
4	PB.2 / ADC0_CH2 / USCI1_DAT0 / TM3 / INT3
5	PB.1 / ADC0_CH1 / USCI1_CLK / QSPI0_MISO1
6	PB.0 / ADC0_CH0 / SPI0_I2SMCLK / QSPI0_MOSI1
7	PA.11 / USCI0_CLK / BPWM0_CH0 / TM0_EXT
8	PA.10 / USCI0_DAT0 / BPWM0_CH1 / TM1_EXT
9	PA.9 / USCI0_DAT1 / BPWM0_CH2 / TM2_EXT
10	PA.8 / USCI0_CTL1 / BPWM0_CH3 / TM3_EXT / INT4
11	PF.5 / QSPI0_MISO1 / BPWM0_CH4 / ADC0_ST
12	PF.4 / QSPI0_MOSI1 / BPWM0_CH5
13	PF.3 / UART0_TXD / BPWM1_CH0 / USCI1_CTL0
14	PF.2 / UART0_RXD / QSPI0_CLK / BPWM1_CH1 / USCI1_CTL1
15	PA.7 / UART0_TXD / BPWM1_CH2 / TM2 / INT1
16	PA.6 / UART0_RXD / BPWM1_CH3 / TM3 / INT0
17	PA.5 / QSPI0_MISO1 / UART0_nCTS / UART0_TXD / BPWM0_CH5
18	PA.4 / QSPI0_MOSI1 / SPI0_I2SMCLK / UART0_nRTS / UART0_RXD / BPWM0_CH4
19	PA.3 / QSPI0_SS / SPI0_SS / USCI1_DAT1 / BPWM0_CH3 / CLKO
20	PA.2 / QSPI0_CLK / SPI0_CLK / USCI1_DAT0 / BPWM0_CH2
21	PA.1 / QSPI0_MISO0 / SPI0_MISO / UART0_TXD / USCI1_CLK / BPWM0_CH1
22	PA.0 / QSPI0_MOSI0 / SPI0_MOSI / UART0_RXD / BPWM0_CH0
23	PF.15 / TM2 / CLKO / INT4
24	nRESET
25	PF.0 / UART0_TXD / BPWM1_CH0 / BPWM0_CH5 / ICE_DAT
26	PF.1 / UART0_RXD / BPWM1_CH1 / BPWM0_CH4 / ICE_CLK
27	PC.5 / QSPI0_MISO1
28	PC.4 / QSPI0_MOSI1
29	PC.3 / QSPI0_SS
30	PC.2 / QSPI0_CLK
31	PC.1 / QSPI0_MISO0 / BPWM1_CH2 / BPWM0_CH5 / ADC0_ST
32	PC.0 / QSPI0_MOSI0 / BPWM1_CH3 / BPWM0_CH4
33	USB_VBUS
34	USB_D-
35	USB_D+
36	USB_V_{DD}33_CAP
37	VSS

Pin	M032LC2AE Pin Function
38	LDO_CAP
39	V_{DD}
40	PC.14 / SPI0_I2SMCLK / USCI0_CTL0 / QSPI0_CLK / TM1
41	PB.15 / ADC0_CH15 / SPI0_SS / USCI0_CTL1 / UART0_nCTS / BPWM1_CH4 / BPWM0_CH3 / TM0_EXT
42	PB.14 / ADC0_CH14 / SPI0_CLK / USCI0_DAT1 / UART0_nRTS / BPWM1_CH5 / BPWM0_CH2 / TM1_EXT / CLKO
43	PB.13 / ADC0_CH13 / SPI0_MISO / USCI0_DAT0 / UART0_TXD / BPWM0_CH1 / TM2_EXT
44	PB.12 / ADC0_CH12 / SPI0_MOSI / USCI0_CLK / UART0_RXD / BPWM0_CH0 / TM3_EXT
45	AV_{DD}
46	AVSS
47	PB.7 / ADC0_CH7 / USCI1_DAT0 / BPWM1_CH4 / INT5
48	PB.6 / ADC0_CH6 / USCI1_DAT1 / BPWM1_CH5 / INT4

Table 4.1-27 M032LC2AE Multi-function Pin Table

M032LD2AE

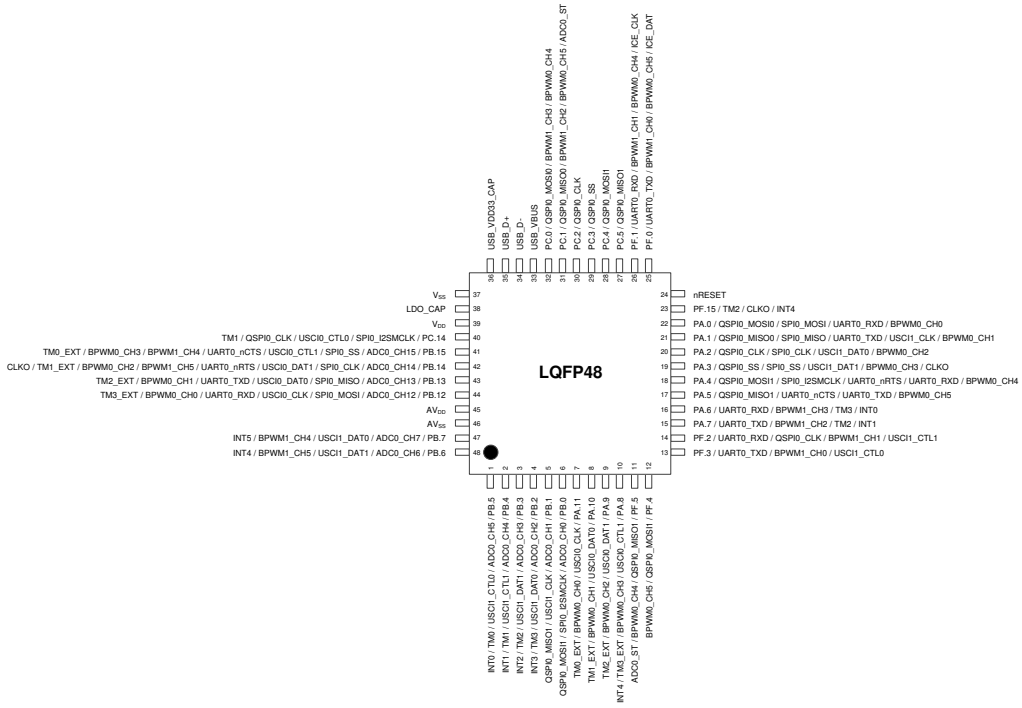

Figure 4.1-40 M032LD2AE Multi-function Pin Diagram

Pin	M032LD2AE Pin Function
1	PB.5 / ADC0_CH5 / USCI1_CTL0 / TM0 / INT0
2	PB.4 / ADC0_CH4 / USCI1_CTL1 / TM1 / INT1
3	PB.3 / ADC0_CH3 / USCI1_DAT1 / TM2 / INT2
4	PB.2 / ADC0_CH2 / USCI1_DAT0 / TM3 / INT3
5	PB.1 / ADC0_CH1 / USCI1_CLK / QSPI0_MISO1
6	PB.0 / ADC0_CH0 / SPI0_I2SMCLK / QSPI0_MOSI1

Pin	M032LD2AE Pin Function
7	PA.11 / USCI0_CLK / BPWM0_CH0 / TM0_EXT
8	PA.10 / USCI0_DAT0 / BPWM0_CH1 / TM1_EXT
9	PA.9 / USCI0_DAT1 / BPWM0_CH2 / TM2_EXT
10	PA.8 / USCI0_CTL1 / BPWM0_CH3 / TM3_EXT / INT4
11	PF.5 / QSPI0_MISO1 / BPWM0_CH4 / ADC0_ST
12	PF.4 / QSPI0_MOSI1 / BPWM0_CH5
13	PF.3 / UART0_TXD / BPWM1_CH0 / USCI1_CTL0
14	PF.2 / UART0_RXD / QSPI0_CLK / BPWM1_CH1 / USCI1_CTL1
15	PA.7 / UART0_TXD / BPWM1_CH2 / TM2 / INT1
16	PA.6 / UART0_RXD / BPWM1_CH3 / TM3 / INT0
17	PA.5 / QSPI0_MISO1 / UART0_nCTS / UART0_TXD / BPWM0_CH5
18	PA.4 / QSPI0_MOSI1 / SPI0_I2SMCLK / UART0_nRTS / UART0_RXD / BPWM0_CH4
19	PA.3 / QSPI0_SS / SPI0_SS / USCI1_DAT1 / BPWM0_CH3 / CLKO
20	PA.2 / QSPI0_CLK / SPI0_CLK / USCI1_DAT0 / BPWM0_CH2
21	PA.1 / QSPI0_MISO0 / SPI0_MISO / UART0_TXD / USCI1_CLK / BPWM0_CH1
22	PA.0 / QSPI0_MOSI0 / SPI0_MOSI / UART0_RXD / BPWM0_CH0
23	PF.15 / TM2 / CLKO / INT4
24	nRESET
25	PF.0 / UART0_TXD / BPWM1_CH0 / BPWM0_CH5 / ICE_DAT
26	PF.1 / UART0_RXD / BPWM1_CH1 / BPWM0_CH4 / ICE_CLK
27	PC.5 / QSPI0_MISO1
28	PC.4 / QSPI0_MOSI1
29	PC.3 / QSPI0_SS
30	PC.2 / QSPI0_CLK
31	PC.1 / QSPI0_MISO0 / BPWM1_CH2 / BPWM0_CH5 / ADC0_ST
32	PC.0 / QSPI0_MOSI0 / BPWM1_CH3 / BPWM0_CH4
33	USB_VBUS
34	USB_D-
35	USB_D+
36	USB_V_{DD}33_CAP
37	VSS
38	LDO_CAP
39	V_{DD}
40	PC.14 / SPI0_I2SMCLK / USCI0_CTL0 / QSPI0_CLK / TM1

Pin	M032LD2AE Pin Function
41	PB.15 / ADC0_CH15 / SPI0_SS / USCI0_CTL1 / UART0_nCTS / BPWM1_CH4 / BPWM0_CH3 / TM0_EXT
42	PB.14 / ADC0_CH14 / SPI0_CLK / USCI0_DAT1 / UART0_nRTS / BPWM1_CH5 / BPWM0_CH2 / TM1_EXT / CLKO
43	PB.13 / ADC0_CH13 / SPI0_MISO / USCI0_DAT0 / UART0_TXD / BPWM0_CH1 / TM2_EXT
44	PB.12 / ADC0_CH12 / SPI0_MOSI / USCI0_CLK / UART0_RXD / BPWM0_CH0 / TM3_EXT
45	AV_{DD}
46	AVSS
47	PB.7 / ADC0_CH7 / USCI1_DAT0 / BPWM1_CH4 / INT5
48	PB.6 / ADC0_CH6 / USCI1_DAT1 / BPWM1_CH5 / INT4

Table 4.1-28 M032LD2AE Multi-function Pin Table

M032LE3AE

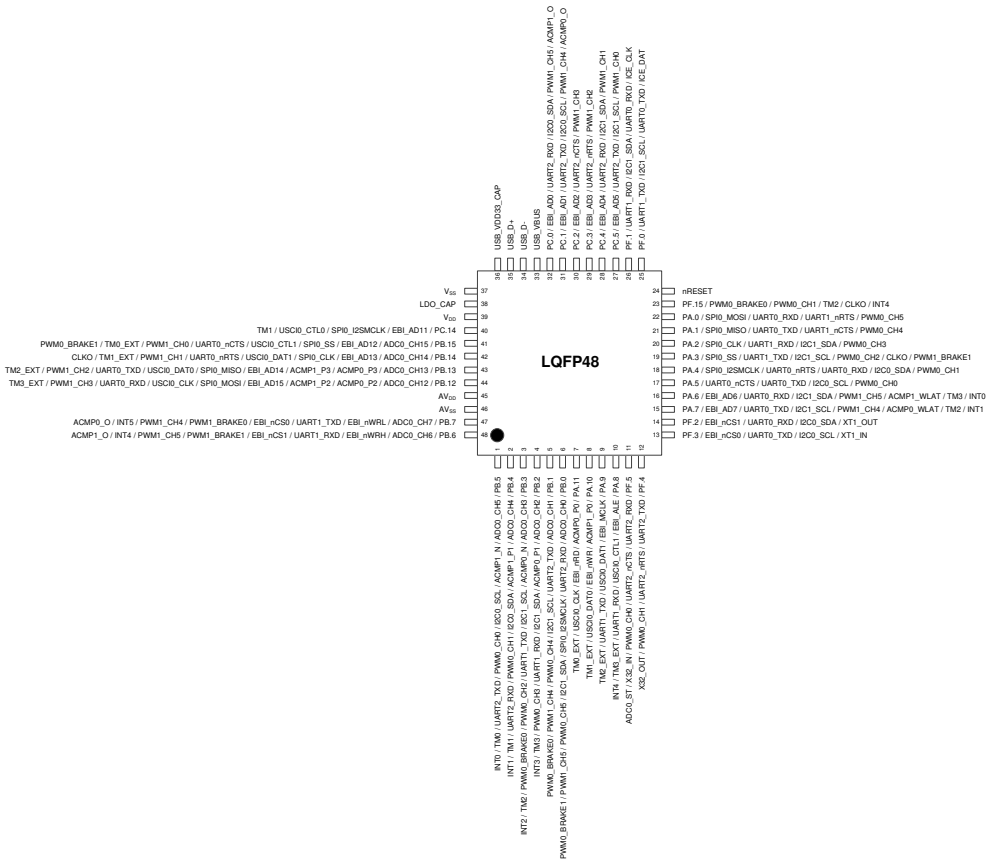

Figure 4.1-41 M032LE3AE Multi-function Pin Diagram

Pin	M032LE3AE Pin Function
1	PB.5 / ADC0_CH5 / ACMP1_N / I2C0_SCL / PWM0_CH0 / UART2_TXD / TM0 / INT0
2	PB.4 / ADC0_CH4 / ACMP1_P1 / I2C0_SDA / PWM0_CH1 / UART2_RXD / TM1 / INT1
3	PB.3 / ADC0_CH3 / ACMP0_N / I2C1_SCL / UART1_TXD / PWM0_CH2 / PWM0_BRAKE0 / TM2 / INT2
4	PB.2 / ADC0_CH2 / ACMP0_P1 / I2C1_SDA / UART1_RXD / PWM0_CH3 / TM3 / INT3
5	PB.1 / ADC0_CH1 / UART2_TXD / I2C1_SCL / PWM0_CH4 / PWM1_CH4 / PWM0_BRAKE0

Pin	M032LE3AE Pin Function
6	PB.0 / ADC0_CH0 / UART2_RXD / SPI0_I2SMCLK / I2C1_SDA / PWM0_CH5 / PWM1_CH5 / PWM0_BRAKE1
7	PA.11 / ACMP0_P0 / EBI_nRD / USCI0_CLK / TM0_EXT
8	PA.10 / ACMP1_P0 / EBI_nWR / USCI0_DAT0 / TM1_EXT
9	PA.9 / EBI_MCLK / USCI0_DAT1 / UART1_TXD / TM2_EXT
10	PA.8 / EBI_ALE / USCI0_CTL1 / UART1_RXD / TM3_EXT / INT4
11	PF.5 / UART2_RXD / UART2_nCTS / PWM0_CH0 / X32_IN / ADC0_ST
12	PF.4 / UART2_TXD / UART2_nRTS / PWM0_CH1 / X32_OUT
13	PF.3 / EBI_nCS0 / UART0_TXD / I2C0_SCL / XT1_IN
14	PF.2 / EBI_nCS1 / UART0_RXD / I2C0_SDA / XT1_OUT
15	PA.7 / EBI_AD7 / UART0_TXD / I2C1_SCL / PWM1_CH4 / ACMP0_WLAT / TM2 / INT1
16	PA.6 / EBI_AD6 / UART0_RXD / I2C1_SDA / PWM1_CH5 / ACMP1_WLAT / TM3 / INT0
17	PA.5 / UART0_nCTS / UART0_TXD / I2C0_SCL / PWM0_CH0
18	PA.4 / SPI0_I2SMCLK / UART0_nRTS / UART0_RXD / I2C0_SDA / PWM0_CH1
19	PA.3 / SPI0_SS / UART1_TXD / I2C1_SCL / PWM0_CH2 / CLKO / PWM1_BRAKE1
20	PA.2 / SPI0_CLK / UART1_RXD / I2C1_SDA / PWM0_CH3
21	PA.1 / SPI0_MISO / UART0_TXD / UART1_nCTS / PWM0_CH4
22	PA.0 / SPI0_MOSI / UART0_RXD / UART1_nRTS / PWM0_CH5
23	PF.15 / PWM0_BRAKE0 / PWM0_CH1 / TM2 / CLKO / INT4
24	nRESET
25	PF.0 / UART1_TXD / I2C1_SCL / UART0_TXD / ICE_DAT
26	PF.1 / UART1_RXD / I2C1_SDA / UART0_RXD / ICE_CLK
27	PC.5 / EBI_AD5 / UART2_TXD / I2C1_SCL / PWM1_CH0
28	PC.4 / EBI_AD4 / UART2_RXD / I2C1_SDA / PWM1_CH1
29	PC.3 / EBI_AD3 / UART2_nRTS / PWM1_CH2
30	PC.2 / EBI_AD2 / UART2_nCTS / PWM1_CH3
31	PC.1 / EBI_AD1 / UART2_TXD / I2C0_SCL / PWM1_CH4 / ACMP0_O
32	PC.0 / EBI_AD0 / UART2_RXD / I2C0_SDA / PWM1_CH5 / ACMP1_O
33	USB_VBUS
34	USB_D-
35	USB_D+
36	USB_V_{DD}33_CAP
37	VSS
38	LDO_CAP
39	V_{DD}

Pin	M032LE3AE Pin Function
40	PC.14 / EBI_AD11 / SPI0_I2SMCLK / USCI0_CTL0 / TM1
41	PB.15 / ADC0_CH15 / EBI_AD12 / SPI0_SS / USCI0_CTL1 / UART0_nCTS / PWM1_CH0 / TM0_EXT / PWM0_BRAKE1
42	PB.14 / ADC0_CH14 / EBI_AD13 / SPI0_CLK / USCI0_DAT1 / UART0_nRTS / PWM1_CH1 / TM1_EXT / CLKO
43	PB.13 / ADC0_CH13 / ACMP0_P3 / ACMP1_P3 / EBI_AD14 / SPI0_MISO / USCI0_DAT0 / UART0_TXD / PWM1_CH2 / TM2_EXT
44	PB.12 / ADC0_CH12 / ACMP0_P2 / ACMP1_P2 / EBI_AD15 / SPI0_MOSI / USCI0_CLK / UART0_RXD / PWM1_CH3 / TM3_EXT
45	AV_{DD}
46	AVSS
47	PB.7 / ADC0_CH7 / EBI_nWRL / UART1_TXD / EBI_nCS0 / PWM1_BRAKE0 / PWM1_CH4 / INT5 / ACMP0_O
48	PB.6 / ADC0_CH6 / EBI_nWRH / UART1_RXD / EBI_nCS1 / PWM1_BRAKE1 / PWM1_CH5 / INT4 / ACMP1_O

Table 4.1-29 M032LE3AE Multi-function Pin Table

M032LG6AE

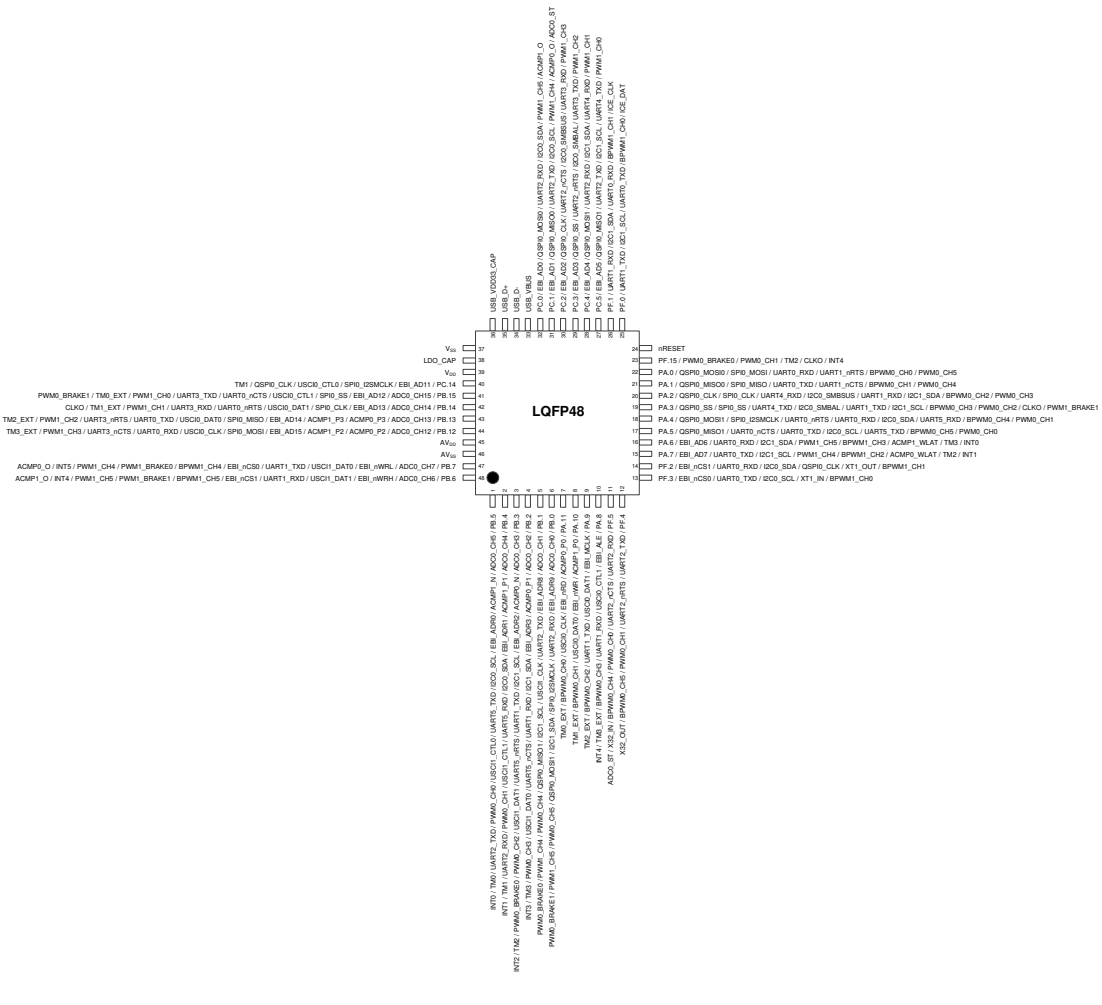

Figure 4.1-42 M032LG6AE Multi-function Pin Diagram

Pin	M032LG6AE Pin Function
1	PB.5 / ADC0_CH5 / ACMP1_N / EBI_ADR0 / I2C0_SCL / UART5_TXD / USCI1_CTL0 / PWM0_CH0 / UART2_TXD / TM0 / INT0
2	PB.4 / ADC0_CH4 / ACMP1_P1 / EBI_ADR1 / I2C0_SDA / UART5_RXD / USCI1_CTL1 / PWM0_CH1 / UART2_RXD / TM1 / INT1
3	PB.3 / ADC0_CH3 / ACMP0_N / EBI_ADR2 / I2C1_SCL / UART1_TXD / UART5_nRTS / USCI1_DAT1 / PWM0_CH2 / PWM0_BRAKE0 / TM2 / INT2
4	PB.2 / ADC0_CH2 / ACMP0_P1 / EBI_ADR3 / I2C1_SDA / UART1_RXD / UART5_nCTS / USCI1_DAT0 / PWM0_CH3 / TM3 / INT3

Pin	M032LG6AE Pin Function
5	PB.1 / ADC0_CH1 / EBI_ADR8 / UART2_TXD / USCI1_CLK / I2C1_SCL / QSPI0_MISO1 / PWM0_CH4 / PWM1_CH4 / PWM0_BRAKE0
6	PB.0 / ADC0_CH0 / EBI_ADR9 / UART2_RXD / SPI0_I2SMCLK / I2C1_SDA / QSPI0_MOSI1 / PWM0_CH5 / PWM1_CH5 / PWM0_BRAKE1
7	PA.11 / ACMP0_P0 / EBI_nRD / USCI0_CLK / BPWM0_CH0 / TM0_EXT
8	PA.10 / ACMP1_P0 / EBI_nWR / USCI0_DAT0 / BPWM0_CH1 / TM1_EXT
9	PA.9 / EBI_MCLK / USCI0_DAT1 / UART1_TXD / BPWM0_CH2 / TM2_EXT
10	PA.8 / EBI_ALE / USCI0_CTL1 / UART1_RXD / BPWM0_CH3 / TM3_EXT / INT4
11	PF.5 / UART2_RXD / UART2_nCTS / PWM0_CH0 / BPWM0_CH4 / X32_IN / ADC0_ST
12	PF.4 / UART2_TXD / UART2_nRTS / PWM0_CH1 / BPWM0_CH5 / X32_OUT
13	PF.3 / EBI_nCS0 / UART0_TXD / I2C0_SCL / XT1_IN / BPWM1_CH0
14	PF.2 / EBI_nCS1 / UART0_RXD / I2C0_SDA / QSPI0_CLK / XT1_OUT / BPWM1_CH1
15	PA.7 / EBI_AD7 / UART0_TXD / I2C1_SCL / PWM1_CH4 / BPWM1_CH2 / ACMP0_WLAT / TM2 / INT1
16	PA.6 / EBI_AD6 / UART0_RXD / I2C1_SDA / PWM1_CH5 / BPWM1_CH3 / ACMP1_WLAT / TM3 / INT0
17	PA.5 / QSPI0_MISO1 / UART0_nCTS / UART0_TXD / I2C0_SCL / UART5_TXD / BPWM0_CH5 / PWM0_CH0
18	PA.4 / QSPI0_MOSI1 / SPI0_I2SMCLK / UART0_nRTS / UART0_RXD / I2C0_SDA / UART5_RXD / BPWM0_CH4 / PWM0_CH1
19	PA.3 / QSPI0_SS / SPI0_SS / UART4_TXD / I2C0_SMBAL / UART1_TXD / I2C1_SCL / BPWM0_CH3 / PWM0_CH2 / CLKO / PWM1_BRAKE1
20	PA.2 / QSPI0_CLK / SPI0_CLK / UART4_RXD / I2C0_SMBSUS / UART1_RXD / I2C1_SDA / BPWM0_CH2 / PWM0_CH3
21	PA.1 / QSPI0_MISO0 / SPI0_MISO / UART0_TXD / UART1_nCTS / BPWM0_CH1 / PWM0_CH4
22	PA.0 / QSPI0_MOSI0 / SPI0_MOSI / UART0_RXD / UART1_nRTS / BPWM0_CH0 / PWM0_CH5
23	PF.15 / PWM0_BRAKE0 / PWM0_CH1 / TM2 / CLKO / INT4
24	nRESET
25	PF.0 / UART1_TXD / I2C1_SCL / UART0_TXD / BPWM1_CH0 / ICE_DAT
26	PF.1 / UART1_RXD / I2C1_SDA / UART0_RXD / BPWM1_CH1 / ICE_CLK
27	PC.5 / EBI_AD5 / QSPI0_MISO1 / UART2_TXD / I2C1_SCL / UART4_TXD / PWM1_CH0
28	PC.4 / EBI_AD4 / QSPI0_MOSI1 / UART2_RXD / I2C1_SDA / UART4_RXD / PWM1_CH1
29	PC.3 / EBI_AD3 / QSPI0_SS / UART2_nRTS / I2C0_SMBAL / UART3_TXD / PWM1_CH2
30	PC.2 / EBI_AD2 / QSPI0_CLK / UART2_nCTS / I2C0_SMBSUS / UART3_RXD / PWM1_CH3
31	PC.1 / EBI_AD1 / QSPI0_MISO0 / UART2_TXD / I2C0_SCL / PWM1_CH4 / ACMP0_O / ADC0_ST
32	PC.0 / EBI_AD0 / QSPI0_MOSI0 / UART2_RXD / I2C0_SDA / PWM1_CH5 / ACMP1_O
33	USB_VBUS
34	USB_D-
35	USB_D+
36	USB_V_{DD}33_CAP

Pin	M032LG6AE Pin Function
37	VSS
38	LDO_CAP
39	V_{DD}
40	PC.14 / EBI_AD11 / SPI0_I2SMCLK / USCI0_CTL0 / QSPI0_CLK / TM1
41	PB.15 / ADC0_CH15 / EBI_AD12 / SPI0_SS / USCI0_CTL1 / UART0_nCTS / UART3_TXD / PWM1_CH0 / TM0_EXT / PWM0_BRAKE1
42	PB.14 / ADC0_CH14 / EBI_AD13 / SPI0_CLK / USCI0_DAT1 / UART0_nRTS / UART3_RXD / PWM1_CH1 / TM1_EXT / CLKO
43	PB.13 / ADC0_CH13 / ACMP0_P3 / ACMP1_P3 / EBI_AD14 / SPI0_MISO / USCI0_DAT0 / UART0_TXD / UART3_nRTS / PWM1_CH2 / TM2_EXT
44	PB.12 / ADC0_CH12 / ACMP0_P2 / ACMP1_P2 / EBI_AD15 / SPI0_MOSI / USCI0_CLK / UART0_RXD / UART3_nCTS / PWM1_CH3 / TM3_EXT
45	AV_{DD}
46	AVSS
47	PB.7 / ADC0_CH7 / EBI_nWRL / USCI1_DAT0 / UART1_TXD / EBI_nCS0 / BPWM1_CH4 / PWM1_BRAKE0 / PWM1_CH4 / INT5 / ACMP0_O
48	PB.6 / ADC0_CH6 / EBI_nWRH / USCI1_DAT1 / UART1_RXD / EBI_nCS1 / BPWM1_CH5 / PWM1_BRAKE1 / PWM1_CH5 / INT4 / ACMP1_O

Table 4.1-30 M032LG6AE Multi-function Pin Table

M032LG8AE

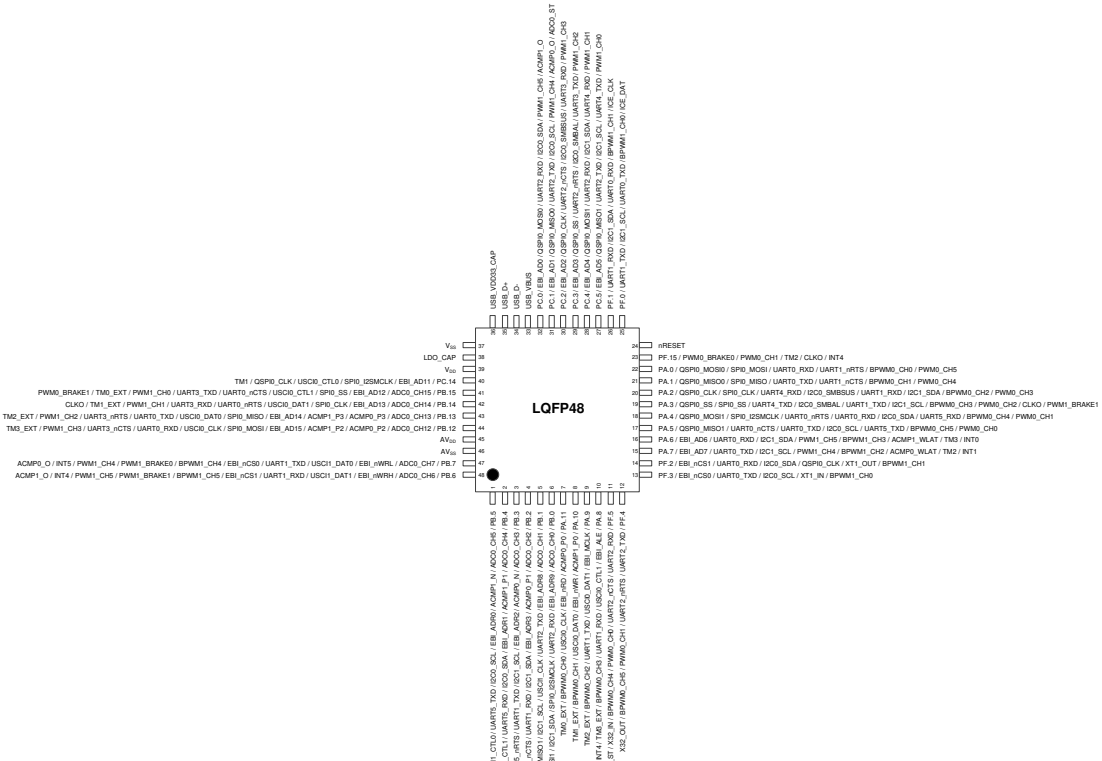

Figure 4.1-43 M032LG8AE Multi-function Pin Diagram

Pin	M032LG8AE Pin Function
1	PB.5 / ADC0_CH5 / ACMP1_N / EBI_ADR0 / I2C0_SCL / UART5_TXD / USCI1_CTL0 / PWM0_CH0 / UART2_TXD / TM0 / INT0
2	PB.4 / ADC0_CH4 / ACMP1_P1 / EBI_ADR1 / I2C0_SDA / UART5_RXD / USCI1_CTL1 / PWM0_CH1 / UART2_RXD / TM1 / INT1
3	PB.3 / ADC0_CH3 / ACMP0_N / EBI_ADR2 / I2C1_SCL / UART1_TXD / UART5_nRTS / USCI1_DAT1 / PWM0_CH2 / PWM0_BRAKE0 / TM2 / INT2
4	PB.2 / ADC0_CH2 / ACMP0_P1 / EBI_ADR3 / I2C1_SDA / UART1_RXD / UART5_nCTS / USCI1_DAT0 / PWM0_CH3 / TM3 / INT3

Pin	M032LG8AE Pin Function
5	PB.1 / ADC0_CH1 / EBI_ADR8 / UART2_TXD / USCI1_CLK / I2C1_SCL / QSPI0_MISO1 / PWM0_CH4 / PWM1_CH4 / PWM0_BRAKE0
6	PB.0 / ADC0_CH0 / EBI_ADR9 / UART2_RXD / SPI0_I2SMCLK / I2C1_SDA / QSPI0_MOSI1 / PWM0_CH5 / PWM1_CH5 / PWM0_BRAKE1
7	PA.11 / ACMP0_P0 / EBI_nRD / USCI0_CLK / BPWM0_CH0 / TM0_EXT
8	PA.10 / ACMP1_P0 / EBI_nWR / USCI0_DAT0 / BPWM0_CH1 / TM1_EXT
9	PA.9 / EBI_MCLK / USCI0_DAT1 / UART1_TXD / BPWM0_CH2 / TM2_EXT
10	PA.8 / EBI_ALE / USCI0_CTL1 / UART1_RXD / BPWM0_CH3 / TM3_EXT / INT4
11	PF.5 / UART2_RXD / UART2_nCTS / PWM0_CH0 / BPWM0_CH4 / X32_IN / ADC0_ST
12	PF.4 / UART2_TXD / UART2_nRTS / PWM0_CH1 / BPWM0_CH5 / X32_OUT
13	PF.3 / EBI_nCS0 / UART0_TXD / I2C0_SCL / XT1_IN / BPWM1_CH0
14	PF.2 / EBI_nCS1 / UART0_RXD / I2C0_SDA / QSPI0_CLK / XT1_OUT / BPWM1_CH1
15	PA.7 / EBI_AD7 / UART0_TXD / I2C1_SCL / PWM1_CH4 / BPWM1_CH2 / ACMP0_WLAT / TM2 / INT1
16	PA.6 / EBI_AD6 / UART0_RXD / I2C1_SDA / PWM1_CH5 / BPWM1_CH3 / ACMP1_WLAT / TM3 / INT0
17	PA.5 / QSPI0_MISO1 / UART0_nCTS / UART0_TXD / I2C0_SCL / UART5_TXD / BPWM0_CH5 / PWM0_CH0
18	PA.4 / QSPI0_MOSI1 / SPI0_I2SMCLK / UART0_nRTS / UART0_RXD / I2C0_SDA / UART5_RXD / BPWM0_CH4 / PWM0_CH1
19	PA.3 / QSPI0_SS / SPI0_SS / UART4_TXD / I2C0_SMBAL / UART1_TXD / I2C1_SCL / BPWM0_CH3 / PWM0_CH2 / CLKO / PWM1_BRAKE1
20	PA.2 / QSPI0_CLK / SPI0_CLK / UART4_RXD / I2C0_SMBSUS / UART1_RXD / I2C1_SDA / BPWM0_CH2 / PWM0_CH3
21	PA.1 / QSPI0_MISO0 / SPI0_MISO / UART0_TXD / UART1_nCTS / BPWM0_CH1 / PWM0_CH4
22	PA.0 / QSPI0_MOSI0 / SPI0_MOSI / UART0_RXD / UART1_nRTS / BPWM0_CH0 / PWM0_CH5
23	PF.15 / PWM0_BRAKE0 / PWM0_CH1 / TM2 / CLKO / INT4
24	nRESET
25	PF.0 / UART1_TXD / I2C1_SCL / UART0_TXD / BPWM1_CH0 / ICE_DAT
26	PF.1 / UART1_RXD / I2C1_SDA / UART0_RXD / BPWM1_CH1 / ICE_CLK
27	PC.5 / EBI_AD5 / QSPI0_MISO1 / UART2_TXD / I2C1_SCL / UART4_TXD / PWM1_CH0
28	PC.4 / EBI_AD4 / QSPI0_MOSI1 / UART2_RXD / I2C1_SDA / UART4_RXD / PWM1_CH1
29	PC.3 / EBI_AD3 / QSPI0_SS / UART2_nRTS / I2C0_SMBAL / UART3_TXD / PWM1_CH2
30	PC.2 / EBI_AD2 / QSPI0_CLK / UART2_nCTS / I2C0_SMBSUS / UART3_RXD / PWM1_CH3
31	PC.1 / EBI_AD1 / QSPI0_MISO0 / UART2_TXD / I2C0_SCL / PWM1_CH4 / ACMP0_O / ADC0_ST
32	PC.0 / EBI_AD0 / QSPI0_MOSI0 / UART2_RXD / I2C0_SDA / PWM1_CH5 / ACMP1_O
33	USB_VBUS
34	USB_D-
35	USB_D+
36	USB_V_{DD}33_CAP

Pin	M032LG8AE Pin Function
37	VSS
38	LDO_CAP
39	V_{DD}
40	PC.14 / EBI_AD11 / SPI0_I2SMCLK / USCI0_CTL0 / QSPI0_CLK / TM1
41	PB.15 / ADC0_CH15 / EBI_AD12 / SPI0_SS / USCI0_CTL1 / UART0_nCTS / UART3_TXD / PWM1_CH0 / TM0_EXT / PWM0_BRAKE1
42	PB.14 / ADC0_CH14 / EBI_AD13 / SPI0_CLK / USCI0_DAT1 / UART0_nRTS / UART3_RXD / PWM1_CH1 / TM1_EXT / CLKO
43	PB.13 / ADC0_CH13 / ACMP0_P3 / ACMP1_P3 / EBI_AD14 / SPI0_MISO / USCI0_DAT0 / UART0_TXD / UART3_nRTS / PWM1_CH2 / TM2_EXT
44	PB.12 / ADC0_CH12 / ACMP0_P2 / ACMP1_P2 / EBI_AD15 / SPI0_MOSI / USCI0_CLK / UART0_RXD / UART3_nCTS / PWM1_CH3 / TM3_EXT
45	AV_{DD}
46	AVSS
47	PB.7 / ADC0_CH7 / EBI_nWRL / USCI1_DAT0 / UART1_TXD / EBI_nCS0 / BPWM1_CH4 / PWM1_BRAKE0 / PWM1_CH4 / INT5 / ACMP0_O
48	PB.6 / ADC0_CH6 / EBI_nWRH / USCI1_DAT1 / UART1_RXD / EBI_nCS1 / BPWM1_CH5 / PWM1_BRAKE1 / PWM1_CH5 / INT4 / ACMP1_O

Table 4.1-31 M032LG8AE Multi-function Pin Table

4.1.4.5 M032 Series LQFP 64-Pin Multi-function Pin Diagram

Corresponding Part Number: M032SE3AE, M032SG6AE, M032SG8AE, M032SIAAE

M032SE3AE

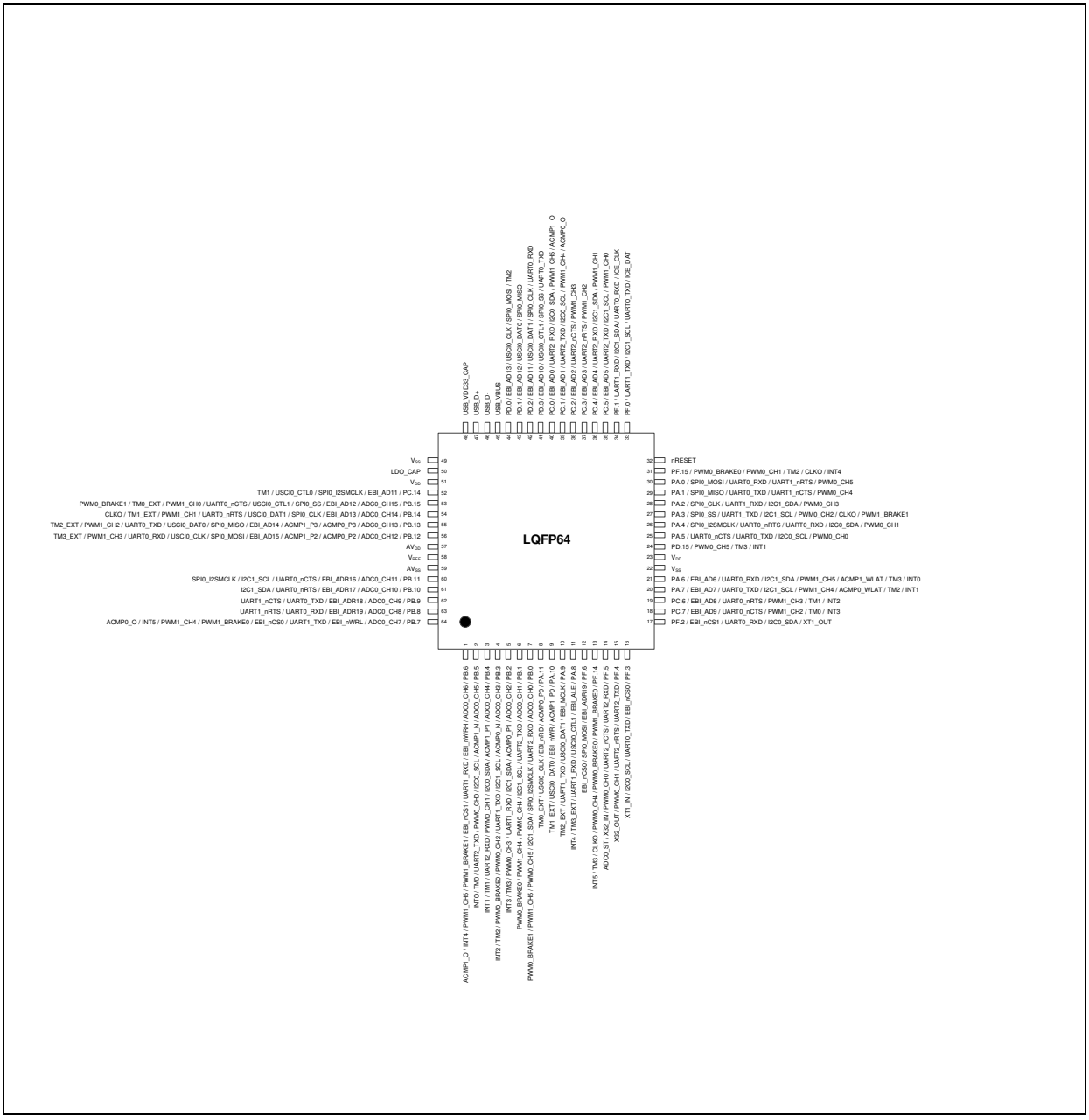

Figure 4.1-44 M032SE3AE Multi-function Pin Diagram

Pin	M032SE3AE Pin Function
1	PB.6 / ADC0_CH6 / EBI_nWRH / UART1_RXD / EBI_nCS1 / PWM1_BRAKE1 / PWM1_CH5 / INT4 / ACMP1_O
2	PB.5 / ADC0_CH5 / ACMP1_N / I2C0_SCL / PWM0_CH0 / UART2_TXD / TM0 / INT0

Pin	M032SE3AE Pin Function
3	PB.4 / ADC0_CH4 / ACMP1_P1 / I2C0_SDA / PWM0_CH1 / UART2_RXD / TM1 / INT1
4	PB.3 / ADC0_CH3 / ACMP0_N / I2C1_SCL / UART1_TXD / PWM0_CH2 / PWM0_BRAKE0 / TM2 / INT2
5	PB.2 / ADC0_CH2 / ACMP0_P1 / I2C1_SDA / UART1_RXD / PWM0_CH3 / TM3 / INT3
6	PB.1 / ADC0_CH1 / UART2_TXD / I2C1_SCL / PWM0_CH4 / PWM1_CH4 / PWM0_BRAKE0
7	PB.0 / ADC0_CH0 / UART2_RXD / SPI0_I2SMCLK / I2C1_SDA / PWM0_CH5 / PWM1_CH5 / PWM0_BRAKE1
8	PA.11 / ACMP0_P0 / EBI_nRD / USCI0_CLK / TM0_EXT
9	PA.10 / ACMP1_P0 / EBI_nWR / USCI0_DAT0 / TM1_EXT
10	PA.9 / EBI_MCLK / USCI0_DAT1 / UART1_TXD / TM2_EXT
11	PA.8 / EBI_ALE / USCI0_CTL1 / UART1_RXD / TM3_EXT / INT4
12	PF.6 / EBI_ADR19 / SPI0_MOSI / EBI_nCS0
13	PF.14 / PWM1_BRAKE0 / PWM0_BRAKE0 / PWM0_CH4 / CLKO / TM3 / INT5
14	PF.5 / UART2_RXD / UART2_nCTS / PWM0_CH0 / X32_IN / ADC0_ST
15	PF.4 / UART2_TXD / UART2_nRTS / PWM0_CH1 / X32_OUT
16	PF.3 / EBI_nCS0 / UART0_TXD / I2C0_SCL / XT1_IN
17	PF.2 / EBI_nCS1 / UART0_RXD / I2C0_SDA / XT1_OUT
18	PC.7 / EBI_AD9 / UART0_nCTS / PWM1_CH2 / TM0 / INT3
19	PC.6 / EBI_AD8 / UART0_nRTS / PWM1_CH3 / TM1 / INT2
20	PA.7 / EBI_AD7 / UART0_TXD / I2C1_SCL / PWM1_CH4 / ACMP0_WLAT / TM2 / INT1
21	PA.6 / EBI_AD6 / UART0_RXD / I2C1_SDA / PWM1_CH5 / ACMP1_WLAT / TM3 / INT0
22	VSS
23	V_{DD}
24	PD.15 / PWM0_CH5 / TM3 / INT1
25	PA.5 / UART0_nCTS / UART0_TXD / I2C0_SCL / PWM0_CH0
26	PA.4 / SPI0_I2SMCLK / UART0_nRTS / UART0_RXD / I2C0_SDA / PWM0_CH1
27	PA.3 / SPI0_SS / UART1_TXD / I2C1_SCL / PWM0_CH2 / CLKO / PWM1_BRAKE1
28	PA.2 / SPI0_CLK / UART1_RXD / I2C1_SDA / PWM0_CH3
29	PA.1 / SPI0_MISO / UART0_TXD / UART1_nCTS / PWM0_CH4
30	PA.0 / SPI0_MOSI / UART0_RXD / UART1_nRTS / PWM0_CH5
31	PF.15 / PWM0_BRAKE0 / PWM0_CH1 / TM2 / CLKO / INT4
32	nRESET
33	PF.0 / UART1_TXD / I2C1_SCL / UART0_TXD / ICE_DAT
34	PF.1 / UART1_RXD / I2C1_SDA / UART0_RXD / ICE_CLK
35	PC.5 / EBI_AD5 / UART2_TXD / I2C1_SCL / PWM1_CH0
36	PC.4 / EBI_AD4 / UART2_RXD / I2C1_SDA / PWM1_CH1

Pin	M032SE3AE Pin Function
37	PC.3 / EBI_AD3 / UART2_nRTS / PWM1_CH2
38	PC.2 / EBI_AD2 / UART2_nCTS / PWM1_CH3
39	PC.1 / EBI_AD1 / UART2_TXD / I2C0_SCL / PWM1_CH4 / ACMP0_O
40	PC.0 / EBI_AD0 / UART2_RXD / I2C0_SDA / PWM1_CH5 / ACMP1_O
41	PD.3 / EBI_AD10 / USCI0_CTL1 / SPI0_SS / UART0_TXD
42	PD.2 / EBI_AD11 / USCI0_DAT1 / SPI0_CLK / UART0_RXD
43	PD.1 / EBI_AD12 / USCI0_DAT0 / SPI0_MISO
44	PD.0 / EBI_AD13 / USCI0_CLK / SPI0_MOSI / TM2
45	USB_VBUS
46	USB_D-
47	USB_D+
48	USB_V_{DD}33_CAP
49	VSS
50	LDO_CAP
51	V_{DD}
52	PC.14 / EBI_AD11 / SPI0_I2SMCLK / USCI0_CTL0 / TM1
53	PB.15 / ADC0_CH15 / EBI_AD12 / SPI0_SS / USCI0_CTL1 / UART0_nCTS / PWM1_CH0 / TM0_EXT / PWM0_BRAKE1
54	PB.14 / ADC0_CH14 / EBI_AD13 / SPI0_CLK / USCI0_DAT1 / UART0_nRTS / PWM1_CH1 / TM1_EXT / CLKO
55	PB.13 / ADC0_CH13 / ACMP0_P3 / ACMP1_P3 / EBI_AD14 / SPI0_MISO / USCI0_DAT0 / UART0_TXD / PWM1_CH2 / TM2_EXT
56	PB.12 / ADC0_CH12 / ACMP0_P2 / ACMP1_P2 / EBI_AD15 / SPI0_MOSI / USCI0_CLK / UART0_RXD / PWM1_CH3 / TM3_EXT
57	AV_{DD}
58	V_{REF}
59	AVSS
60	PB.11 / ADC0_CH11 / EBI_ADR16 / UART0_nCTS / I2C1_SCL / SPI0_I2SMCLK
61	PB.10 / ADC0_CH10 / EBI_ADR17 / UART0_nRTS / I2C1_SDA
62	PB.9 / ADC0_CH9 / EBI_ADR18 / UART0_TXD / UART1_nCTS
63	PB.8 / ADC0_CH8 / EBI_ADR19 / UART0_RXD / UART1_nRTS
64	PB.7 / ADC0_CH7 / EBI_nWRL / UART1_TXD / EBI_nCS0 / PWM1_BRAKE0 / PWM1_CH4 / INT5 / ACMP0_O

Table 4.1-32 M032SE2AE Multi-function Pin Table

M032SG6AE

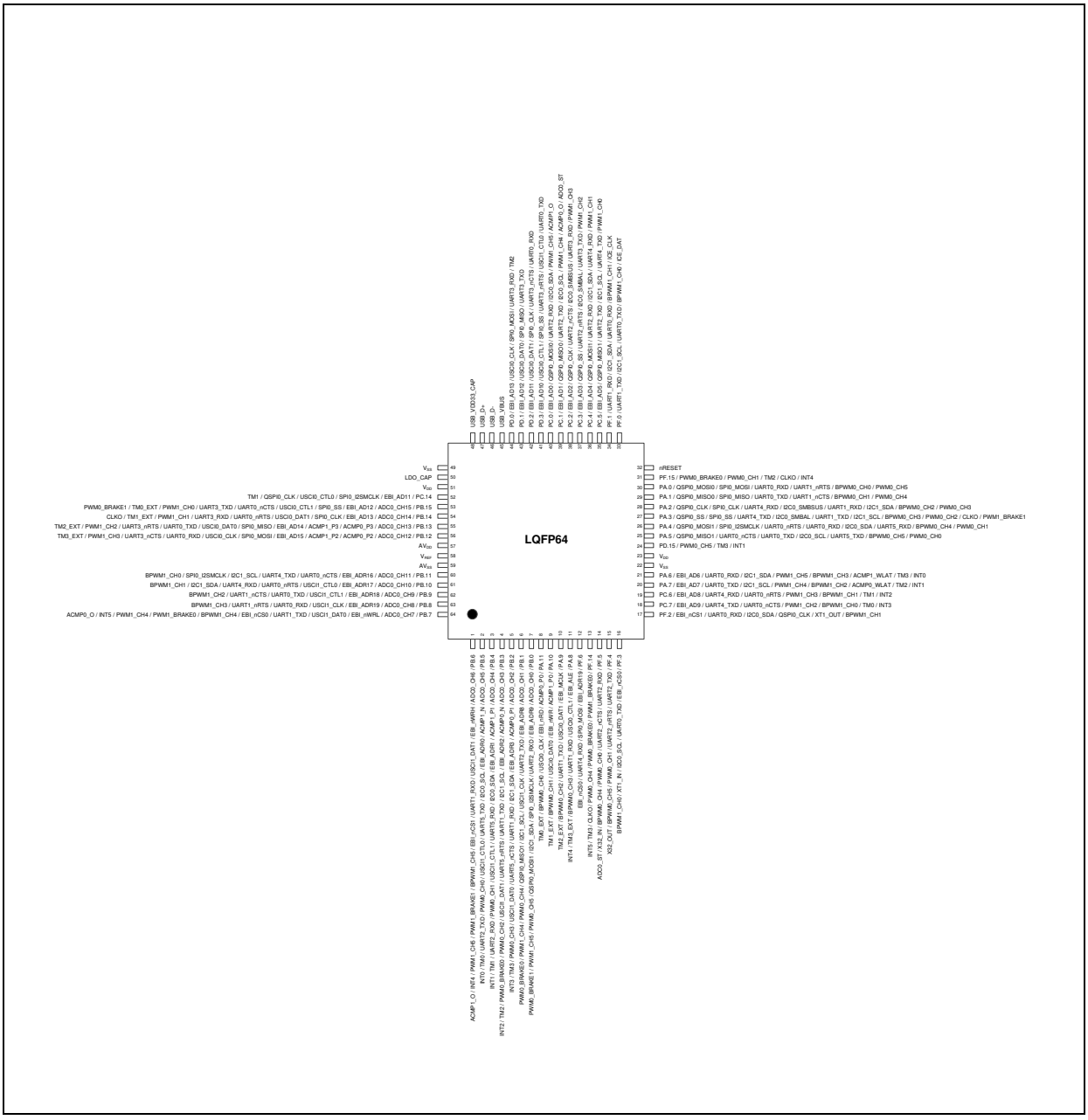

Figure 4.1-45 M032SG6AE Multi-function Pin Diagram

Pin	M032SG6AE Pin Function
1	PB.6 / ADC0_CH6 / EBI_nWRH / USCI1_DAT1 / UART1_RXD / EBI_nCS1 / BPWM1_CH5 / PWM1_BRAKE1 / PWM1_CH5 / INT4 / ACMP1_O
2	PB.5 / ADC0_CH5 / ACMP1_N / EBI_ADR0 / I2C0_SCL / UART5_TXD / USCI1_CTL0 / PWM0_CH0 / UART2_TXD / TM0 / INT0
3	PB.4 / ADC0_CH4 / ACMP1_P1 / EBI_ADR1 / I2C0_SDA / UART5_RXD / USCI1_CTL1 / PWM0_CH1 / UART2_RXD / TM1 / INT1

Pin	M032SG6AE Pin Function
4	PB.3 / ADC0_CH3 / ACMP0_N / EBI_ADR2 / I2C1_SCL / UART1_TXD / UART5_nRTS / USCI1_DAT1 / PWM0_CH2 / PWM0_BRAKE0 / TM2 / INT2
5	PB.2 / ADC0_CH2 / ACMP0_P1 / EBI_ADR3 / I2C1_SDA / UART1_RXD / UART5_nCTS / USCI1_DAT0 / PWM0_CH3 / TM3 / INT3
6	PB.1 / ADC0_CH1 / EBI_ADR8 / UART2_TXD / USCI1_CLK / I2C1_SCL / QSPI0_MISO1 / PWM0_CH4 / PWM1_CH4 / PWM0_BRAKE0
7	PB.0 / ADC0_CH0 / EBI_ADR9 / UART2_RXD / SPI0_I2SMCLK / I2C1_SDA / QSPI0_MOSI1 / PWM0_CH5 / PWM1_CH5 / PWM0_BRAKE1
8	PA.11 / ACMP0_P0 / EBI_nRD / USCI0_CLK / BPWM0_CH0 / TM0_EXT
9	PA.10 / ACMP1_P0 / EBI_nWR / USCI0_DAT0 / BPWM0_CH1 / TM1_EXT
10	PA.9 / EBI_MCLK / USCI0_DAT1 / UART1_TXD / BPWM0_CH2 / TM2_EXT
11	PA.8 / EBI_ALE / USCI0_CTL1 / UART1_RXD / BPWM0_CH3 / TM3_EXT / INT4
12	PF.6 / EBI_ADR19 / SPI0_MOSI / UART4_RXD / EBI_nCS0
13	PF.14 / PWM1_BRAKE0 / PWM0_BRAKE0 / PWM0_CH4 / CLKO / TM3 / INT5
14	PF.5 / UART2_RXD / UART2_nCTS / PWM0_CH0 / BPWM0_CH4 / X32_IN / ADC0_ST
15	PF.4 / UART2_TXD / UART2_nRTS / PWM0_CH1 / BPWM0_CH5 / X32_OUT
16	PF.3 / EBI_nCS0 / UART0_TXD / I2C0_SCL / XT1_IN / BPWM1_CH0
17	PF.2 / EBI_nCS1 / UART0_RXD / I2C0_SDA / QSPI0_CLK / XT1_OUT / BPWM1_CH1
18	PC.7 / EBI_AD9 / UART4_TXD / UART0_nCTS / PWM1_CH2 / BPWM1_CH0 / TM0 / INT3
19	PC.6 / EBI_AD8 / UART4_RXD / UART0_nRTS / PWM1_CH3 / BPWM1_CH1 / TM1 / INT2
20	PA.7 / EBI_AD7 / UART0_TXD / I2C1_SCL / PWM1_CH4 / BPWM1_CH2 / ACMP0_WLAT / TM2 / INT1
21	PA.6 / EBI_AD6 / UART0_RXD / I2C1_SDA / PWM1_CH5 / BPWM1_CH3 / ACMP1_WLAT / TM3 / INT0
22	VSS
23	V_{DD}
24	PD.15 / PWM0_CH5 / TM3 / INT1
25	PA.5 / QSPI0_MISO1 / UART0_nCTS / UART0_TXD / I2C0_SCL / UART5_TXD / BPWM0_CH5 / PWM0_CH0
26	PA.4 / QSPI0_MOSI1 / SPI0_I2SMCLK / UART0_nRTS / UART0_RXD / I2C0_SDA / UART5_RXD / BPWM0_CH4 / PWM0_CH1
27	PA.3 / QSPI0_SS / SPI0_SS / UART4_TXD / I2C0_SMBAL / UART1_TXD / I2C1_SCL / BPWM0_CH3 / PWM0_CH2 / CLKO / PWM1_BRAKE1
28	PA.2 / QSPI0_CLK / SPI0_CLK / UART4_RXD / I2C0_SMBSUS / UART1_RXD / I2C1_SDA / BPWM0_CH2 / PWM0_CH3
29	PA.1 / QSPI0_MISO0 / SPI0_MISO / UART0_TXD / UART1_nCTS / BPWM0_CH1 / PWM0_CH4
30	PA.0 / QSPI0_MOSI0 / SPI0_MOSI / UART0_RXD / UART1_nRTS / BPWM0_CH0 / PWM0_CH5
31	PF.15 / PWM0_BRAKE0 / PWM0_CH1 / TM2 / CLKO / INT4
32	nRESET
33	PF.0 / UART1_TXD / I2C1_SCL / UART0_TXD / BPWM1_CH0 / ICE_DAT
34	PF.1 / UART1_RXD / I2C1_SDA / UART0_RXD / BPWM1_CH1 / ICE_CLK

Pin	M032SG6AE Pin Function
35	PC.5 / EBI_AD5 / QSPI0_MISO1 / UART2_TXD / I2C1_SCL / UART4_TXD / PWM1_CH0
36	PC.4 / EBI_AD4 / QSPI0_MOSI1 / UART2_RXD / I2C1_SDA / UART4_RXD / PWM1_CH1
37	PC.3 / EBI_AD3 / QSPI0_SS / UART2_nRTS / I2C0_SMBAL / UART3_TXD / PWM1_CH2
38	PC.2 / EBI_AD2 / QSPI0_CLK / UART2_nCTS / I2C0_SMBSUS / UART3_RXD / PWM1_CH3
39	PC.1 / EBI_AD1 / QSPI0_MISO0 / UART2_TXD / I2C0_SCL / PWM1_CH4 / ACMP0_O / ADC0_ST
40	PC.0 / EBI_AD0 / QSPI0_MOSI0 / UART2_RXD / I2C0_SDA / PWM1_CH5 / ACMP1_O
41	PD.3 / EBI_AD10 / USCI0_CTL1 / SPI0_SS / UART3_nRTS / USCI1_CTL0 / UART0_TXD
42	PD.2 / EBI_AD11 / USCI0_DAT1 / SPI0_CLK / UART3_nCTS / UART0_RXD
43	PD.1 / EBI_AD12 / USCI0_DAT0 / SPI0_MISO / UART3_TXD
44	PD.0 / EBI_AD13 / USCI0_CLK / SPI0_MOSI / UART3_RXD / TM2
45	USB_VBUS
46	USB_D-
47	USB_D+
48	USB_V_{DD}33_CAP
49	VSS
50	LDO_CAP
51	V_{DD}
52	PC.14 / EBI_AD11 / SPI0_I2SMCLK / USCI0_CTL0 / QSPI0_CLK / TM1
53	PB.15 / ADC0_CH15 / EBI_AD12 / SPI0_SS / USCI0_CTL1 / UART0_nCTS / UART3_TXD / PWM1_CH0 / TM0_EXT / PWM0_BRAKE1
54	PB.14 / ADC0_CH14 / EBI_AD13 / SPI0_CLK / USCI0_DAT1 / UART0_nRTS / UART3_RXD / PWM1_CH1 / TM1_EXT / CLKO
55	PB.13 / ADC0_CH13 / ACMP0_P3 / ACMP1_P3 / EBI_AD14 / SPI0_MISO / USCI0_DAT0 / UART0_TXD / UART3_nRTS / PWM1_CH2 / TM2_EXT
56	PB.12 / ADC0_CH12 / ACMP0_P2 / ACMP1_P2 / EBI_AD15 / SPI0_MOSI / USCI0_CLK / UART0_RXD / UART3_nCTS / PWM1_CH3 / TM3_EXT
57	AV_{DD}
58	V_{REF}
59	AVSS
60	PB.11 / ADC0_CH11 / EBI_ADR16 / UART0_nCTS / UART4_TXD / I2C1_SCL / SPI0_I2SMCLK / BPWM1_CH0
61	PB.10 / ADC0_CH10 / EBI_ADR17 / USCI1_CTL0 / UART0_nRTS / UART4_RXD / I2C1_SDA / BPWM1_CH1
62	PB.9 / ADC0_CH9 / EBI_ADR18 / USCI1_CTL1 / UART0_TXD / UART1_nCTS / BPWM1_CH2
63	PB.8 / ADC0_CH8 / EBI_ADR19 / USCI1_CLK / UART0_RXD / UART1_nRTS / BPWM1_CH3
64	PB.7 / ADC0_CH7 / EBI_nWRL / USCI1_DAT0 / UART1_TXD / EBI_nCS0 / BPWM1_CH4 / PWM1_BRAKE0 / PWM1_CH4 / INT5 / ACMP0_O

Table 4.1-33 M032SG6AE Multi-function Pin Table

M032SG8AE

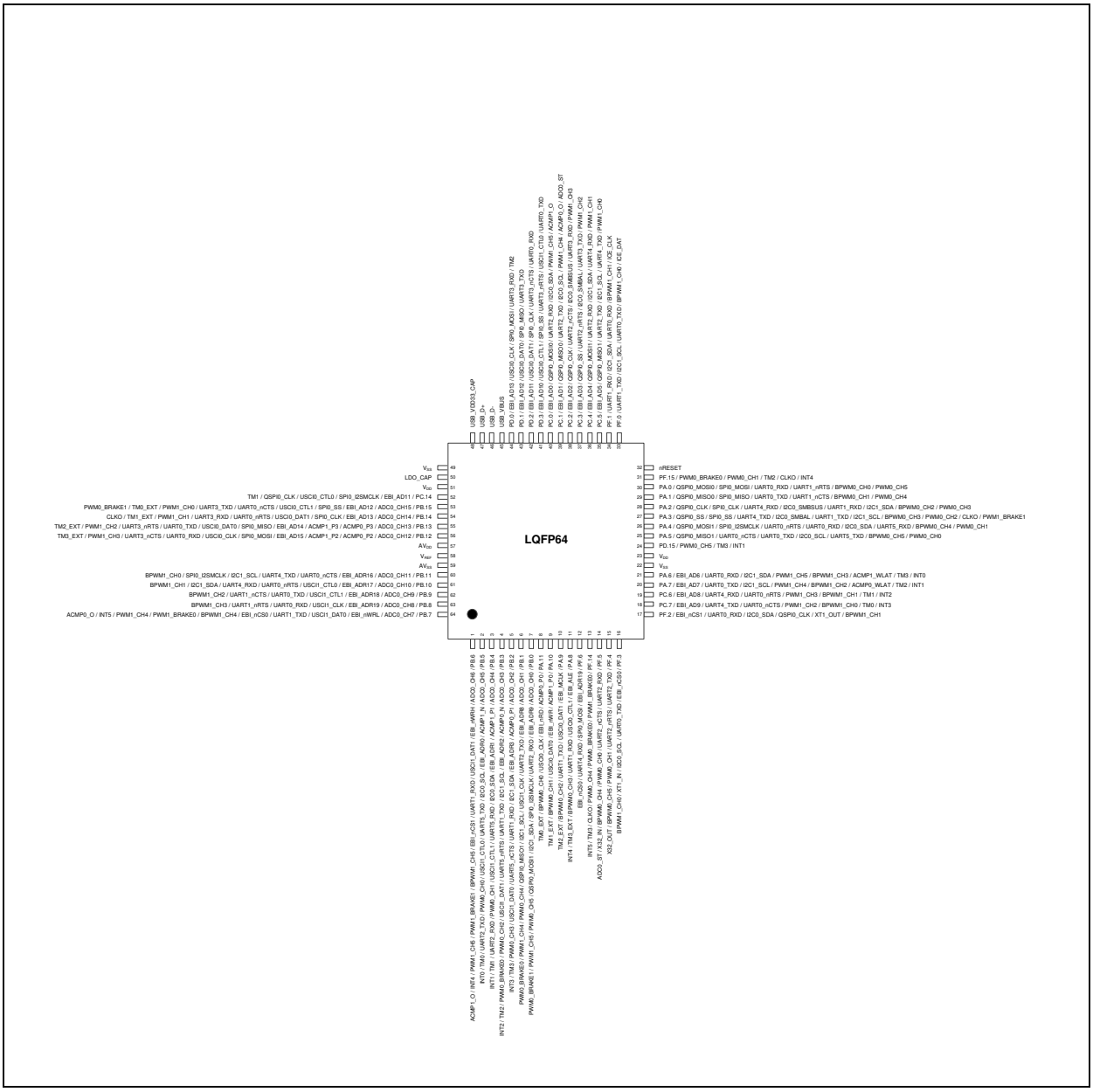

Figure 4.1-46 M032SG8AE Multi-function Pin Diagram

Pin	M032SG8AE Pin Function
1	PB.6 / ADC0_CH6 / EBI_nWRH / USCI1_DAT1 / UART1_RXD / EBI_nCS1 / BPWM1_CH5 / PWM1_BRAKE1 / PWM1_CH5 / INT4 / ACMP1_O
2	PB.5 / ADC0_CH5 / ACMP1_N / EBI_ADR0 / I2C0_SCL / UART5_TXD / USCI1_CTL0 / PWM0_CH0 / UART2_TXD / TM0 / INT0
3	PB.4 / ADC0_CH4 / ACMP1_P1 / EBI_ADR1 / I2C0_SDA / UART5_RXD / USCI1_CTL1 / PWM0_CH1 / UART2_RXD / TM1 / INT1
4	PB.3 / ADC0_CH3 / ACMP0_N / EBI_ADR2 / I2C1_SCL / UART1_TXD / UART5_nRTS / USCI1_DAT1 / PWM0_CH2 /

Pin	M032SG8AE Pin Function
	PWM0_BRAKE0 / TM2 / INT2
5	PB.2 / ADC0_CH2 / ACMP0_P1 / EBI_ADR3 / I2C1_SDA / UART1_RXD / UART5_nCTS / USCI1_DAT0 / PWM0_CH3 / TM3 / INT3
6	PB.1 / ADC0_CH1 / EBI_ADR8 / UART2_TXD / USCI1_CLK / I2C1_SCL / QSPI0_MISO1 / PWM0_CH4 / PWM1_CH4 / PWM0_BRAKE0
7	PB.0 / ADC0_CH0 / EBI_ADR9 / UART2_RXD / SPI0_I2SMCLK / I2C1_SDA / QSPI0_MOSI1 / PWM0_CH5 / PWM1_CH5 / PWM0_BRAKE1
8	PA.11 / ACMP0_P0 / EBI_nRD / USCI0_CLK / BPWM0_CH0 / TM0_EXT
9	PA.10 / ACMP1_P0 / EBI_nWR / USCI0_DAT0 / BPWM0_CH1 / TM1_EXT
10	PA.9 / EBI_MCLK / USCI0_DAT1 / UART1_TXD / BPWM0_CH2 / TM2_EXT
11	PA.8 / EBI_ALE / USCI0_CTL1 / UART1_RXD / BPWM0_CH3 / TM3_EXT / INT4
12	PF.6 / EBI_ADR19 / SPI0_MOSI / UART4_RXD / EBI_nCS0
13	PF.14 / PWM1_BRAKE0 / PWM0_BRAKE0 / PWM0_CH4 / CLKO / TM3 / INT5
14	PF.5 / UART2_RXD / UART2_nCTS / PWM0_CH0 / BPWM0_CH4 / X32_IN / ADC0_ST
15	PF.4 / UART2_TXD / UART2_nRTS / PWM0_CH1 / BPWM0_CH5 / X32_OUT
16	PF.3 / EBI_nCS0 / UART0_TXD / I2C0_SCL / XT1_IN / BPWM1_CH0
17	PF.2 / EBI_nCS1 / UART0_RXD / I2C0_SDA / QSPI0_CLK / XT1_OUT / BPWM1_CH1
18	PC.7 / EBI_AD9 / UART4_TXD / UART0_nCTS / PWM1_CH2 / BPWM1_CH0 / TM0 / INT3
19	PC.6 / EBI_AD8 / UART4_RXD / UART0_nRTS / PWM1_CH3 / BPWM1_CH1 / TM1 / INT2
20	PA.7 / EBI_AD7 / UART0_TXD / I2C1_SCL / PWM1_CH4 / BPWM1_CH2 / ACMP0_WLAT / TM2 / INT1
21	PA.6 / EBI_AD6 / UART0_RXD / I2C1_SDA / PWM1_CH5 / BPWM1_CH3 / ACMP1_WLAT / TM3 / INT0
22	VSS
23	V_{DD}
24	PD.15 / PWM0_CH5 / TM3 / INT1
25	PA.5 / QSPI0_MISO1 / UART0_nCTS / UART0_TXD / I2C0_SCL / UART5_TXD / BPWM0_CH5 / PWM0_CH0
26	PA.4 / QSPI0_MOSI1 / SPI0_I2SMCLK / UART0_nRTS / UART0_RXD / I2C0_SDA / UART5_RXD / BPWM0_CH4 / PWM0_CH1
27	PA.3 / QSPI0_SS / SPI0_SS / UART4_TXD / I2C0_SMBAL / UART1_TXD / I2C1_SCL / BPWM0_CH3 / PWM0_CH2 / CLKO / PWM1_BRAKE1
28	PA.2 / QSPI0_CLK / SPI0_CLK / UART4_RXD / I2C0_SMBSUS / UART1_RXD / I2C1_SDA / BPWM0_CH2 / PWM0_CH3
29	PA.1 / QSPI0_MISO0 / SPI0_MISO / UART0_TXD / UART1_nCTS / BPWM0_CH1 / PWM0_CH4
30	PA.0 / QSPI0_MOSI0 / SPI0_MOSI / UART0_RXD / UART1_nRTS / BPWM0_CH0 / PWM0_CH5
31	PF.15 / PWM0_BRAKE0 / PWM0_CH1 / TM2 / CLKO / INT4
32	nRESET
33	PF.0 / UART1_TXD / I2C1_SCL / UART0_TXD / BPWM1_CH0 / ICE_DAT
34	PF.1 / UART1_RXD / I2C1_SDA / UART0_RXD / BPWM1_CH1 / ICE_CLK
35	PC.5 / EBI_AD5 / QSPI0_MISO1 / UART2_TXD / I2C1_SCL / UART4_TXD / PWM1_CH0

Pin	M032SG8AE Pin Function
36	PC.4 / EBI_AD4 / QSPI0_MOSI1 / UART2_RXD / I2C1_SDA / UART4_RXD / PWM1_CH1
37	PC.3 / EBI_AD3 / QSPI0_SS / UART2_nRTS / I2C0_SMBAL / UART3_TXD / PWM1_CH2
38	PC.2 / EBI_AD2 / QSPI0_CLK / UART2_nCTS / I2C0_SMBSUS / UART3_RXD / PWM1_CH3
39	PC.1 / EBI_AD1 / QSPI0_MISO0 / UART2_TXD / I2C0_SCL / PWM1_CH4 / ACMP0_O / ADC0_ST
40	PC.0 / EBI_AD0 / QSPI0_MOSI0 / UART2_RXD / I2C0_SDA / PWM1_CH5 / ACMP1_O
41	PD.3 / EBI_AD10 / USCI0_CTL1 / SPI0_SS / UART3_nRTS / USCI1_CTL0 / UART0_TXD
42	PD.2 / EBI_AD11 / USCI0_DAT1 / SPI0_CLK / UART3_nCTS / UART0_RXD
43	PD.1 / EBI_AD12 / USCI0_DAT0 / SPI0_MISO / UART3_TXD
44	PD.0 / EBI_AD13 / USCI0_CLK / SPI0_MOSI / UART3_RXD / TM2
45	USB_VBUS
46	USB_D-
47	USB_D+
48	USB_V_{DD}33_CAP
49	VSS
50	LDO_CAP
51	V_{DD}
52	PC.14 / EBI_AD11 / SPI0_I2SMCLK / USCI0_CTL0 / QSPI0_CLK / TM1
53	PB.15 / ADC0_CH15 / EBI_AD12 / SPI0_SS / USCI0_CTL1 / UART0_nCTS / UART3_TXD / PWM1_CH0 / TM0_EXT / PWM0_BRAKE1
54	PB.14 / ADC0_CH14 / EBI_AD13 / SPI0_CLK / USCI0_DAT1 / UART0_nRTS / UART3_RXD / PWM1_CH1 / TM1_EXT / CLKO
55	PB.13 / ADC0_CH13 / ACMP0_P3 / ACMP1_P3 / EBI_AD14 / SPI0_MISO / USCI0_DAT0 / UART0_TXD / UART3_nRTS / PWM1_CH2 / TM2_EXT
56	PB.12 / ADC0_CH12 / ACMP0_P2 / ACMP1_P2 / EBI_AD15 / SPI0_MOSI / USCI0_CLK / UART0_RXD / UART3_nCTS / PWM1_CH3 / TM3_EXT
57	AV_{DD}
58	V_{REF}
59	AVSS
60	PB.11 / ADC0_CH11 / EBI_ADR16 / UART0_nCTS / UART4_TXD / I2C1_SCL / SPI0_I2SMCLK / BPWM1_CH0
61	PB.10 / ADC0_CH10 / EBI_ADR17 / USCI1_CTL0 / UART0_nRTS / UART4_RXD / I2C1_SDA / BPWM1_CH1
62	PB.9 / ADC0_CH9 / EBI_ADR18 / USCI1_CTL1 / UART0_TXD / UART1_nCTS / BPWM1_CH2
63	PB.8 / ADC0_CH8 / EBI_ADR19 / USCI1_CLK / UART0_RXD / UART1_nRTS / BPWM1_CH3
64	PB.7 / ADC0_CH7 / EBI_nWRL / USCI1_DAT0 / UART1_TXD / EBI_nCS0 / BPWM1_CH4 / PWM1_BRAKE0 / PWM1_CH4 / INT5 / ACMP0_O

Table 4.1-34 M032SG8AE Multi-function Pin Table

M032SIAAE

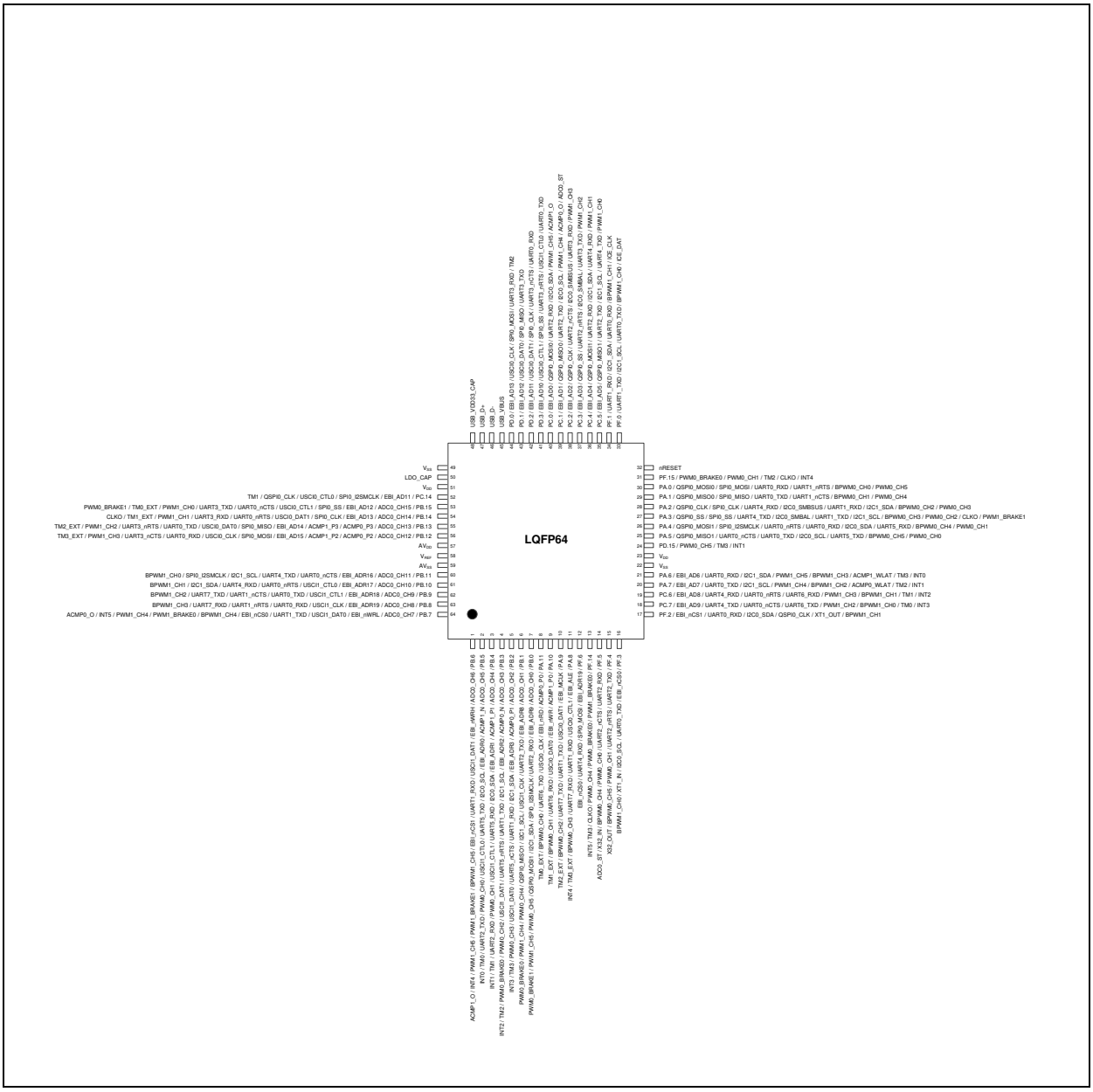

Figure 4.1-47 M032SIAAE Multi-function Pin Diagram

Pin	M032SIAAE Pin Function
1	PB.6 / ADC0_CH6 / EBI_nWRH / USCI1_DAT1 / UART1_RXD / EBI_nCS1 / BPWM1_CH5 / PWM1_BRAKE1 / PWM1_CH5 / INT4 / ACMP1_O
2	PB.5 / ADC0_CH5 / ACMP1_N / EBI_ADR0 / I2C0_SCL / UART5_TXD / USCI1_CTL0 / PWM0_CH0 / UART2_TXD / TM0 / INT0
3	PB.4 / ADC0_CH4 / ACMP1_P1 / EBI_ADR1 / I2C0_SDA / UART5_RXD / USCI1_CTL1 / PWM0_CH1 / UART2_RXD / TM1 / INT1
4	PB.3 / ADC0_CH3 / ACMP0_N / EBI_ADR2 / I2C1_SCL / UART1_TXD / UART5_nRTS / USCI1_DAT1 / PWM0_CH2 / PWM0_BRAKE0 / TM2 / INT2

Pin	M032SIAAE Pin Function
5	PB.2 / ADC0_CH2 / ACMP0_P1 / EBI_ADR3 / I2C1_SDA / UART1_RXD / UART5_nCTS / USCI1_DAT0 / PWM0_CH3 / TM3 / INT3
6	PB.1 / ADC0_CH1 / EBI_ADR8 / UART2_TXD / USCI1_CLK / I2C1_SCL / QSPI0_MISO1 / PWM0_CH4 / PWM1_CH4 / PWM0_BRAKE0
7	PB.0 / ADC0_CH0 / EBI_ADR9 / UART2_RXD / SPI0_I2SMCLK / I2C1_SDA / QSPI0_MOSI1 / PWM0_CH5 / PWM1_CH5 / PWM0_BRAKE1
8	PA.11 / ACMP0_P0 / EBI_nRD / USCI0_CLK / UART6_TXD / BPWM0_CH0 / TM0_EXT
9	PA.10 / ACMP1_P0 / EBI_nWR / USCI0_DAT0 / UART6_RXD / BPWM0_CH1 / TM1_EXT
10	PA.9 / EBI_MCLK / USCI0_DAT1 / UART1_TXD / UART7_TXD / BPWM0_CH2 / TM2_EXT
11	PA.8 / EBI_ALE / USCI0_CTL1 / UART1_RXD / UART7_RXD / BPWM0_CH3 / TM3_EXT / INT4
12	PF.6 / EBI_ADR19 / SPI0_MOSI / UART4_RXD / EBI_nCS0
13	PF.14 / PWM1_BRAKE0 / PWM0_BRAKE0 / PWM0_CH4 / CLKO / TM3 / INT5
14	PF.5 / UART2_RXD / UART2_nCTS / PWM0_CH0 / BPWM0_CH4 / X32_IN / ADC0_ST
15	PF.4 / UART2_TXD / UART2_nRTS / PWM0_CH1 / BPWM0_CH5 / X32_OUT
16	PF.3 / EBI_nCS0 / UART0_TXD / I2C0_SCL / XT1_IN / BPWM1_CH0
17	PF.2 / EBI_nCS1 / UART0_RXD / I2C0_SDA / QSPI0_CLK / XT1_OUT / BPWM1_CH1
18	PC.7 / EBI_AD9 / UART4_TXD / UART0_nCTS / UART6_TXD / PWM1_CH2 / BPWM1_CH0 / TM0 / INT3
19	PC.6 / EBI_AD8 / UART4_RXD / UART0_nRTS / UART6_RXD / PWM1_CH3 / BPWM1_CH1 / TM1 / INT2
20	PA.7 / EBI_AD7 / UART0_TXD / I2C1_SCL / PWM1_CH4 / BPWM1_CH2 / ACMP0_WLAT / TM2 / INT1
21	PA.6 / EBI_AD6 / UART0_RXD / I2C1_SDA / PWM1_CH5 / BPWM1_CH3 / ACMP1_WLAT / TM3 / INT0
22	VSS
23	V_{DD}
24	PD.15 / PWM0_CH5 / TM3 / INT1
25	PA.5 / QSPI0_MISO1 / UART0_nCTS / UART0_TXD / I2C0_SCL / UART5_TXD / BPWM0_CH5 / PWM0_CH0
26	PA.4 / QSPI0_MOSI1 / SPI0_I2SMCLK / UART0_nRTS / UART0_RXD / I2C0_SDA / UART5_RXD / BPWM0_CH4 / PWM0_CH1
27	PA.3 / QSPI0_SS / SPI0_SS / UART4_TXD / I2C0_SMBAL / UART1_TXD / I2C1_SCL / BPWM0_CH3 / PWM0_CH2 / CLKO / PWM1_BRAKE1
28	PA.2 / QSPI0_CLK / SPI0_CLK / UART4_RXD / I2C0_SMBSUS / UART1_RXD / I2C1_SDA / BPWM0_CH2 / PWM0_CH3
29	PA.1 / QSPI0_MISO0 / SPI0_MISO / UART0_TXD / UART1_nCTS / BPWM0_CH1 / PWM0_CH4
30	PA.0 / QSPI0_MOSI0 / SPI0_MOSI / UART0_RXD / UART1_nRTS / BPWM0_CH0 / PWM0_CH5
31	PF.15 / PWM0_BRAKE0 / PWM0_CH1 / TM2 / CLKO / INT4
32	nRESET
33	PF.0 / UART1_TXD / I2C1_SCL / UART0_TXD / BPWM1_CH0 / ICE_DAT
34	PF.1 / UART1_RXD / I2C1_SDA / UART0_RXD / BPWM1_CH1 / ICE_CLK
35	PC.5 / EBI_AD5 / QSPI0_MISO1 / UART2_TXD / I2C1_SCL / UART4_TXD / PWM1_CH0

Pin	M032SIAAE Pin Function
36	PC.4 / EBI_AD4 / QSPI0_MOSI1 / UART2_RXD / I2C1_SDA / UART4_RXD / PWM1_CH1
37	PC.3 / EBI_AD3 / QSPI0_SS / UART2_nRTS / I2C0_SMBAL / UART3_TXD / PWM1_CH2
38	PC.2 / EBI_AD2 / QSPI0_CLK / UART2_nCTS / I2C0_SMBSUS / UART3_RXD / PWM1_CH3
39	PC.1 / EBI_AD1 / QSPI0_MISO0 / UART2_TXD / I2C0_SCL / PWM1_CH4 / ACMP0_O / ADC0_ST
40	PC.0 / EBI_AD0 / QSPI0_MOSI0 / UART2_RXD / I2C0_SDA / PWM1_CH5 / ACMP1_O
41	PD.3 / EBI_AD10 / USCI0_CTL1 / SPI0_SS / UART3_nRTS / USCI1_CTL0 / UART0_TXD
42	PD.2 / EBI_AD11 / USCI0_DAT1 / SPI0_CLK / UART3_nCTS / UART0_RXD
43	PD.1 / EBI_AD12 / USCI0_DAT0 / SPI0_MISO / UART3_TXD
44	PD.0 / EBI_AD13 / USCI0_CLK / SPI0_MOSI / UART3_RXD / TM2
45	USB_VBUS
46	USB_D-
47	USB_D+
48	USB_V_{DD}33_CAP
49	VSS
50	LDO_CAP
51	V_{DD}
52	PC.14 / EBI_AD11 / SPI0_I2SMCLK / USCI0_CTL0 / QSPI0_CLK / TM1
53	PB.15 / ADC0_CH15 / EBI_AD12 / SPI0_SS / USCI0_CTL1 / UART0_nCTS / UART3_TXD / PWM1_CH0 / TM0_EXT / PWM0_BRAKE1
54	PB.14 / ADC0_CH14 / EBI_AD13 / SPI0_CLK / USCI0_DAT1 / UART0_nRTS / UART3_RXD / PWM1_CH1 / TM1_EXT / CLKO
55	PB.13 / ADC0_CH13 / ACMP0_P3 / ACMP1_P3 / EBI_AD14 / SPI0_MISO / USCI0_DAT0 / UART0_TXD / UART3_nRTS / PWM1_CH2 / TM2_EXT
56	PB.12 / ADC0_CH12 / ACMP0_P2 / ACMP1_P2 / EBI_AD15 / SPI0_MOSI / USCI0_CLK / UART0_RXD / UART3_nCTS / PWM1_CH3 / TM3_EXT
57	AV_{DD}
58	V_{REF}
59	AVSS
60	PB.11 / ADC0_CH11 / EBI_ADR16 / UART0_nCTS / UART4_TXD / I2C1_SCL / SPI0_I2SMCLK / BPWM1_CH0
61	PB.10 / ADC0_CH10 / EBI_ADR17 / USCI1_CTL0 / UART0_nRTS / UART4_RXD / I2C1_SDA / BPWM1_CH1
62	PB.9 / ADC0_CH9 / EBI_ADR18 / USCI1_CTL1 / UART0_TXD / UART1_nCTS / UART7_TXD / BPWM1_CH2
63	PB.8 / ADC0_CH8 / EBI_ADR19 / USCI1_CLK / UART0_RXD / UART1_nRTS / UART7_RXD / BPWM1_CH3
64	PB.7 / ADC0_CH7 / EBI_nWRL / USCI1_DAT0 / UART1_TXD / EBI_nCS0 / BPWM1_CH4 / PWM1_BRAKE0 / PWM1_CH4 / INT5 / ACMP0_O

Table 4.1-35 M032SIAAE Multi-function Pin Table

4.1.4.6 M032 Series LQFP 128-Pin Multi-function Pin Diagram

Corresponding Part Number: M032KG6AE, M032KG8AE, M032KIAAE

M032KG6AE

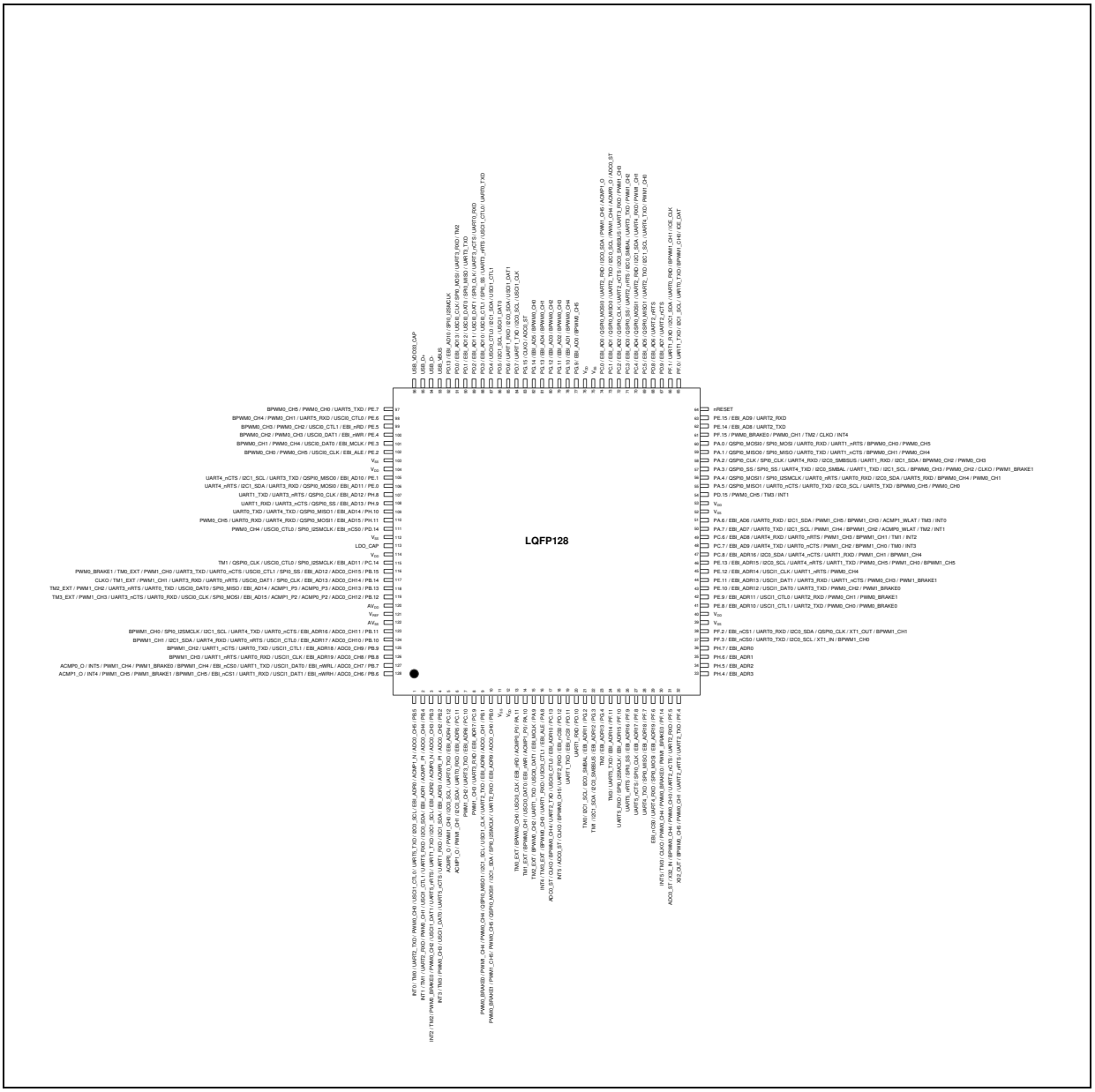

Figure 4.1-48 M032KG6AE Multi-function Pin Diagram

Pin	M032KG6AE Pin Function
1	PB.5 / ADC0_CH5 / ACMP1_N / EBI_ADR0 / I2C0_SCL / UART5_TXD / USCI1_CTL0 / PWM0_CH0 / UART2_TXD / TM0 / INT0
2	PB.4 / ADC0_CH4 / ACMP1_P1 / EBI_ADR1 / I2C0_SDA / UART5_RXD / USCI1_CTL1 / PWM0_CH1 / UART2_RXD / TM1 / INT1

Pin	M032KG6AE Pin Function
3	PB.3 / ADC0_CH3 / ACMP0_N / EBI_ADR2 / I2C1_SCL / UART1_TXD / UART5_nRTS / USCI1_DAT1 / PWM0_CH2 / PWM0_BRAKE0 / TM2 / INT2
4	PB.2 / ADC0_CH2 / ACMP0_P1 / EBI_ADR3 / I2C1_SDA / UART1_RXD / UART5_nCTS / USCI1_DAT0 / PWM0_CH3 / TM3 / INT3
5	PC.12 / EBI_ADR4 / UART0_TXD / I2C0_SCL / PWM1_CH0 / ACMP0_O
6	PC.11 / EBI_ADR5 / UART0_RXD / I2C0_SDA / PWM1_CH1 / ACMP1_O
7	PC.10 / EBI_ADR6 / UART3_TXD / PWM1_CH2
8	PC.9 / EBI_ADR7 / UART3_RXD / PWM1_CH3
9	PB.1 / ADC0_CH1 / EBI_ADR8 / UART2_TXD / USCI1_CLK / I2C1_SCL / QSPI0_MISO1 / PWM0_CH4 / PWM1_CH4 / PWM0_BRAKE0
10	PB.0 / ADC0_CH0 / EBI_ADR9 / UART2_RXD / SPI0_I2SMCLK / I2C1_SDA / QSPI0_MOSI1 / PWM0_CH5 / PWM1_CH5 / PWM0_BRAKE1
11	VSS
12	V_{DD}
13	PA.11 / ACMP0_P0 / EBI_nRD / USCI0_CLK / BPWM0_CH0 / TM0_EXT
14	PA.10 / ACMP1_P0 / EBI_nWR / USCI0_DAT0 / BPWM0_CH1 / TM1_EXT
15	PA.9 / EBI_MCLK / USCI0_DAT1 / UART1_TXD / BPWM0_CH2 / TM2_EXT
16	PA.8 / EBI_ALE / USCI0_CTL1 / UART1_RXD / BPWM0_CH3 / TM3_EXT / INT4
17	PC.13 / EBI_ADR10 / USCI0_CTL0 / UART2_TXD / BPWM0_CH4 / CLKO / ADC0_ST
18	PD.12 / EBI_nCS0 / UART2_RXD / BPWM0_CH5 / CLKO / ADC0_ST / INT5
19	PD.11 / EBI_nCS1 / UART1_TXD
20	PD.10 / UART1_RXD
21	PG.2 / EBI_ADR11 / I2C0_SMBAL / I2C1_SCL / TM0
22	PG.3 / EBI_ADR12 / I2C0_SMBSUS / I2C1_SDA / TM1
23	PG.4 / EBI_ADR13 / TM2
24	PF.11 / EBI_ADR14 / UART5_TXD / TM3
25	PF.10 / EBI_ADR15 / SPI0_I2SMCLK / UART5_RXD
26	PF.9 / EBI_ADR16 / SPI0_SS / UART5_nRTS
27	PF.8 / EBI_ADR17 / SPI0_CLK / UART5_nCTS
28	PF.7 / EBI_ADR18 / SPI0_MISO / UART4_TXD
29	PF.6 / EBI_ADR19 / SPI0_MOSI / UART4_RXD / EBI_nCS0
30	PF.14 / PWM1_BRAKE0 / PWM0_BRAKE0 / PWM0_CH4 / CLKO / TM3 / INT5
31	PF.5 / UART2_RXD / UART2_nCTS / PWM0_CH0 / BPWM0_CH4 / X32_IN / ADC0_ST
32	PF.4 / UART2_TXD / UART2_nRTS / PWM0_CH1 / BPWM0_CH5 / X32_OUT
33	PH.4 / EBI_ADR3
34	PH.5 / EBI_ADR2

Pin	M032KG6AE Pin Function
35	PH.6 / EBI_ADR1
36	PH.7 / EBI_ADR0
37	PF.3 / EBI_nCS0 / UART0_TXD / I2C0_SCL / XT1_IN / BPWM1_CH0
38	PF.2 / EBI_nCS1 / UART0_RXD / I2C0_SDA / QSPI0_CLK / XT1_OUT / BPWM1_CH1
39	VSS
40	V_{DD}
41	PE.8 / EBI_ADR10 / USCI1_CTL1 / UART2_TXD / PWM0_CH0 / PWM0_BRAKE0
42	PE.9 / EBI_ADR11 / USCI1_CTL0 / UART2_RXD / PWM0_CH1 / PWM0_BRAKE1
43	PE.10 / EBI_ADR12 / USCI1_DAT0 / UART3_TXD / PWM0_CH2 / PWM1_BRAKE0
44	PE.11 / EBI_ADR13 / USCI1_DAT1 / UART3_RXD / UART1_nCTS / PWM0_CH3 / PWM1_BRAKE1
45	PE.12 / EBI_ADR14 / USCI1_CLK / UART1_nRTS / PWM0_CH4
46	PE.13 / EBI_ADR15 / I2C0_SCL / UART4_nRTS / UART1_TXD / PWM0_CH5 / PWM1_CH0 / BPWM1_CH5
47	PC.8 / EBI_ADR16 / I2C0_SDA / UART4_nCTS / UART1_RXD / PWM1_CH1 / BPWM1_CH4
48	PC.7 / EBI_AD9 / UART4_TXD / UART0_nCTS / PWM1_CH2 / BPWM1_CH0 / TM0 / INT3
49	PC.6 / EBI_AD8 / UART4_RXD / UART0_nRTS / PWM1_CH3 / BPWM1_CH1 / TM1 / INT2
50	PA.7 / EBI_AD7 / UART0_TXD / I2C1_SCL / PWM1_CH4 / BPWM1_CH2 / ACMP0_WLAT / TM2 / INT1
51	PA.6 / EBI_AD6 / UART0_RXD / I2C1_SDA / PWM1_CH5 / BPWM1_CH3 / ACMP1_WLAT / TM3 / INT0
52	VSS
53	V_{DD}
54	PD.15 / PWM0_CH5 / TM3 / INT1
55	PA.5 / QSPI0_MISO1 / UART0_nCTS / UART0_TXD / I2C0_SCL / UART5_TXD / BPWM0_CH5 / PWM0_CH0
56	PA.4 / QSPI0_MOSI1 / SPI0_I2SMCLK / UART0_nRTS / UART0_RXD / I2C0_SDA / UART5_RXD / BPWM0_CH4 / PWM0_CH1
57	PA.3 / QSPI0_SS / SPI0_SS / UART4_TXD / I2C0_SMBAL / UART1_TXD / I2C1_SCL / BPWM0_CH3 / PWM0_CH2 / CLKO / PWM1_BRAKE1
58	PA.2 / QSPI0_CLK / SPI0_CLK / UART4_RXD / I2C0_SMBSUS / UART1_RXD / I2C1_SDA / BPWM0_CH2 / PWM0_CH3
59	PA.1 / QSPI0_MISO0 / SPI0_MISO / UART0_TXD / UART1_nCTS / BPWM0_CH1 / PWM0_CH4
60	PA.0 / QSPI0_MOSI0 / SPI0_MOSI / UART0_RXD / UART1_nRTS / BPWM0_CH0 / PWM0_CH5
61	PF.15 / PWM0_BRAKE0 / PWM0_CH1 / TM2 / CLKO / INT4
62	PE.14 / EBI_AD8 / UART2_TXD
63	PE.15 / EBI_AD9 / UART2_RXD
64	nRESET
65	PF.0 / UART1_TXD / I2C1_SCL / UART0_TXD / BPWM1_CH0 / ICE_DAT
66	PF.1 / UART1_RXD / I2C1_SDA / UART0_RXD / BPWM1_CH1 / ICE_CLK
67	PD.9 / EBI_AD7 / UART2_nCTS

Pin	M032KG6AE Pin Function
68	PD.8 / EBI_AD6 / UART2_nRTS
69	PC.5 / EBI_AD5 / QSPI0_MISO1 / UART2_TXD / I2C1_SCL / UART4_TXD / PWM1_CH0
70	PC.4 / EBI_AD4 / QSPI0_MOSI1 / UART2_RXD / I2C1_SDA / UART4_RXD / PWM1_CH1
71	PC.3 / EBI_AD3 / QSPI0_SS / UART2_nRTS / I2C0_SMBAL / UART3_TXD / PWM1_CH2
72	PC.2 / EBI_AD2 / QSPI0_CLK / UART2_nCTS / I2C0_SMBSUS / UART3_RXD / PWM1_CH3
73	PC.1 / EBI_AD1 / QSPI0_MISO0 / UART2_TXD / I2C0_SCL / PWM1_CH4 / ACMP0_O / ADC0_ST
74	PC.0 / EBI_AD0 / QSPI0_MOSI0 / UART2_RXD / I2C0_SDA / PWM1_CH5 / ACMP1_O
75	VSS
76	V_{DD}
77	PG.9 / EBI_AD0 / BPWM0_CH5
78	PG.10 / EBI_AD1 / BPWM0_CH4
79	PG.11 / EBI_AD2 / BPWM0_CH3
80	PG.12 / EBI_AD3 / BPWM0_CH2
81	PG.13 / EBI_AD4 / BPWM0_CH1
82	PG.14 / EBI_AD5 / BPWM0_CH0
83	PG.15 / CLKO / ADC0_ST
84	PD.7 / UART1_TXD / I2C0_SCL / USCI1_CLK
85	PD.6 / UART1_RXD / I2C0_SDA / USCI1_DAT1
86	PD.5 / I2C1_SCL / USCI1_DAT0
87	PD.4 / USCI0_CTL0 / I2C1_SDA / USCI1_CTL1
88	PD.3 / EBI_AD10 / USCI0_CTL1 / SPI0_SS / UART3_nRTS / USCI1_CTL0 / UART0_TXD
89	PD.2 / EBI_AD11 / USCI0_DAT1 / SPI0_CLK / UART3_nCTS / UART0_RXD
90	PD.1 / EBI_AD12 / USCI0_DAT0 / SPI0_MISO / UART3_TXD
91	PD.0 / EBI_AD13 / USCI0_CLK / SPI0_MOSI / UART3_RXD / TM2
92	PD.13 / EBI_AD10 / SPI0_I2SMCLK
93	USB_VBUS
94	USB_D-
95	USB_D+
96	USB_V_{DD}33_CAP
97	PE.7 / UART5_TXD / PWM0_CH0 / BPWM0_CH5
98	PE.6 / USCI0_CTL0 / UART5_RXD / PWM0_CH1 / BPWM0_CH4
99	PE.5 / EBI_nRD / USCI0_CTL1 / PWM0_CH2 / BPWM0_CH3
100	PE.4 / EBI_nWR / USCI0_DAT1 / PWM0_CH3 / BPWM0_CH2
101	PE.3 / EBI_MCLK / USCI0_DAT0 / PWM0_CH4 / BPWM0_CH1

Pin	M032KG6AE Pin Function
102	PE.2 / EBI_ALE / USCI0_CLK / PWM0_CH5 / BPWM0_CH0
103	VSS
104	V_{DD}
105	PE.1 / EBI_AD10 / QSPI0_MISO0 / UART3_TXD / I2C1_SCL / UART4_nCTS
106	PE.0 / EBI_AD11 / QSPI0_MOSI0 / UART3_RXD / I2C1_SDA / UART4_nRTS
107	PH.8 / EBI_AD12 / QSPI0_CLK / UART3_nRTS / UART1_TXD
108	PH.9 / EBI_AD13 / QSPI0_SS / UART3_nCTS / UART1_RXD
109	PH.10 / EBI_AD14 / QSPI0_MISO1 / UART4_TXD / UART0_TXD
110	PH.11 / EBI_AD15 / QSPI0_MOSI1 / UART4_RXD / UART0_RXD / PWM0_CH5
111	PD.14 / EBI_nCS0 / SPI0_I2SMCLK / USCI0_CTL0 / PWM0_CH4
112	VSS
113	LDO_CAP
114	V_{DD}
115	PC.14 / EBI_AD11 / SPI0_I2SMCLK / USCI0_CTL0 / QSPI0_CLK / TM1
116	PB.15 / ADC0_CH15 / EBI_AD12 / SPI0_SS / USCI0_CTL1 / UART0_nCTS / UART3_TXD / PWM1_CH0 / TM0_EXT / PWM0_BRAKE1
117	PB.14 / ADC0_CH14 / EBI_AD13 / SPI0_CLK / USCI0_DAT1 / UART0_nRTS / UART3_RXD / PWM1_CH1 / TM1_EXT / CLKO
118	PB.13 / ADC0_CH13 / ACMP0_P3 / ACMP1_P3 / EBI_AD14 / SPI0_MISO / USCI0_DAT0 / UART0_TXD / UART3_nRTS / PWM1_CH2 / TM2_EXT
119	PB.12 / ADC0_CH12 / ACMP0_P2 / ACMP1_P2 / EBI_AD15 / SPI0_MOSI / USCI0_CLK / UART0_RXD / UART3_nCTS / PWM1_CH3 / TM3_EXT
120	AV_{DD}
121	V_{REF}
122	AVSS
123	PB.11 / ADC0_CH11 / EBI_ADR16 / UART0_nCTS / UART4_TXD / I2C1_SCL / SPI0_I2SMCLK / BPWM1_CH0
124	PB.10 / ADC0_CH10 / EBI_ADR17 / USCI1_CTL0 / UART0_nRTS / UART4_RXD / I2C1_SDA / BPWM1_CH1
125	PB.9 / ADC0_CH9 / EBI_ADR18 / USCI1_CTL1 / UART0_TXD / UART1_nCTS / BPWM1_CH2
126	PB.8 / ADC0_CH8 / EBI_ADR19 / USCI1_CLK / UART0_RXD / UART1_nRTS / BPWM1_CH3
127	PB.7 / ADC0_CH7 / EBI_nWRL / USCI1_DAT0 / UART1_TXD / EBI_nCS0 / BPWM1_CH4 / PWM1_BRAKE0 / PWM1_CH4 / INT5 / ACMP0_O
128	PB.6 / ADC0_CH6 / EBI_nWRH / USCI1_DAT1 / UART1_RXD / EBI_nCS1 / BPWM1_CH5 / PWM1_BRAKE1 / PWM1_CH5 / INT4 / ACMP1_O

Table 4.1-36 M032KG6AE Multi-function Pin Table

M032KG8AE

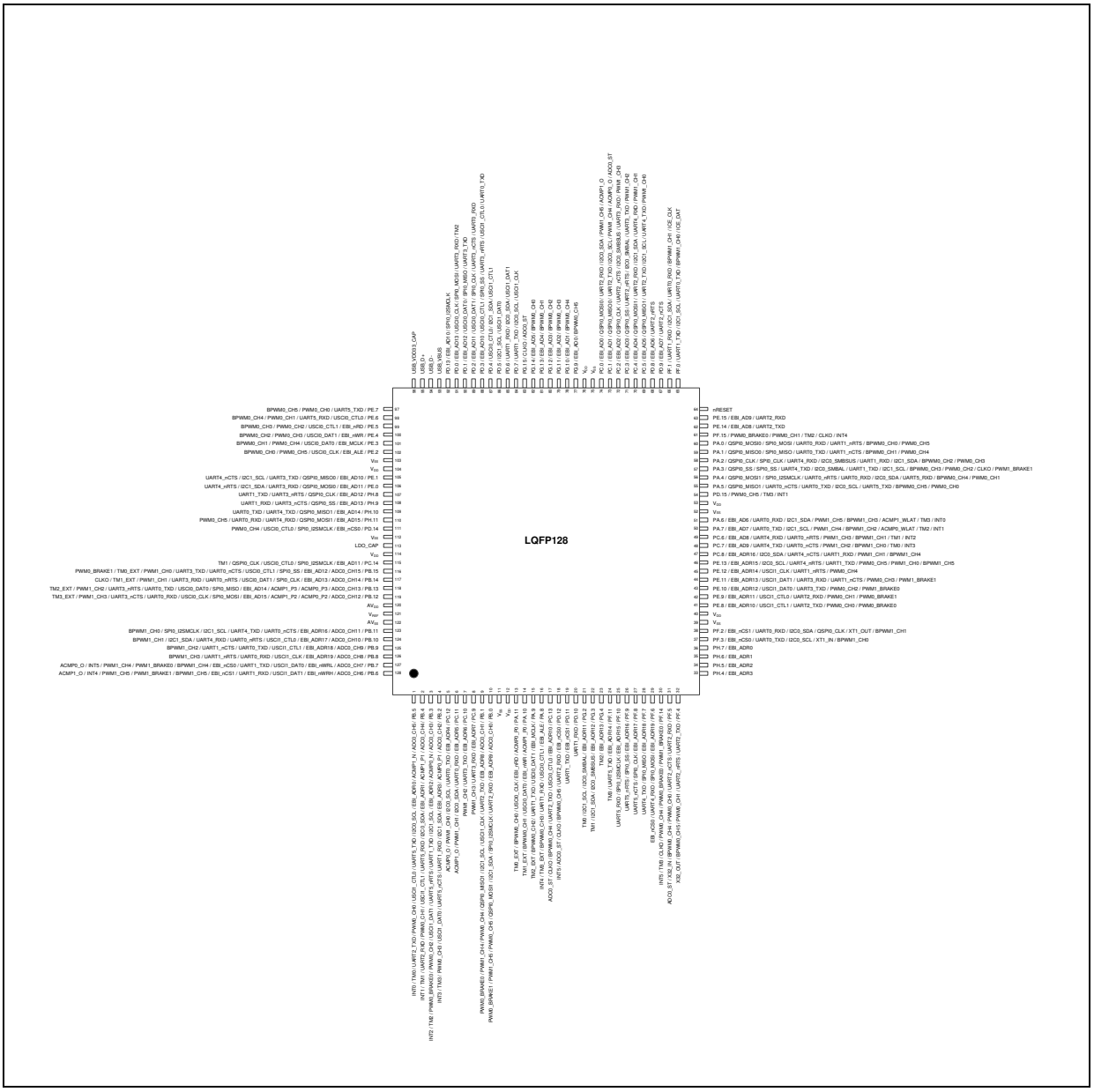

Figure 4.1-49 M032KG8AE Multi-function Pin Diagram

Pin	M032KG8AE Pin Function
1	PB.5 / ADC0_CH5 / ACMP1_N / EBI_ADR0 / I2C0_SCL / UART5_TXD / USCI1_CTL0 / PWM0_CH0 / UART2_TXD / TM0 / INT0
2	PB.4 / ADC0_CH4 / ACMP1_P1 / EBI_ADR1 / I2C0_SDA / UART5_RXD / USCI1_CTL1 / PWM0_CH1 / UART2_RXD / TM1 / INT1
3	PB.3 / ADC0_CH3 / ACMP0_N / EBI_ADR2 / I2C1_SCL / UART1_TXD / UART5_nRTS / USCI1_DAT1 / PWM0_CH2 / PWM0_BRAKE0 / TM2 / INT2
4	PB.2 / ADC0_CH2 / ACMP0_P1 / EBI_ADR3 / I2C1_SDA / UART1_RXD / UART5_nCTS / USCI1_DAT0 / PWM0_CH3 / TM3 / INT3

Pin	M032KG8AE Pin Function
5	PC.12 / EBI_ADR4 / UART0_TXD / I2C0_SCL / PWM1_CH0 / ACMP0_O
6	PC.11 / EBI_ADR5 / UART0_RXD / I2C0_SDA / PWM1_CH1 / ACMP1_O
7	PC.10 / EBI_ADR6 / UART3_TXD / PWM1_CH2
8	PC.9 / EBI_ADR7 / UART3_RXD / PWM1_CH3
9	PB.1 / ADC0_CH1 / EBI_ADR8 / UART2_TXD / USCI1_CLK / I2C1_SCL / QSPI0_MISO1 / PWM0_CH4 / PWM1_CH4 / PWM0_BRAKE0
10	PB.0 / ADC0_CH0 / EBI_ADR9 / UART2_RXD / SPI0_I2SMCLK / I2C1_SDA / QSPI0_MOSI1 / PWM0_CH5 / PWM1_CH5 / PWM0_BRAKE1
11	VSS
12	V_{DD}
13	PA.11 / ACMP0_P0 / EBI_nRD / USCI0_CLK / BPWM0_CH0 / TM0_EXT
14	PA.10 / ACMP1_P0 / EBI_nWR / USCI0_DAT0 / BPWM0_CH1 / TM1_EXT
15	PA.9 / EBI_MCLK / USCI0_DAT1 / UART1_TXD / BPWM0_CH2 / TM2_EXT
16	PA.8 / EBI_ALE / USCI0_CTL1 / UART1_RXD / BPWM0_CH3 / TM3_EXT / INT4
17	PC.13 / EBI_ADR10 / USCI0_CTL0 / UART2_TXD / BPWM0_CH4 / CLKO / ADC0_ST
18	PD.12 / EBI_nCS0 / UART2_RXD / BPWM0_CH5 / CLKO / ADC0_ST / INT5
19	PD.11 / EBI_nCS1 / UART1_TXD
20	PD.10 / UART1_RXD
21	PG.2 / EBI_ADR11 / I2C0_SMBAL / I2C1_SCL / TM0
22	PG.3 / EBI_ADR12 / I2C0_SMBSUS / I2C1_SDA / TM1
23	PG.4 / EBI_ADR13 / TM2
24	PF.11 / EBI_ADR14 / UART5_TXD / TM3
25	PF.10 / EBI_ADR15 / SPI0_I2SMCLK / UART5_RXD
26	PF.9 / EBI_ADR16 / SPI0_SS / UART5_nRTS
27	PF.8 / EBI_ADR17 / SPI0_CLK / UART5_nCTS
28	PF.7 / EBI_ADR18 / SPI0_MISO / UART4_TXD
29	PF.6 / EBI_ADR19 / SPI0_MOSI / UART4_RXD / EBI_nCS0
30	PF.14 / PWM1_BRAKE0 / PWM0_BRAKE0 / PWM0_CH4 / CLKO / TM3 / INT5
31	PF.5 / UART2_RXD / UART2_nCTS / PWM0_CH0 / BPWM0_CH4 / X32_IN / ADC0_ST
32	PF.4 / UART2_TXD / UART2_nRTS / PWM0_CH1 / BPWM0_CH5 / X32_OUT
33	PH.4 / EBI_ADR3
34	PH.5 / EBI_ADR2
35	PH.6 / EBI_ADR1
36	PH.7 / EBI_ADR0
37	PF.3 / EBI_nCS0 / UART0_TXD / I2C0_SCL / XT1_IN / BPWM1_CH0

Pin	M032KG8AE Pin Function
38	PF.2 / EBI_nCS1 / UART0_RXD / I2C0_SDA / QSPI0_CLK / XT1_OUT / BPWM1_CH1
39	VSS
40	V_{DD}
41	PE.8 / EBI_ADR10 / USCI1_CTL1 / UART2_TXD / PWM0_CH0 / PWM0_BRAKE0
42	PE.9 / EBI_ADR11 / USCI1_CTL0 / UART2_RXD / PWM0_CH1 / PWM0_BRAKE1
43	PE.10 / EBI_ADR12 / USCI1_DAT0 / UART3_TXD / PWM0_CH2 / PWM1_BRAKE0
44	PE.11 / EBI_ADR13 / USCI1_DAT1 / UART3_RXD / UART1_nCTS / PWM0_CH3 / PWM1_BRAKE1
45	PE.12 / EBI_ADR14 / USCI1_CLK / UART1_nRTS / PWM0_CH4
46	PE.13 / EBI_ADR15 / I2C0_SCL / UART4_nRTS / UART1_TXD / PWM0_CH5 / PWM1_CH0 / BPWM1_CH5
47	PC.8 / EBI_ADR16 / I2C0_SDA / UART4_nCTS / UART1_RXD / PWM1_CH1 / BPWM1_CH4
48	PC.7 / EBI_AD9 / UART4_TXD / UART0_nCTS / PWM1_CH2 / BPWM1_CH0 / TM0 / INT3
49	PC.6 / EBI_AD8 / UART4_RXD / UART0_nRTS / PWM1_CH3 / BPWM1_CH1 / TM1 / INT2
50	PA.7 / EBI_AD7 / UART0_TXD / I2C1_SCL / PWM1_CH4 / BPWM1_CH2 / ACMP0_WLAT / TM2 / INT1
51	PA.6 / EBI_AD6 / UART0_RXD / I2C1_SDA / PWM1_CH5 / BPWM1_CH3 / ACMP1_WLAT / TM3 / INT0
52	VSS
53	V_{DD}
54	PD.15 / PWM0_CH5 / TM3 / INT1
55	PA.5 / QSPI0_MISO1 / UART0_nCTS / UART0_TXD / I2C0_SCL / UART5_TXD / BPWM0_CH5 / PWM0_CH0
56	PA.4 / QSPI0_MOSI1 / SPI0_I2SMCLK / UART0_nRTS / UART0_RXD / I2C0_SDA / UART5_RXD / BPWM0_CH4 / PWM0_CH1
57	PA.3 / QSPI0_SS / SPI0_SS / UART4_TXD / I2C0_SMBAL / UART1_TXD / I2C1_SCL / BPWM0_CH3 / PWM0_CH2 / CLKO / PWM1_BRAKE1
58	PA.2 / QSPI0_CLK / SPI0_CLK / UART4_RXD / I2C0_SMBSUS / UART1_RXD / I2C1_SDA / BPWM0_CH2 / PWM0_CH3
59	PA.1 / QSPI0_MISO0 / SPI0_MISO / UART0_TXD / UART1_nCTS / BPWM0_CH1 / PWM0_CH4
60	PA.0 / QSPI0_MOSI0 / SPI0_MOSI / UART0_RXD / UART1_nRTS / BPWM0_CH0 / PWM0_CH5
61	PF.15 / PWM0_BRAKE0 / PWM0_CH1 / TM2 / CLKO / INT4
62	PE.14 / EBI_AD8 / UART2_TXD
63	PE.15 / EBI_AD9 / UART2_RXD
64	nRESET
65	PF.0 / UART1_TXD / I2C1_SCL / UART0_TXD / BPWM1_CH0 / ICE_DAT
66	PF.1 / UART1_RXD / I2C1_SDA / UART0_RXD / BPWM1_CH1 / ICE_CLK
67	PD.9 / EBI_AD7 / UART2_nCTS
68	PD.8 / EBI_AD6 / UART2_nRTS
69	PC.5 / EBI_AD5 / QSPI0_MISO1 / UART2_TXD / I2C1_SCL / UART4_TXD / PWM1_CH0
70	PC.4 / EBI_AD4 / QSPI0_MOSI1 / UART2_RXD / I2C1_SDA / UART4_RXD / PWM1_CH1

Pin	M032KG8AE Pin Function
71	PC.3 / EBI_AD3 / QSPI0_SS / UART2_nRTS / I2C0_SMBAL / UART3_TXD / PWM1_CH2
72	PC.2 / EBI_AD2 / QSPI0_CLK / UART2_nCTS / I2C0_SMBSUS / UART3_RXD / PWM1_CH3
73	PC.1 / EBI_AD1 / QSPI0_MISO0 / UART2_TXD / I2C0_SCL / PWM1_CH4 / ACMP0_O / ADC0_ST
74	PC.0 / EBI_AD0 / QSPI0_MOSI0 / UART2_RXD / I2C0_SDA / PWM1_CH5 / ACMP1_O
75	VSS
76	V_{DD}
77	PG.9 / EBI_AD0 / BPWM0_CH5
78	PG.10 / EBI_AD1 / BPWM0_CH4
79	PG.11 / EBI_AD2 / BPWM0_CH3
80	PG.12 / EBI_AD3 / BPWM0_CH2
81	PG.13 / EBI_AD4 / BPWM0_CH1
82	PG.14 / EBI_AD5 / BPWM0_CH0
83	PG.15 / CLKO / ADC0_ST
84	PD.7 / UART1_TXD / I2C0_SCL / USCI1_CLK
85	PD.6 / UART1_RXD / I2C0_SDA / USCI1_DAT1
86	PD.5 / I2C1_SCL / USCI1_DAT0
87	PD.4 / USCI0_CTL0 / I2C1_SDA / USCI1_CTL1
88	PD.3 / EBI_AD10 / USCI0_CTL1 / SPI0_SS / UART3_nRTS / USCI1_CTL0 / UART0_TXD
89	PD.2 / EBI_AD11 / USCI0_DAT1 / SPI0_CLK / UART3_nCTS / UART0_RXD
90	PD.1 / EBI_AD12 / USCI0_DAT0 / SPI0_MISO / UART3_TXD
91	PD.0 / EBI_AD13 / USCI0_CLK / SPI0_MOSI / UART3_RXD / TM2
92	PD.13 / EBI_AD10 / SPI0_I2SMCLK
93	USB_VBUS
94	USB_D-
95	USB_D+
96	USB_V_{DD}33_CAP
97	PE.7 / UART5_TXD / PWM0_CH0 / BPWM0_CH5
98	PE.6 / USCI0_CTL0 / UART5_RXD / PWM0_CH1 / BPWM0_CH4
99	PE.5 / EBI_nRD / USCI0_CTL1 / PWM0_CH2 / BPWM0_CH3
100	PE.4 / EBI_nWR / USCI0_DAT1 / PWM0_CH3 / BPWM0_CH2
101	PE.3 / EBI_MCLK / USCI0_DAT0 / PWM0_CH4 / BPWM0_CH1
102	PE.2 / EBI_ALE / USCI0_CLK / PWM0_CH5 / BPWM0_CH0
103	VSS
104	V_{DD}

Pin	M032KG8AE Pin Function
105	PE.1 / EBI_AD10 / QSPI0_MISO0 / UART3_TXD / I2C1_SCL / UART4_nCTS
106	PE.0 / EBI_AD11 / QSPI0_MOSI0 / UART3_RXD / I2C1_SDA / UART4_nRTS
107	PH.8 / EBI_AD12 / QSPI0_CLK / UART3_nRTS / UART1_TXD
108	PH.9 / EBI_AD13 / QSPI0_SS / UART3_nCTS / UART1_RXD
109	PH.10 / EBI_AD14 / QSPI0_MISO1 / UART4_TXD / UART0_TXD
110	PH.11 / EBI_AD15 / QSPI0_MOSI1 / UART4_RXD / UART0_RXD / PWM0_CH5
111	PD.14 / EBI_nCS0 / SPI0_I2SMCLK / USCI0_CTL0 / PWM0_CH4
112	VSS
113	LDO_CAP
114	V_{DD}
115	PC.14 / EBI_AD11 / SPI0_I2SMCLK / USCI0_CTL0 / QSPI0_CLK / TM1
116	PB.15 / ADC0_CH15 / EBI_AD12 / SPI0_SS / USCI0_CTL1 / UART0_nCTS / UART3_TXD / PWM1_CH0 / TM0_EXT / PWM0_BRAKE1
117	PB.14 / ADC0_CH14 / EBI_AD13 / SPI0_CLK / USCI0_DAT1 / UART0_nRTS / UART3_RXD / PWM1_CH1 / TM1_EXT / CLKO
118	PB.13 / ADC0_CH13 / ACMP0_P3 / ACMP1_P3 / EBI_AD14 / SPI0_MISO / USCI0_DAT0 / UART0_TXD / UART3_nRTS / PWM1_CH2 / TM2_EXT
119	PB.12 / ADC0_CH12 / ACMP0_P2 / ACMP1_P2 / EBI_AD15 / SPI0_MOSI / USCI0_CLK / UART0_RXD / UART3_nCTS / PWM1_CH3 / TM3_EXT
120	AV_{DD}
121	V_{REF}
122	AVSS
123	PB.11 / ADC0_CH11 / EBI_ADR16 / UART0_nCTS / UART4_TXD / I2C1_SCL / SPI0_I2SMCLK / BPWM1_CH0
124	PB.10 / ADC0_CH10 / EBI_ADR17 / USCI1_CTL0 / UART0_nRTS / UART4_RXD / I2C1_SDA / BPWM1_CH1
125	PB.9 / ADC0_CH9 / EBI_ADR18 / USCI1_CTL1 / UART0_TXD / UART1_nCTS / BPWM1_CH2
126	PB.8 / ADC0_CH8 / EBI_ADR19 / USCI1_CLK / UART0_RXD / UART1_nRTS / BPWM1_CH3
127	PB.7 / ADC0_CH7 / EBI_nWRL / USCI1_DAT0 / UART1_TXD / EBI_nCS0 / BPWM1_CH4 / PWM1_BRAKE0 / PWM1_CH4 / INT5 / ACMP0_O
128	PB.6 / ADC0_CH6 / EBI_nWRH / USCI1_DAT1 / UART1_RXD / EBI_nCS1 / BPWM1_CH5 / PWM1_BRAKE1 / PWM1_CH5 / INT4 / ACMP1_O

Table 4.1-37 M032KG8AE Multi-function Pin Table

M032KIAAE

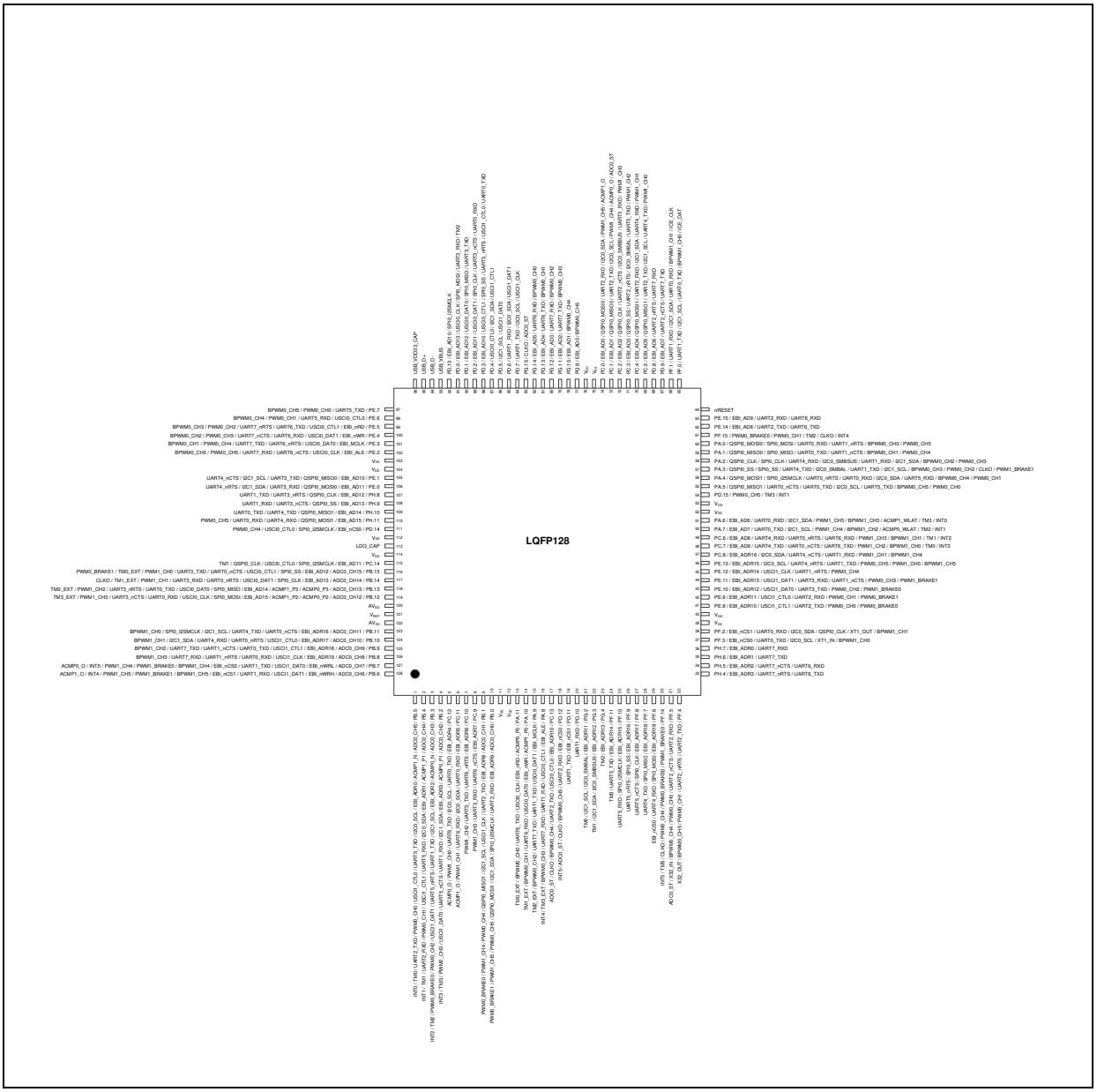

Figure 4.1-50 M032KIAAE Multi-function Pin Diagram

Pin	M032KIAAE Pin Function
1	PB.5 / ADC0_CH5 / ACMP1_N / EBI_ADR0 / I2C0_SCL / UART5_TXD / USCI1_CTL0 / PWM0_CH0 / UART2_TXD / TM0 / INT0
2	PB.4 / ADC0_CH4 / ACMP1_P1 / EBI_ADR1 / I2C0_SDA / UART5_RXD / USCI1_CTL1 / PWM0_CH1 / UART2_RXD / TM1 / INT1
3	PB.3 / ADC0_CH3 / ACMP0_N / EBI_ADR2 / I2C1_SCL / UART1_TXD / UART5_nRTS / USCI1_DAT1 / PWM0_CH2 / PWM0_BRAKE0 / TM2 / INT2
4	PB.2 / ADC0_CH2 / ACMP0_P1 / EBI_ADR3 / I2C1_SDA / UART1_RXD / UART5_nCTS / USCI1_DAT0 / PWM0_CH3 / TM3 / INT3

Pin	M032KIAAE Pin Function
5	PC.12 / EBI_ADR4 / UART0_TXD / I2C0_SCL / UART6_TXD / PWM1_CH0 / ACMP0_O
6	PC.11 / EBI_ADR5 / UART0_RXD / I2C0_SDA / UART6_RXD / PWM1_CH1 / ACMP1_O
7	PC.10 / EBI_ADR6 / UART6_nRTS / UART3_TXD / PWM1_CH2
8	PC.9 / EBI_ADR7 / UART6_nCTS / UART3_RXD / PWM1_CH3
9	PB.1 / ADC0_CH1 / EBI_ADR8 / UART2_TXD / USCI1_CLK / I2C1_SCL / QSPI0_MISO1 / PWM0_CH4 / PWM1_CH4 / PWM0_BRAKE0
10	PB.0 / ADC0_CH0 / EBI_ADR9 / UART2_RXD / SPI0_I2SMCLK / I2C1_SDA / QSPI0_MOSI1 / PWM0_CH5 / PWM1_CH5 / PWM0_BRAKE1
11	VSS
12	V_{DD}
13	PA.11 / ACMP0_P0 / EBI_nRD / USCI0_CLK / UART6_TXD / BPWM0_CH0 / TM0_EXT
14	PA.10 / ACMP1_P0 / EBI_nWR / USCI0_DAT0 / UART6_RXD / BPWM0_CH1 / TM1_EXT
15	PA.9 / EBI_MCLK / USCI0_DAT1 / UART1_TXD / UART7_TXD / BPWM0_CH2 / TM2_EXT
16	PA.8 / EBI_ALE / USCI0_CTL1 / UART1_RXD / UART7_RXD / BPWM0_CH3 / TM3_EXT / INT4
17	PC.13 / EBI_ADR10 / USCI0_CTL0 / UART2_TXD / BPWM0_CH4 / CLKO / ADC0_ST
18	PD.12 / EBI_nCS0 / UART2_RXD / BPWM0_CH5 / CLKO / ADC0_ST / INT5
19	PD.11 / EBI_nCS1 / UART1_TXD
20	PD.10 / UART1_RXD
21	PG.2 / EBI_ADR11 / I2C0_SMBAL / I2C1_SCL / TM0
22	PG.3 / EBI_ADR12 / I2C0_SMBSUS / I2C1_SDA / TM1
23	PG.4 / EBI_ADR13 / TM2
24	PF.11 / EBI_ADR14 / UART5_TXD / TM3
25	PF.10 / EBI_ADR15 / SPI0_I2SMCLK / UART5_RXD
26	PF.9 / EBI_ADR16 / SPI0_SS / UART5_nRTS
27	PF.8 / EBI_ADR17 / SPI0_CLK / UART5_nCTS
28	PF.7 / EBI_ADR18 / SPI0_MISO / UART4_TXD
29	PF.6 / EBI_ADR19 / SPI0_MOSI / UART4_RXD / EBI_nCS0
30	PF.14 / PWM1_BRAKE0 / PWM0_BRAKE0 / PWM0_CH4 / CLKO / TM3 / INT5
31	PF.5 / UART2_RXD / UART2_nCTS / PWM0_CH0 / BPWM0_CH4 / X32_IN / ADC0_ST
32	PF.4 / UART2_TXD / UART2_nRTS / PWM0_CH1 / BPWM0_CH5 / X32_OUT
33	PH.4 / EBI_ADR3 / UART7_nRTS / UART6_TXD
34	PH.5 / EBI_ADR2 / UART7_nCTS / UART6_RXD
35	PH.6 / EBI_ADR1 / UART7_TXD
36	PH.7 / EBI_ADR0 / UART7_RXD
37	PF.3 / EBI_nCS0 / UART0_TXD / I2C0_SCL / XT1_IN / BPWM1_CH0

Pin	M032KIAAE Pin Function
38	PF.2 / EBI_nCS1 / UART0_RXD / I2C0_SDA / QSPI0_CLK / XT1_OUT / BPWM1_CH1
39	VSS
40	V_{DD}
41	PE.8 / EBI_ADR10 / USCI1_CTL1 / UART2_TXD / PWM0_CH0 / PWM0_BRAKE0
42	PE.9 / EBI_ADR11 / USCI1_CTL0 / UART2_RXD / PWM0_CH1 / PWM0_BRAKE1
43	PE.10 / EBI_ADR12 / USCI1_DAT0 / UART3_TXD / PWM0_CH2 / PWM1_BRAKE0
44	PE.11 / EBI_ADR13 / USCI1_DAT1 / UART3_RXD / UART1_nCTS / PWM0_CH3 / PWM1_BRAKE1
45	PE.12 / EBI_ADR14 / USCI1_CLK / UART1_nRTS / PWM0_CH4
46	PE.13 / EBI_ADR15 / I2C0_SCL / UART4_nRTS / UART1_TXD / PWM0_CH5 / PWM1_CH0 / BPWM1_CH5
47	PC.8 / EBI_ADR16 / I2C0_SDA / UART4_nCTS / UART1_RXD / PWM1_CH1 / BPWM1_CH4
48	PC.7 / EBI_AD9 / UART4_TXD / UART0_nCTS / UART6_TXD / PWM1_CH2 / BPWM1_CH0 / TM0 / INT3
49	PC.6 / EBI_AD8 / UART4_RXD / UART0_nRTS / UART6_RXD / PWM1_CH3 / BPWM1_CH1 / TM1 / INT2
50	PA.7 / EBI_AD7 / UART0_TXD / I2C1_SCL / PWM1_CH4 / BPWM1_CH2 / ACMP0_WLAT / TM2 / INT1
51	PA.6 / EBI_AD6 / UART0_RXD / I2C1_SDA / PWM1_CH5 / BPWM1_CH3 / ACMP1_WLAT / TM3 / INT0
52	VSS
53	V_{DD}
54	PD.15 / PWM0_CH5 / TM3 / INT1
55	PA.5 / QSPI0_MISO1 / UART0_nCTS / UART0_TXD / I2C0_SCL / UART5_TXD / BPWM0_CH5 / PWM0_CH0
56	PA.4 / QSPI0_MOSI1 / SPI0_I2SMCLK / UART0_nRTS / UART0_RXD / I2C0_SDA / UART5_RXD / BPWM0_CH4 / PWM0_CH1
57	PA.3 / QSPI0_SS / SPI0_SS / UART4_TXD / I2C0_SMBAL / UART1_TXD / I2C1_SCL / BPWM0_CH3 / PWM0_CH2 / CLKO / PWM1_BRAKE1
58	PA.2 / QSPI0_CLK / SPI0_CLK / UART4_RXD / I2C0_SMBSUS / UART1_RXD / I2C1_SDA / BPWM0_CH2 / PWM0_CH3
59	PA.1 / QSPI0_MISO0 / SPI0_MISO / UART0_TXD / UART1_nCTS / BPWM0_CH1 / PWM0_CH4
60	PA.0 / QSPI0_MOSI0 / SPI0_MOSI / UART0_RXD / UART1_nRTS / BPWM0_CH0 / PWM0_CH5
61	PF.15 / PWM0_BRAKE0 / PWM0_CH1 / TM2 / CLKO / INT4
62	PE.14 / EBI_AD8 / UART2_TXD / UART6_TXD
63	PE.15 / EBI_AD9 / UART2_RXD / UART6_RXD
64	nRESET
65	PF.0 / UART1_TXD / I2C1_SCL / UART0_TXD / BPWM1_CH0 / ICE_DAT
66	PF.1 / UART1_RXD / I2C1_SDA / UART0_RXD / BPWM1_CH1 / ICE_CLK
67	PD.9 / EBI_AD7 / UART2_nCTS / UART7_TXD
68	PD.8 / EBI_AD6 / UART2_nRTS / UART7_RXD
69	PC.5 / EBI_AD5 / QSPI0_MISO1 / UART2_TXD / I2C1_SCL / UART4_TXD / PWM1_CH0
70	PC.4 / EBI_AD4 / QSPI0_MOSI1 / UART2_RXD / I2C1_SDA / UART4_RXD / PWM1_CH1

Pin	M032KIAAE Pin Function
71	PC.3 / EBI_AD3 / QSPI0_SS / UART2_nRTS / I2C0_SMBAL / UART3_TXD / PWM1_CH2
72	PC.2 / EBI_AD2 / QSPI0_CLK / UART2_nCTS / I2C0_SMBSUS / UART3_RXD / PWM1_CH3
73	PC.1 / EBI_AD1 / QSPI0_MISO0 / UART2_TXD / I2C0_SCL / PWM1_CH4 / ACMP0_O / ADC0_ST
74	PC.0 / EBI_AD0 / QSPI0_MOSI0 / UART2_RXD / I2C0_SDA / PWM1_CH5 / ACMP1_O
75	VSS
76	V_{DD}
77	PG.9 / EBI_AD0 / BPWM0_CH5
78	PG.10 / EBI_AD1 / BPWM0_CH4
79	PG.11 / EBI_AD2 / UART7_TXD / BPWM0_CH3
80	PG.12 / EBI_AD3 / UART7_RXD / BPWM0_CH2
81	PG.13 / EBI_AD4 / UART6_TXD / BPWM0_CH1
82	PG.14 / EBI_AD5 / UART6_RXD / BPWM0_CH0
83	PG.15 / CLKO / ADC0_ST
84	PD.7 / UART1_TXD / I2C0_SCL / USCI1_CLK
85	PD.6 / UART1_RXD / I2C0_SDA / USCI1_DAT1
86	PD.5 / I2C1_SCL / USCI1_DAT0
87	PD.4 / USCI0_CTL0 / I2C1_SDA / USCI1_CTL1
88	PD.3 / EBI_AD10 / USCI0_CTL1 / SPI0_SS / UART3_nRTS / USCI1_CTL0 / UART0_TXD
89	PD.2 / EBI_AD11 / USCI0_DAT1 / SPI0_CLK / UART3_nCTS / UART0_RXD
90	PD.1 / EBI_AD12 / USCI0_DAT0 / SPI0_MISO / UART3_TXD
91	PD.0 / EBI_AD13 / USCI0_CLK / SPI0_MOSI / UART3_RXD / TM2
92	PD.13 / EBI_AD10 / SPI0_I2SMCLK
93	USB_VBUS
94	USB_D-
95	USB_D+
96	USB_V_{DD}33_CAP
97	PE.7 / UART5_TXD / PWM0_CH0 / BPWM0_CH5
98	PE.6 / USCI0_CTL0 / UART5_RXD / PWM0_CH1 / BPWM0_CH4
99	PE.5 / EBI_nRD / USCI0_CTL1 / UART6_TXD / UART7_nRTS / PWM0_CH2 / BPWM0_CH3
100	PE.4 / EBI_nWR / USCI0_DAT1 / UART6_RXD / UART7_nCTS / PWM0_CH3 / BPWM0_CH2
101	PE.3 / EBI_MCLK / USCI0_DAT0 / UART6_nRTS / UART7_TXD / PWM0_CH4 / BPWM0_CH1
102	PE.2 / EBI_ALE / USCI0_CLK / UART6_nCTS / UART7_RXD / PWM0_CH5 / BPWM0_CH0
103	VSS
104	V_{DD}

Pin	M032KIAAE Pin Function
105	PE.1 / EBI_AD10 / QSPI0_MISO0 / UART3_TXD / I2C1_SCL / UART4_nCTS
106	PE.0 / EBI_AD11 / QSPI0_MOSI0 / UART3_RXD / I2C1_SDA / UART4_nRTS
107	PH.8 / EBI_AD12 / QSPI0_CLK / UART3_nRTS / UART1_TXD
108	PH.9 / EBI_AD13 / QSPI0_SS / UART3_nCTS / UART1_RXD
109	PH.10 / EBI_AD14 / QSPI0_MISO1 / UART4_TXD / UART0_TXD
110	PH.11 / EBI_AD15 / QSPI0_MOSI1 / UART4_RXD / UART0_RXD / PWM0_CH5
111	PD.14 / EBI_nCS0 / SPI0_I2SMCLK / USCI0_CTL0 / PWM0_CH4
112	VSS
113	LDO_CAP
114	V_{DD}
115	PC.14 / EBI_AD11 / SPI0_I2SMCLK / USCI0_CTL0 / QSPI0_CLK / TM1
116	PB.15 / ADC0_CH15 / EBI_AD12 / SPI0_SS / USCI0_CTL1 / UART0_nCTS / UART3_TXD / PWM1_CH0 / TM0_EXT / PWM0_BRAKE1
117	PB.14 / ADC0_CH14 / EBI_AD13 / SPI0_CLK / USCI0_DAT1 / UART0_nRTS / UART3_RXD / PWM1_CH1 / TM1_EXT / CLKO
118	PB.13 / ADC0_CH13 / ACMP0_P3 / ACMP1_P3 / EBI_AD14 / SPI0_MISO / USCI0_DAT0 / UART0_TXD / UART3_nRTS / PWM1_CH2 / TM2_EXT
119	PB.12 / ADC0_CH12 / ACMP0_P2 / ACMP1_P2 / EBI_AD15 / SPI0_MOSI / USCI0_CLK / UART0_RXD / UART3_nCTS / PWM1_CH3 / TM3_EXT
120	AV_{DD}
121	V_{REF}
122	AVSS
123	PB.11 / ADC0_CH11 / EBI_ADR16 / UART0_nCTS / UART4_TXD / I2C1_SCL / SPI0_I2SMCLK / BPWM1_CH0
124	PB.10 / ADC0_CH10 / EBI_ADR17 / USCI1_CTL0 / UART0_nRTS / UART4_RXD / I2C1_SDA / BPWM1_CH1
125	PB.9 / ADC0_CH9 / EBI_ADR18 / USCI1_CTL1 / UART0_TXD / UART1_nCTS / UART7_TXD / BPWM1_CH2
126	PB.8 / ADC0_CH8 / EBI_ADR19 / USCI1_CLK / UART0_RXD / UART1_nRTS / UART7_RXD / BPWM1_CH3
127	PB.7 / ADC0_CH7 / EBI_nWRL / USCI1_DAT0 / UART1_TXD / EBI_nCS0 / BPWM1_CH4 / PWM1_BRAKE0 / PWM1_CH4 / INT5 / ACMP0_O
128	PB.6 / ADC0_CH6 / EBI_nWRH / USCI1_DAT1 / UART1_RXD / EBI_nCS1 / BPWM1_CH5 / PWM1_BRAKE1 / PWM1_CH5 / INT4 / ACMP1_O

Table 4.1-38 M032KIAAE Multi-function Pin Table

4.2 Pin Mapping

Different part number with the same package might have different function. Please refer to the selection guide in section 3.2, Pin Configuration in section 4.1 or NuTool - PinConfig.

Corresponding Part Number: M031xB, M031xC, M031xD, M031xE, M031xG, M031xI, M032xC, M032xD, M032xE, M032xG, M032xI series.

	M031 Series						M032 Series					
Pin Name	**20 Pin**	**28 Pin**	**32 Pin**	**48 Pin**	**64 Pin**	**128 Pin**	**20 Pin**	**28 Pin**	**32 Pin**	**48 Pin**	**64 Pin**	**128 Pin**
PB.5	8	12	1	1	2	1		12	1	1	2	1
PB.4	9	13	2	2	3	2		13	2	2	3	2
PB.3	10	14	3	3	4	3		14	3	3	4	3
PB.2	11	15	4	4	5	4		15	4	4	5	4
PC.12						5						5
PC.11						6						6
PC.10						7						7
PC.9						8						8
PB.1		16	5	5	6	9		16	5	5	6	9
PB.0		17	6	6	7	10		17	6	6	7	10
V_{SS}						11						11
V_{DD}						12						12
PA.11				7	8	13				7	8	13
PA.10				8	9	14				8	9	14
PA.9				9	10	15				9	10	15
PA.8				10	11	16				10	11	16
PC.13						17						17
PD.12						18						18
PD.11						19						19
PD.10						20						20
PG.2						21						21
PG.3						22						22
PG.4						23						23
PF.11						24						24
PF.10						25						25
PF.9						26						26
PF.8						27						27
PF.7						28						28
PF.6					12	29					12	29

	M031 Series						M032 Series					
Pin Name	**20 Pin**	**28 Pin**	**32 Pin**	**48 Pin**	**64 Pin**	**128 Pin**	**20 Pin**	**28 Pin**	**32 Pin**	**48 Pin**	**64 Pin**	**128 Pin**
PF.14					13	30					13	30
PF.5			7	11	14	31			7	11	14	31
PF.4			8	12	15	32			8	12	15	32
PH.4						33						33
PH.5						34						34
PH.6						35						35
PH.7						36						36
PF.3	12	18	9	13	16	37	11	18	9	13	16	37
PF.2	13	19	10	14	17	38	12	19	10	14	17	38
V_{SS}						39						39
V_{DD}						40						40
PE.8						41						41
PE.9						42						42
PE.10						43						43
PE.11						44						44
PE.12						45						45
PE.13						46						46
PC.8						47						47
PC.7					18	48					18	48
PC.6					19	49					19	49
PA.7				15	20	50				15	20	50
PA.6				16	21	51				16	21	51
V_{SS}					22	52					22	52
V_{DD}					23	53					23	53
PD.15					24	54					24	54
PA.5				17	25	55				17	25	55
PA.4				18	26	56				18	26	56
PA.3	14	20	11	19	27	57	13	20	11	19	27	57
PA.2	15	21	12	20	28	58	14	21	12	20	28	58
PA.1	16	22	13	21	29	59	15	22	13	21	29	59
PA.0	17	23	14	22	30	60	16	23	14	22	30	60
PF.15			15	23	31	61			15	23	31	61
PE.14						62						62
PE.15						63						63

	M031 Series						M032 Series					
Pin Name	**20 Pin**	**28 Pin**	**32 Pin**	**48 Pin**	**64 Pin**	**128 Pin**	**20 Pin**	**28 Pin**	**32 Pin**	**48 Pin**	**64 Pin**	**128 Pin**
nRESET	18	24	16	24	32	64	17	24	16	24	32	64
PF.0	19	25	17	25	33	65	18	25	17	25	33	65
ICE_DAT												
PF.1	20	26	18	26	34	66	19	26	18	26	34	66
ICE_CLK												
PD.9						67						67
PD.8						68						68
PC.5				27	35	69				27	35	69
PC.4				28	36	70				28	36	70
PC.3				29	37	71				29	37	71
PC.2				30	38	72				30	38	72
PC.1		27	19	31	39	73		27	19	31	39	73
PC.0		28	20	32	40	74		28	20	32	40	74
V_{SS}						75						75
V_{DD}						76						76
PG.9						77						77
PG.10						78						78
PG.11						79						79
PG.12						80						80
PG.13						81						81
PG.14						82						82
PG.15						83						83
PD.7						84						84
PD.6						85						85
PD.5						86						86
PD.4						87						87
PD.3					41	88					41	88
PD.2					42	89					42	89
PD.1					43	90					43	90
PD.0					44	91					44	91
PD.13						92						92
NC												
NC												
NC												

	M031 Series						M032 Series					
Pin Name	**20 Pin**	**28 Pin**	**32 Pin**	**48 Pin**	**64 Pin**	**128 Pin**	**20 Pin**	**28 Pin**	**32 Pin**	**48 Pin**	**64 Pin**	**128 Pin**
NC												
PA.12		1	21	33	45	93						
PA.13		2	22	34	46	94						
PA.14		3	23	35	47	95						
PA.15		4	24	36	48	96						
USB_VBUS							20	1	21	33	45	93
USB_D-							1	2	22	34	46	94
USB_D+							2	3	23	35	47	95
USB_V_{DD}33_CAP							3	4	24	36	48	96
PE.7						97						97
PE.6						98						98
PE.5						99						99
PE.4						100						100
PE.3						101						101
PE.2						102						102
V_{SS}						103						103
V_{DD}						104						104
PE.1						105						105
PE.0						106						106
PH.8						107						107
PH.9						108						108
PH.10						109						109
PH.11						110						110
PD.14						111						111
V_{SS}	1	5	25	37	49	112	4	5	25	37	49	112
LDO_CAP	2	6	26	38	50	113	5	6	26	38	50	113
V_{DD}	3	7	27	39	51	114	6	7	27	39	51	114
PC.14				40	52	115				40	52	115
PB.15			28	41	53	116			28	41	53	116
PB.14	4	8	29	42	54	117	7	8	29	42	54	117
PB.13	5	9	30	43	55	118	8	9	30	43	55	118
PB.12	6	10	31	44	56	119	9	10	31	44	56	119
AV_{DD}	7	11	32	45	57	120	10	11	32	45	57	120
V_{REF}					58	121					58	121

	M031 Series						M032 Series					
Pin Name	**20 Pin**	**28 Pin**	**32 Pin**	**48 Pin**	**64 Pin**	**128 Pin**	**20 Pin**	**28 Pin**	**32 Pin**	**48 Pin**	**64 Pin**	**128 Pin**
AV_{SS}				46	59	122				46	59	122
PB.11					60	123					60	123
PB.10					61	124					61	124
PB.9					62	125					62	125
PB.8					63	126					63	126
PB.7				47	64	127				47	64	127
PB.6				48	1	128				48	1	128

4.3 Pin Function Description

Group	Pin Name	Type	Description
ACMP0	ACMP0_N	A	Analog comparator 0 negative input pin.
	ACMP0_O	O	Analog comparator 0 output pin.
	ACMP0_P0	A	Analog comparator 0 positive input 0 pin.
	ACMP0_P1	A	Analog comparator 0 positive input 1 pin.
	ACMP0_P2	A	Analog comparator 0 positive input 2 pin.
	ACMP0_P3	A	Analog comparator 0 positive input 3 pin.
	ACMP0_WLAT	I	Analog comparator 0 window latch input pin
ACMP1	ACMP1_N	A	Analog comparator 1 negative input pin.
	ACMP1_O	O	Analog comparator 1 output pin.
	ACMP1_P0	A	Analog comparator 1 positive input 0 pin.
	ACMP1_P1	A	Analog comparator 1 positive input 1 pin.
	ACMP1_P2	A	Analog comparator 1 positive input 2 pin.
	ACMP1_P3	A	Analog comparator 1 positive input 3 pin.
	ACMP1_WLAT	I	Analog comparator 1 window latch input pin
ADC0	ADC0_CH0	A	ADC0 channel 0 analog input.
	ADC0_CH1	A	ADC0 channel 1 analog input.
	ADC0_CH2	A	ADC0 channel 2 analog input.
	ADC0_CH3	A	ADC0 channel 3 analog input.
	ADC0_CH4	A	ADC0 channel 4 analog input.
	ADC0_CH5	A	ADC0 channel 5 analog input.
	ADC0_CH6	A	ADC0 channel 6 analog input.
	ADC0_CH7	A	ADC0 channel 7 analog input.
	ADC0_CH8	A	ADC0 channel 8 analog input.
	ADC0_CH9	A	ADC0 channel 9 analog input.
	ADC0_CH10	A	ADC0 channel 10 analog input.
	ADC0_CH11	A	ADC0 channel 11 analog input.
	ADC0_CH12	A	ADC0 channel 12 analog input.
	ADC0_CH13	A	ADC0 channel 13 analog input.
	ADC0_CH14	A	ADC0 channel 14 analog input.
	ADC0_CH15	A	ADC0 channel 15 analog input.
	ADC0_ST	I	ADC0 external trigger input pin.
BPWM0	BPWM0_CH0	I/O	BPWM0 channel 0 output/capture input.
	BPWM0_CH1	I/O	BPWM0 channel 1 output/capture input.
	BPWM0_CH2	I/O	BPWM0 channel 2 output/capture input.

Group	Pin Name	Type	Description
	BPWM0_CH3	I/O	BPWM0 channel 3 output/capture input.
	BPWM0_CH4	I/O	BPWM0 channel 4 output/capture input.
	BPWM0_CH5	I/O	BPWM0 channel 5 output/capture input.
BPWM1	BPWM1_CH0	I/O	BPWM1 channel 0 output/capture input.
	BPWM1_CH1	I/O	BPWM1 channel 1 output/capture input.
	BPWM1_CH2	I/O	BPWM1 channel 2 output/capture input.
	BPWM1_CH3	I/O	BPWM1 channel 3 output/capture input.
	BPWM1_CH4	I/O	BPWM1 channel 4 output/capture input.
	BPWM1_CH5	I/O	BPWM1 channel 5 output/capture input.
CLKO	CLKO	O	Clock Out
EBI	EBI_AD0	I/O	EBI address/data bus bit 0.
	EBI_AD1	I/O	EBI address/data bus bit 1.
	EBI_AD2	I/O	EBI address/data bus bit 2.
	EBI_AD3	I/O	EBI address/data bus bit 3.
	EBI_AD4	I/O	EBI address/data bus bit 4.
	EBI_AD5	I/O	EBI address/data bus bit 5.
	EBI_AD6	I/O	EBI address/data bus bit 6.
	EBI_AD7	I/O	EBI address/data bus bit 7.
	EBI_AD8	I/O	EBI address/data bus bit 8.
	EBI_AD9	I/O	EBI address/data bus bit 9.
	EBI_AD10	I/O	EBI address/data bus bit 10.
	EBI_AD11	I/O	EBI address/data bus bit 11.
	EBI_AD12	I/O	EBI address/data bus bit 12.
	EBI_AD13	I/O	EBI address/data bus bit 13.
	EBI_AD14	I/O	EBI address/data bus bit 14.
	EBI_AD15	I/O	EBI address/data bus bit 15.
	EBI_ADR0	O	EBI address bus bit 0.
	EBI_ADR1	O	EBI address bus bit 1.
	EBI_ADR2	O	EBI address bus bit 2.
	EBI_ADR3	O	EBI address bus bit 3.
	EBI_ADR4	O	EBI address bus bit 4.
	EBI_ADR5	O	EBI address bus bit 5.
	EBI_ADR6	O	EBI address bus bit 6.
	EBI_ADR7	O	EBI address bus bit 7.
	EBI_ADR8	O	EBI address bus bit 8.
	EBI_ADR9	O	EBI address bus bit 9.

Group	Pin Name	Type	Description
	EBI_ADR10	O	EBI address bus bit 10.
	EBI_ADR11	O	EBI address bus bit 11.
	EBI_ADR12	O	EBI address bus bit 12.
	EBI_ADR13	O	EBI address bus bit 13.
	EBI_ADR14	O	EBI address bus bit 14.
	EBI_ADR15	O	EBI address bus bit 15.
	EBI_ADR16	O	EBI address bus bit 16.
	EBI_ADR17	O	EBI address bus bit 17.
	EBI_ADR18	O	EBI address bus bit 18.
	EBI_ADR19	O	EBI address bus bit 19.
	EBI_ALE	O	EBI address latch enable output pin.
	EBI_MCLK	O	EBI external clock output pin.
	EBI_nCS0	O	EBI chip select 0 output pin.
	EBI_nCS1	O	EBI chip select 1 output pin.
	EBI_nRD	O	EBI read enable output pin.
	EBI_nWR	O	EBI write enable output pin.
	EBI_nWRH	O	EBI high byte write enable output pin
	EBI_nWRL	O	EBI low byte write enable output pin.
GPIO	PA.x~PH.x	I/O	General purpose digital I/O pin.
I2C0	I2C0_SCL	I/O	I2C0 clock pin.
	I2C0_SDA	I/O	I2C0 data input/output pin.
	I2C0_SMBAL	O	I2C0 SMBus SMBALTER pin
	I2C0_SMBSUS	O	I2C0 SMBus SMBSUS pin (PMBus CONTROL pin)
I2C1	I2C1_SCL	I/O	I2C1 clock pin.
	I2C1_SDA	I/O	I2C1 data input/output pin.
ICE	ICE_CLK	I	Serial wired debugger clock pin **Note:** It is recommended to use 100 kΩ pull-up resistor on ICE_CLK pin
	ICE_DAT	I/O	Serial wired debugger data pin **Note:** It is recommended to use 100 kΩ pull-up resistor on ICE_DAT pin
	nRESET	I	External reset input: active LOW, with an internal pull-up. Set this pin low reset to initial state. **Note:** It is recommended to use 10 kΩ pull-up resistor and 10 uF capacitor on nRESET pin.
INT0	INT0	I	External interrupt 0 input pin.
INT1	INT1	I	External interrupt 1 input pin.
INT3	INT3	I	External interrupt 3 input pin.
INT4	INT4	I	External interrupt 4 input pin.
INT5	INT5	I	External interrupt 5 input pin.
PWM0	PWM0_BRAKE0	I	PWM0 Brake 0 input pin.

Group	Pin Name	Type	Description
	PWM0_BRAKE1	I	PWM0 Brake 1 input pin.
	PWM0_CH0	I/O	PWM0 channel 0 output/capture input.
	PWM0_CH1	I/O	PWM0 channel 1 output/capture input.
	PWM0_CH2	I/O	PWM0 channel 2 output/capture input.
	PWM0_CH3	I/O	PWM0 channel 3 output/capture input.
	PWM0_CH4	I/O	PWM0 channel 4 output/capture input.
	PWM0_CH5	I/O	PWM0 channel 5 output/capture input.
PWM1	PWM1_BRAKE0	I	PWM1 Brake 0 input pin.
	PWM1_BRAKE1	I	PWM1 Brake 1 input pin.
	PWM1_CH0	I/O	PWM1 channel 0 output/capture input.
	PWM1_CH1	I/O	PWM1 channel 1 output/capture input.
	PWM1_CH2	I/O	PWM1 channel 2 output/capture input.
	PWM1_CH3	I/O	PWM1 channel 3 output/capture input.
	PWM1_CH4	I/O	PWM1 channel 4 output/capture input.
	PWM1_CH5	I/O	PWM1 channel 5 output/capture input.
Power	V_{DD}	P	Power supply for I/O ports and LDO source for internal PLL and digital circuit.
	V_{SS}	P	Ground pin for digital circuit.
	AV_{DD}	P	Power supply for internal analog circuit.
	AV_{SS}	P	Ground pin for analog circuit.
	V_{REF}	A	ADC reference voltage input. **Note:** This pin needs to be connected with a 1uF capacitor.
	LDO_CAP	A	LDO output pin. **Note:** This pin needs to be connected with a 1uF capacitor.
QSPI0	QSPI0_CLK	I/O	Quad SPI0 serial clock pin.
	QSPI0_MISO0	I/O	Quad SPI0 MISO0 (Master In, Slave Out) pin.
	QSPI0_MISO1	I/O	Quad SPI0 MISO1 (Master In, Slave Out) pin.
	QSPI0_MOSI0	I/O	Quad SPI0 MOSI0 (Master Out, Slave In) pin.
	QSPI0_MOSI1	I/O	Quad SPI0 MOSI1 (Master Out, Slave In) pin.
	QSPI0_SS	I/O	Quad SPI0 slave select pin.
SPI0	SPI0_CLK	I/O	SPI0 serial clock pin.
	SPI0_I2SMCLK	I/O	SPI0 I^2S master clock output pin
	SPI0_MISO	I/O	SPI0 MISO (Master In, Slave Out) pin.
	SPI0_MOSI	I/O	SPI0 MOSI (Master Out, Slave In) pin.
	SPI0_SS	I/O	SPI0 slave select pin.
TM0	TM0	I/O	Timer0 event counter input/toggle output pin.
	TM0_EXT	I/O	Timer0 external capture input/toggle output pin.
TM1	TM1	I/O	Timer1 event counter input/toggle output pin.

Group	Pin Name	Type	Description
	TM1_EXT	I/O	Timer1 external capture input/toggle output pin.
TM2	TM2	I/O	Timer2 event counter input/toggle output pin.
	TM2_EXT	I/O	Timer2 external capture input/toggle output pin.
TM3	TM3	I/O	Timer3 event counter input/toggle output pin.
	TM3_EXT	I/O	Timer3 external capture input/toggle output pin.
UART0	UART0_RXD	I	UART0 data receiver input pin.
	UART0_TXD	O	UART0 data transmitter output pin.
	UART0_nCTS	I	UART0 clear to Send input pin.
	UART0_nRTS	O	UART0 request to Send output pin.
UART1	UART1_RXD	I	UART1 data receiver input pin.
	UART1_TXD	O	UART1 data transmitter output pin.
	UART1_nCTS	I	UART1 clear to Send input pin.
	UART1_nRTS	O	UART1 request to Send output pin.
UART2	UART2_RXD	I	UART2 data receiver input pin.
	UART2_TXD	O	UART2 data transmitter output pin.
	UART2_nCTS	I	UART2 clear to Send input pin.
	UART2_nRTS	O	UART2 request to Send output pin.
UART3	UART3_RXD	I	UART3 data receiver input pin.
	UART3_TXD	O	UART3 data transmitter output pin.
	UART3_nCTS	I	UART3 clear to Send input pin.
	UART3_nRTS	O	UART3 request to Send output pin.
UART4	UART4_RXD	I	UART4 data receiver input pin.
	UART4_TXD	O	UART4 data transmitter output pin.
	UART4_nCTS	I	UART4 clear to Send input pin.
	UART4_nRTS	O	UART4 request to Send output pin.
UART5	UART5_RXD	I	UART5 data receiver input pin.
	UART5_TXD	O	UART5 data transmitter output pin.
	UART5_nCTS	I	UART5 clear to Send input pin.
	UART5_nRTS	O	UART5 request to Send output pin.
UART6	UART6_RXD	I	UART6 data receiver input pin.
	UART6_TXD	O	UART6 data transmitter output pin.
	UART6_nCTS	I	UART6 clear to Send input pin.
	UART6_nRTS	O	UART6 request to Send output pin.
UART7	UART7_RXD	I	UART7 data receiver input pin.
	UART7_TXD	O	UART7 data transmitter output pin.
	UART7_nCTS	I	UART7 clear to Send input pin.

Group	Pin Name	Type	Description
	UART7_nRTS	O	UART7 request to Send output pin.
USB	USB_VBUS	P	Power supply from USB host or HUB.
	USB_D-	A	USB differential signal D-.
	USB_D+	A	USB differential signal D+.
	USB_V_{DD}33_CAP	A	Internal power regulator output 3.3V decoupling pin.
USCI0	USCI0_CLK	I/O	USCI0 clock pin.
	USCI0_CTL0	I/O	USCI0 control 0 pin.
	USCI0_CTL1	I/O	USCI0 control 1 pin.
	USCI0_DAT0	I/O	USCI0 data 0 pin.
	USCI0_DAT1	I/O	USCI0 data 1 pin.
USCI1	USCI1_CLK	I/O	USCI1 clock pin.
	USCI1_CTL0	I/O	USCI1 control 0 pin.
	USCI1_CTL1	I/O	USCI1 control 1 pin.
	USCI1_DAT0	I/O	USCI1 data 0 pin.
	USCI1_DAT1	I/O	USCI1 data 1 pin.
X32	X32_IN	I	External 32.768 kHz crystal input pin.
	X32_OUT	O	External 32.768 kHz crystal output pin.
XT1	XT1_IN	I	External 4~24 MHz (high speed) crystal input pin.
	XT1_OUT	O	External 4~24 MHz (high speed) crystal output pin.

5 BLOCK DIAGRAM

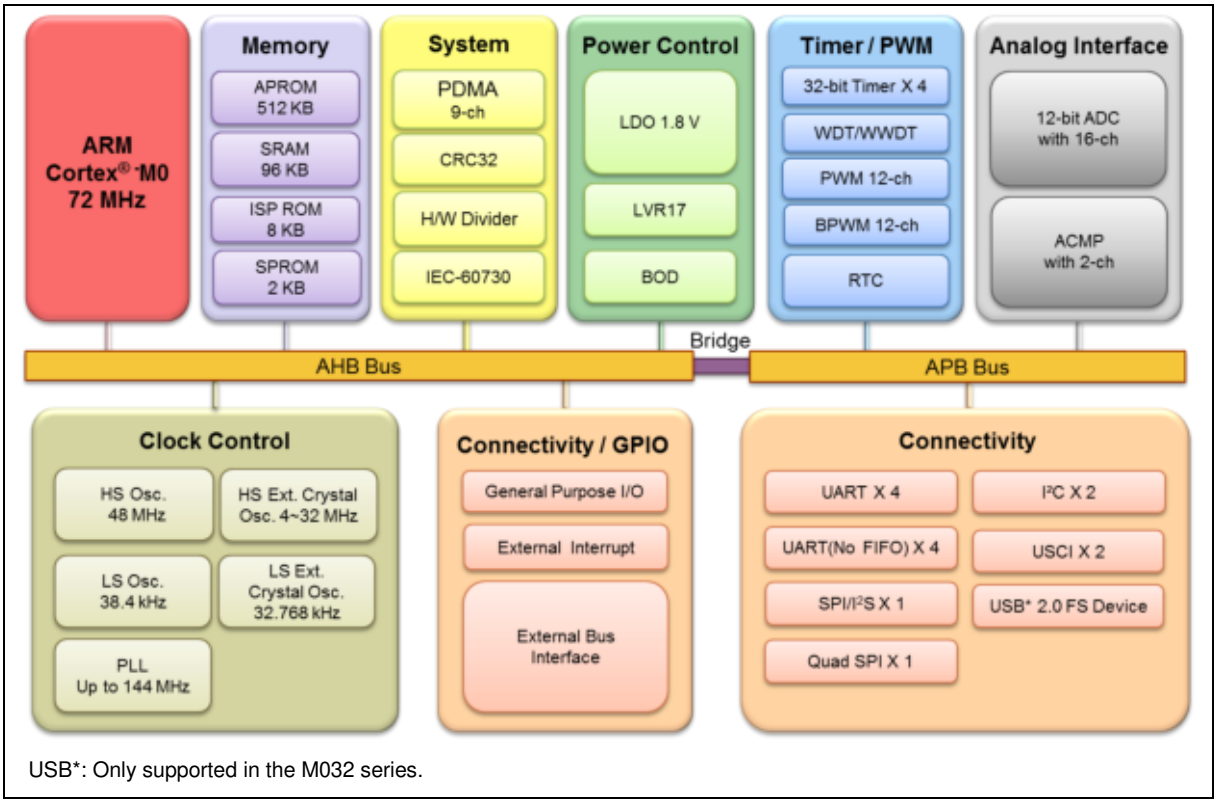

Figure 5-1 NuMicro® M031/M032 Block Diagram

6 FUNCTIONAL DESCRIPTION

6.1 Arm® Cortex®-M0 Core

The Cortex®-M0 processor is a configurable, multistage, 32-bit RISC processor, which has an AMBA AHB-Lite interface and includes an NVIC component. It also has optional hardware debug functionality. The processor can execute Thumb code and is compatible with other Cortex®-M profile processor. The profile supports two modes -Thread mode and Handler mode. Handler mode is entered as a result of an exception. An exception return can only be issued in Handler mode. Thread mode is entered on Reset, and can be entered as a result of an exception return. Figure 6-1 shows the functional controller of processor.

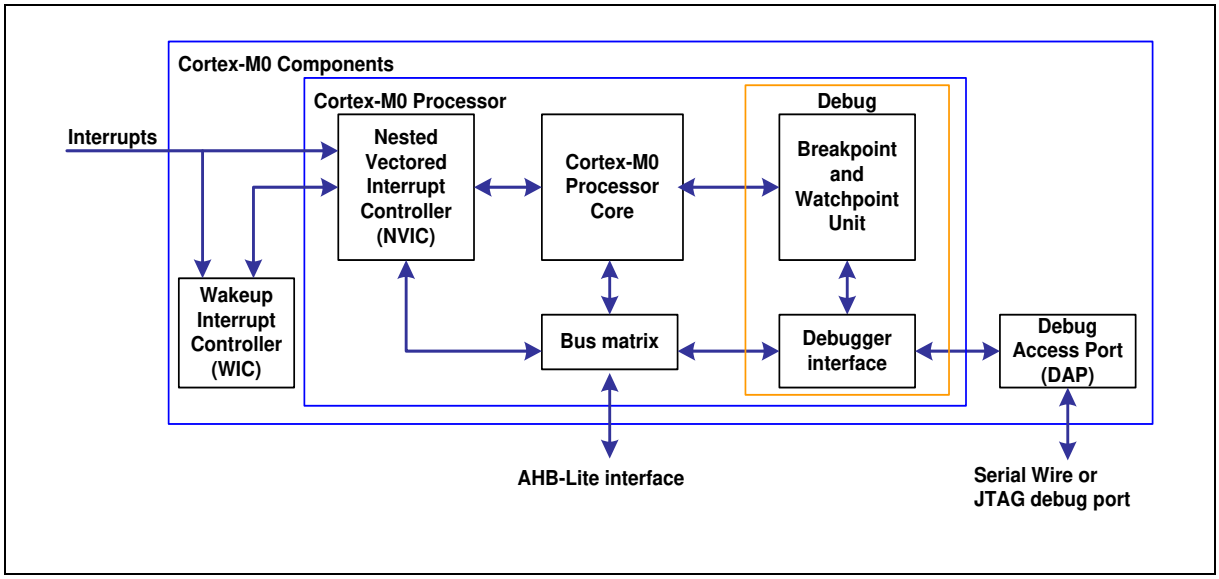

Figure 6-1 Functional Block Diagram

The implemented device provides:

- A low gate count processor:
  - Arm®6-M Thumb® instruction set
  - Thumb-2 technology
  - Arm®6-M compliant 24-bit SysTick timer
  - A 32-bit hardware multiplier
  - System interface supported with little-endian data accesses
  - Ability to have deterministic, fixed-latency, interrupt handling
  - Load/store-multiples and multicycle-multiplies that can be abandoned and restarted to facilitate rapid interrupt handling
  - C Application Binary Interface compliant exception model. This is the Armv6-M, C Application Binary Interface (C-ABI) compliant exception model that enables the use of pure C functions as interrupt handlers
  - Low Power Sleep mode entry using the Wait For Interrupt (WFI), Wait For Event (WFE) instructions, or return from interrupt sleep-on-exit feature
- NVIC:
  - 32 external interrupt inputs, each with four levels of priority

- Dedicated Non-maskable Interrupt (NMI) input
- Supports for both level-sensitive and pulse-sensitive interrupt lines
- Supports Wake-up Interrupt Controller (WIC) and, providing Ultra-low Power Sleep mode

- Debug support:
  - Four hardware breakpoints
  - Two watchpoints
  - Program Counter Sampling Register (PCSR) for non-intrusive code profiling
  - Single step and vector catch capabilities
- Bus interfaces:
  - Single 32-bit AMBA-3 AHB-Lite system interface that provides simple integration to all system peripherals and memory
  - Single 32-bit slave port that supports the DAP (Debug Access Port)

6.2 Clock Controller

6.2.1 Overview

The clock controller generates clocks for the whole chip, including system clocks and all peripheral clocks. The clock controller also implements the power control function with the individually clock ON/OFF control, clock source selection and a clock divider. The chip will not enter Power-down mode until CPU sets the Power-down enable bit PDEN(CLK_PWRCTL[7]) and Cortex®-M0 core executes the WFI instruction. After that, chip enters Power-down mode and wait for wake-up interrupt source triggered to leave Power-down mode. In Power-down mode, the clock controller turns off the 4~32 MHz external high speed crystal (HXT), 48 MHz internal high speed RC oscillator (HIRC) and Programmable PLL output clock frequency (PLLFOUT) to reduce the overall system power consumption.Figure 6.2-1 and Figure 6.2-2 shows the clock generator and the overview of the clock source control.

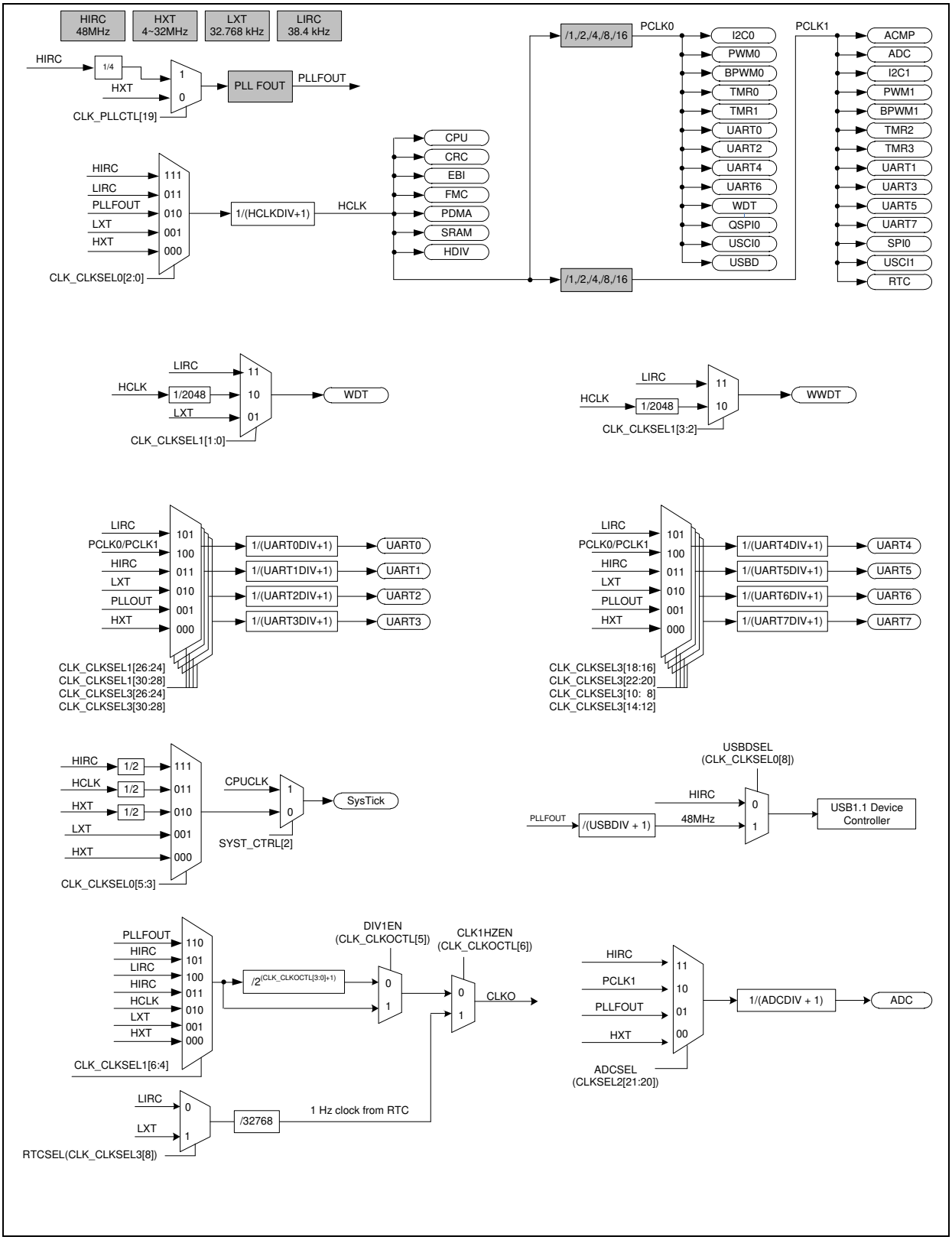

Figure 6.2-1 Clock Generator Global View Diagram (1/2)

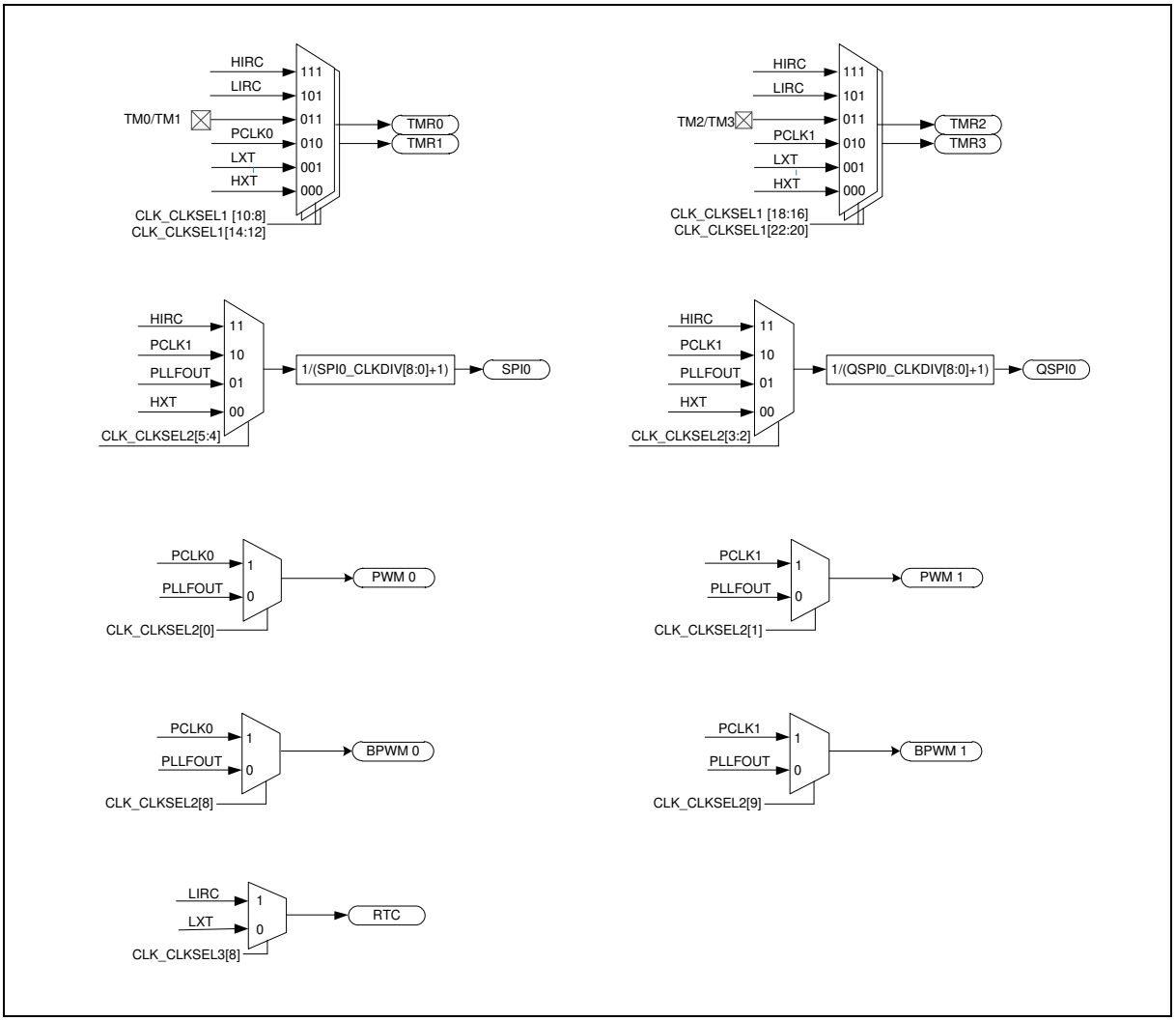

Figure 6.2-2 Clock Generator Global View Diagram (2/2)

6.2.2 Clock Generator

The clock generator consists of 6 clock sources, which are listed below:

- 32.768 kHz external low speed crystal oscillator (LXT)
- 4~32 MHz external high speed crystal oscillator (HXT)
- Programmable PLL output clock frequency (PLLFOUT), PLL source can be selected from external 4~32 MHz external high speed crystal (HXT) or 48 MHz internal high speed oscillator (HIRC/4)
- 48 MHz internal high speed RC oscillator (HIRC)
- 38.4 kHz internal low speed RC oscillator (LIRC)

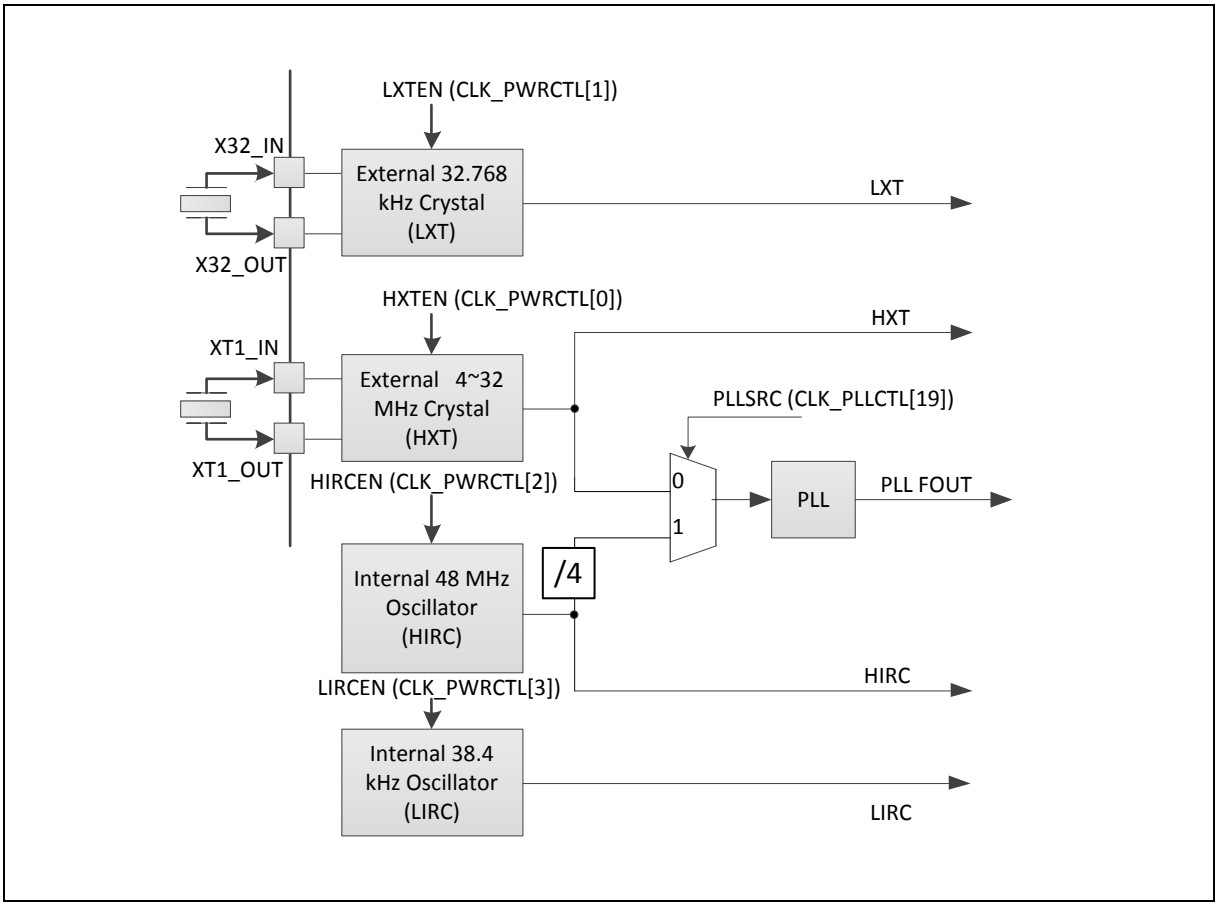

Figure 6.2-3 Clock Generator Block Diagram

6.2.3 System Clock and SysTick Clock

The system clock has 5 clock sources, which were generated from clock generator block. The clock source switch depends on the register HCLKSEL (CLK_CLKSEL0[2:0]). The block diagram is shown in Figure 6.2-4

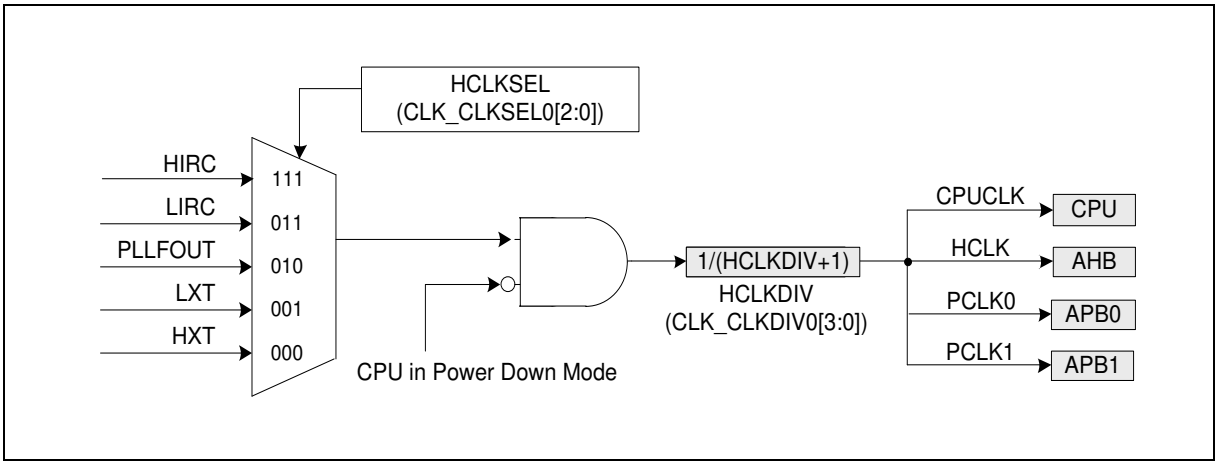

Figure 6.2-4 System Clock Block Diagram

There are two clock fail detectors to observe HXT and LXT clock source and they have individual enable and interrupt control. When HXT detector is enabled, the HIRC clock is enabled automatically. When LXT detector is enabled, the LIRC clock is enabled automatically.

When HXT clock detector is enabled, the system clock will auto switch to HIRC if HXT clock stop being detected on the following condition: system clock source comes from HXT or system clock source comes from PLL with HXT as the input of PLL. If HXT clock stop condition is detected, the HXTFIF (CLK_CLKDSTS[0]) is set to 1 and chip will enter interrupt if HXTFIEN (CLK_CLKDCTL[5]) is set to 1. User can trying to recover HXT by disable HXT and enable HXT again to check if the clock stable bit is set to 1 or not. If HXT clock stable bit is set to 1, it means HXT is recover to oscillate after re-enable action and user can switch system clock to HXT again.

The HXT clock stop detect and system clock switch to HIRC procedure is shown in Figure 6.2-5.

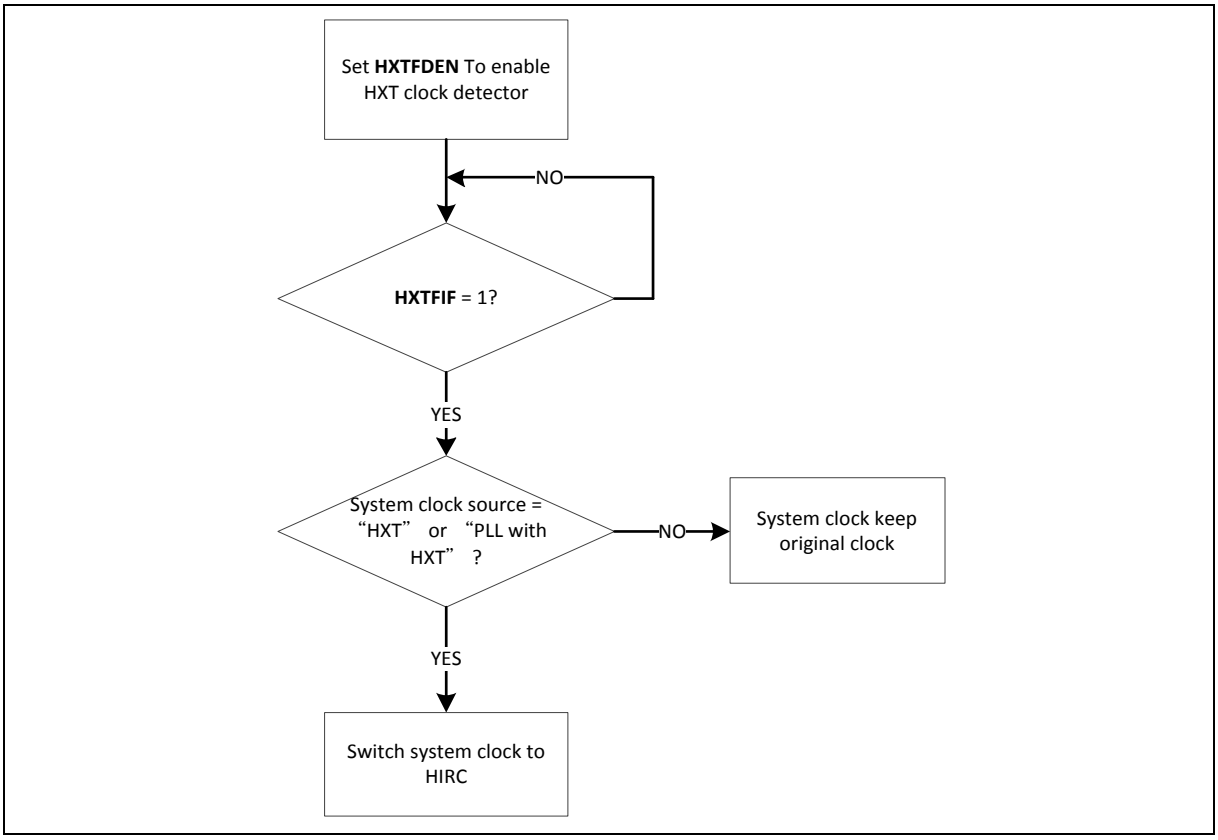

Figure 6.2-5 HXT Stop Protect Procedure

When LXT clock detector is enabled, the system clock will auto switch to LIRC if LXT clock stop being detected when system clock source comes from LXT. If LXT clock stop condition is detected, the LXTFIF (CLK_CLKDSTS[1]) is set to 1 and chip will enter interrupt if LXTFIEN (CLK_CLKDCTL[13]) is set to 1. User can trying to recover LXT by disable LXT and enable LXT again to check if the clock stable bit is set to 1 or not. If LXT clock stable bit is set to 1, it means LXT is recover to oscillate after re-enable action and user can switch system clock to LXT again.

The LXT clock stop detect and system clock switch to LIRC procedure is shown in Figure 6.2-6.

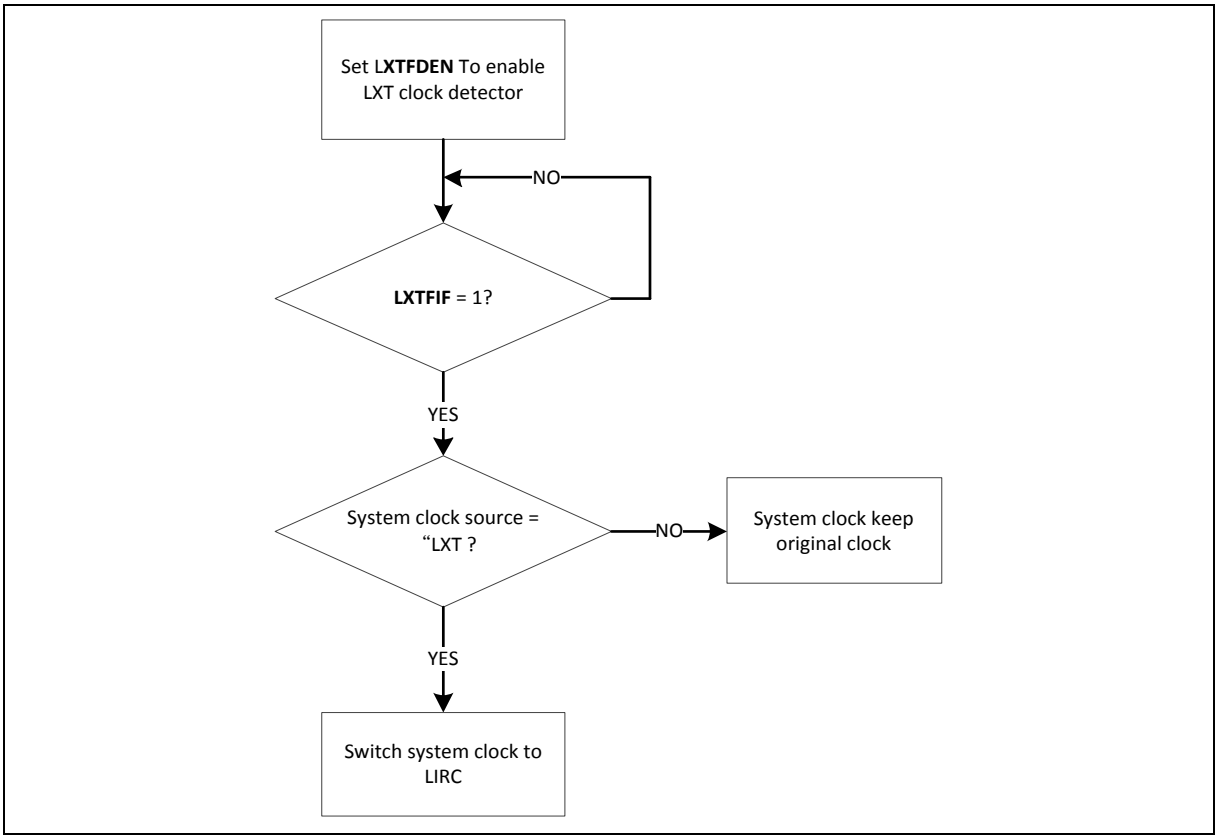

Figure 6.2-6 LXT Stop Protect Procedure

The clock source of SysTick in Cortex®-M0 core can use CPU clock or external clock (SYST_CTRL[2]). If using external clock, the SysTick clock (STCLK) has 5 clock sources. The clock source switch depends on the setting of the register STCLKSEL (CLK_CLKSEL0[5:3]). The block diagram is shown in Figure 6.2-7.

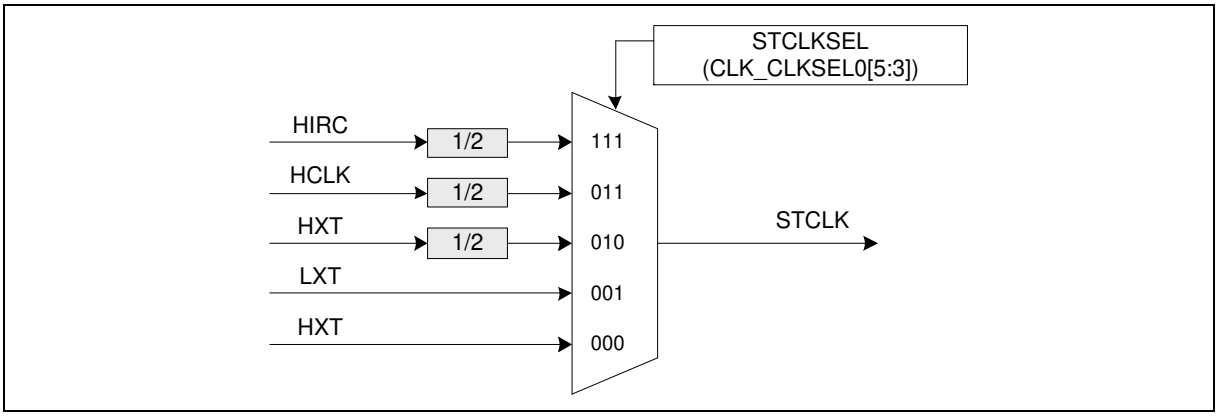

Figure 6.2-7 SysTick Clock Control Block Diagram

6.2.4 Peripherals Clock

The peripherals clock has different clock source switch setting, which depends on the different peripheral. Please refer to the CLK_CLKSELx register description.

6.2.5 Power-down Mode Clock

When entering Power-down mode, system clocks, some clock sources and some peripheral clocks are disabled. Some clock sources and peripherals clock are still active in Power-down mode.

For theses clocks, which still keep active, are listed below:

- Clock Generator
  - 38.4 kHz internal low speed RC oscillator (LIRC) clock
  - 32.768 kHz external low speed crystal oscillator (LXT) clock
- Peripherals Clock (When the modules adopt LXT or LIRC as clock source)

6.2.6 Clock Output

This device is equipped with a power-of-2 frequency divider which is composed by16 chained divide-by-2 shift registers. One of the 16 shift register outputs selected by a sixteen to one multiplexer is reflected to CLKO function pin. Therefore there are 16 options of power-of-2 divided clocks with the frequency from $F_{in}/2^1$ to $F_{in}/2^{16}$ where F_{in} is input clock frequency to the clock divider.

The output formula is $\mathbf{F_{out} = F_{in}/2^{(N+1)}}$, where F_{in} is the input clock frequency, F_{out} is the clock divider output frequency and N is the 4-bit value in FREQSEL (CLK_CLKOCTL[3:0]).

When writing 1 to CLKOEN (CLK_CLKOCTL[4]), the chained counter starts to count. When writing 0 to CLKOEN (CLK_CLKOCTL[4]), the chained counter continuously runs till divided clock reaches low state and stays in low state.

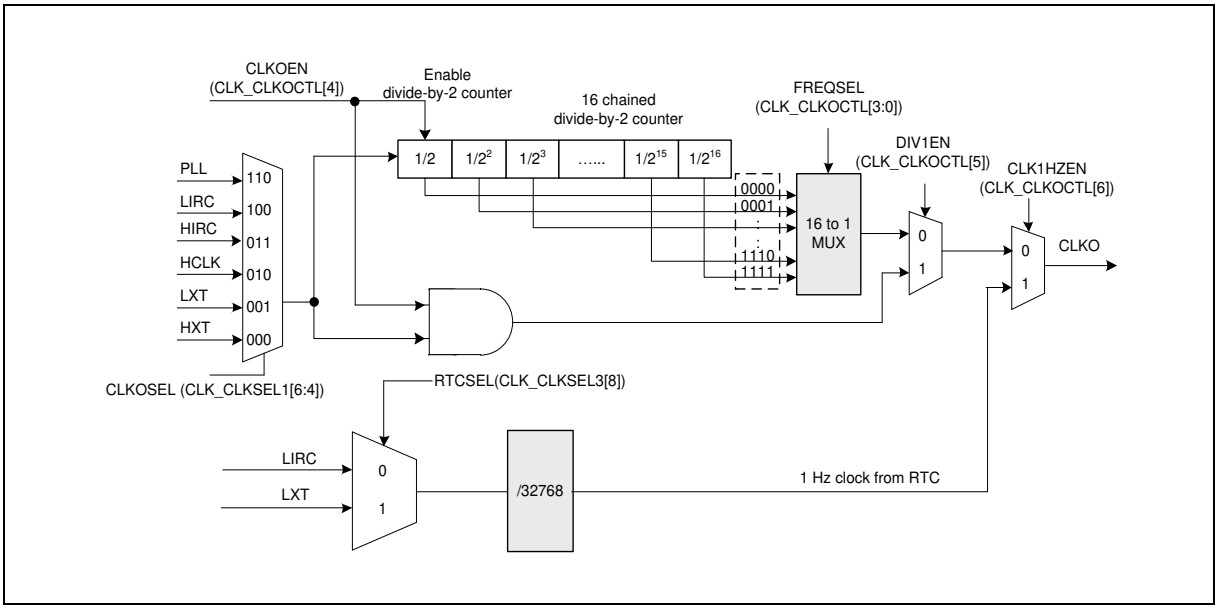

Figure 6.2-8 Clock Output Block Diagram

6.2.7 USB Clock Source

The clock source of USBD is generated from 48 MHz HIRC or programmable PLL output. The generated clocks are shown in Figure 6.2-9.

USBDIV is the clock divider output frequency, the output formula is

(PLLFOUT frequency) / (USBDIV + 1).

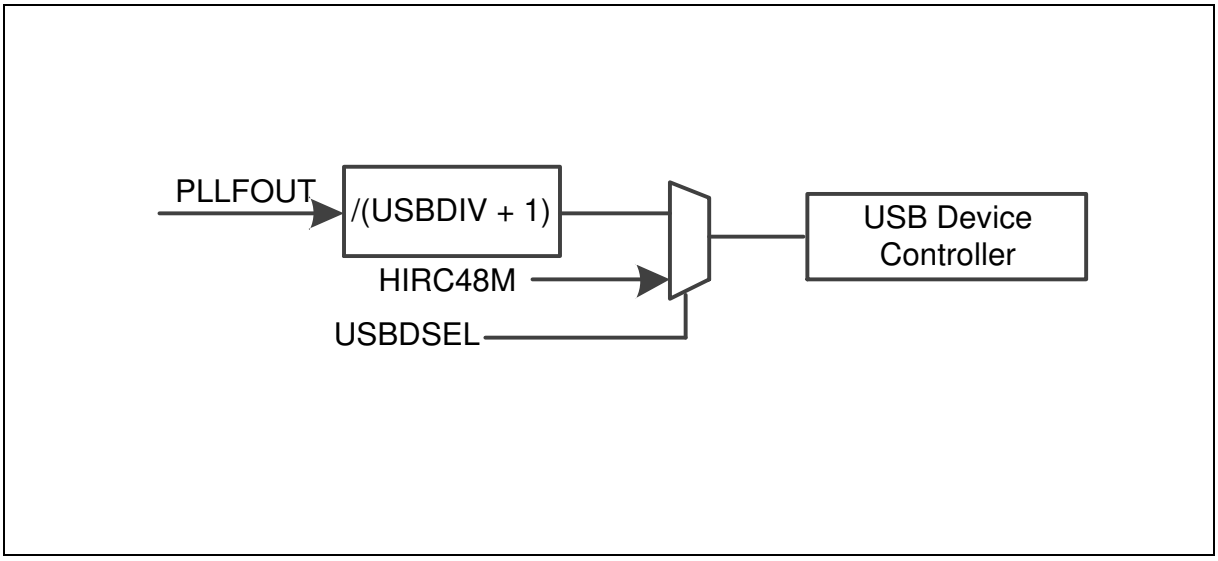

Figure 6.2-9 USBD Clock Source

6.3 System Manager

6.3.1 Overview

System management includes the following sections:

- System Reset
- System Power Distribution
- SRAM Memory Orginization
- System Timer (SysTick)
- Nested Vectored Interrupt Controller (NVIC)
- System Control register

6.3.2 System Reset

The system reset can be issued by one of the events listed below. These reset event flags can be read from SYS_RSTSTS register to determine the reset source. Hardware reset sourcces are from peripheral signals. Software reset can trigger reset through setting control registers.

- Hardware Reset Sources
  - Power-on Reset
  - Low level on the nRESET pin
  - Watchdog Time-out Reset and Window Watchdog Reset (WDT/WWDT Reset)
  - Low Voltage Reset (LVR)
  - Brown-out Detector Reset (BOD Reset)
  - CPU Lockup Reset
- Software Reset Sources
  - CHIP Reset will reset whole chip by writing 1 to CHIPRST (SYS_IPRST0[0])
  - MCU Reset to reboot but keeping the booting setting from APROM or LDROM by writing 1 to SYSRESETREQ (AIRCR[2])
  - CPU Reset for Cortex®-M0 core Only by writing 1 to CPURST (SYS_IPRST0[1])
  - nRESET glitch filter time 32us

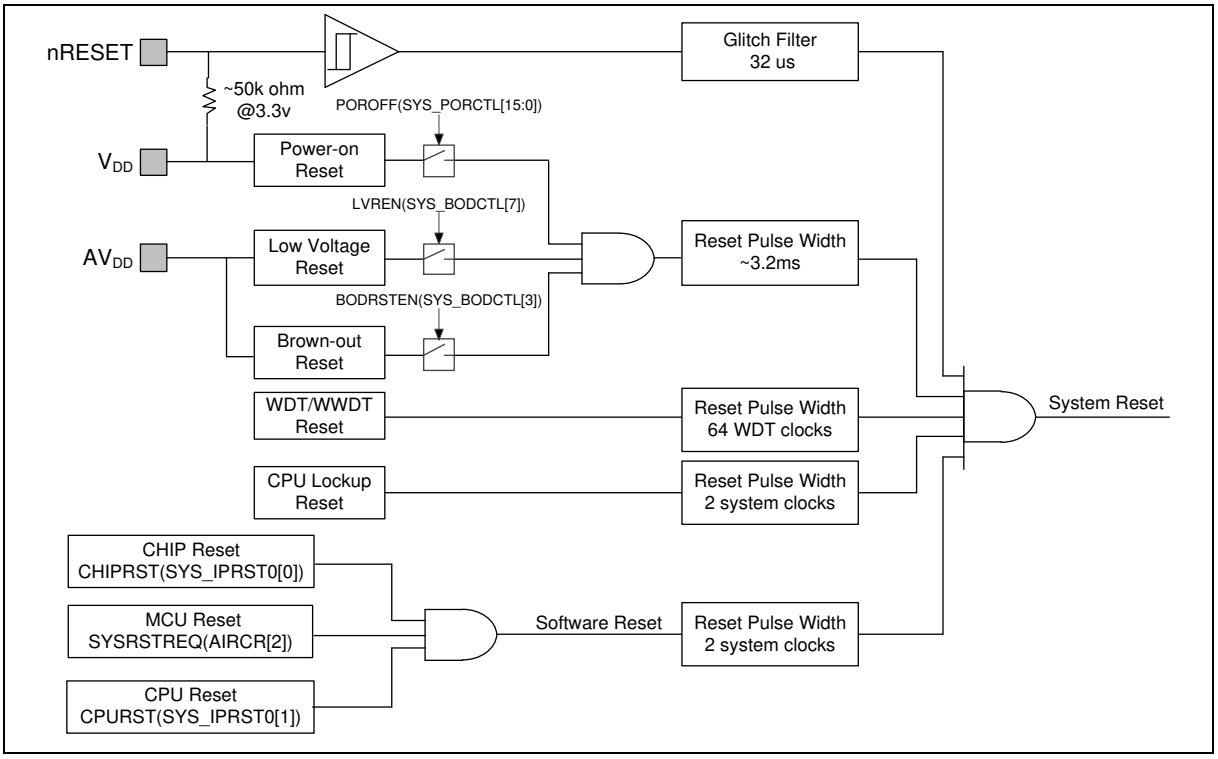

Figure 6.3-1 System Reset Sources

There are a total of 9 reset sources in the NuMicro® family. In general, CPU reset is used to reset Cortex®-M0 only; the other reset sources will reset Cortex®-M0 and all peripherals. However, there are small differences between each reset source and they are listed in Table 6.3-1.

Reset Sources **Register**	**POR**	**nRESET**	**WDT**	**LVR**	**BOD**	**Lockup**	**CHIP**	**MCU**	**CPU**
SYS_RSTSTS	0x001	Bit 1 = 1	Bit 2 = 1	Bit 3 = 1	Bit 4 = 1	Bit 8 = 1	Bit 0 = 1	Bit 5 = 1	Bit 7 = 1
CHIPRST (SYS_IPRST0[0])	0x0	-	-	-	-	-	-	-	-
BODEN (SYS_BODCTL[0])	Reload from CONFIG0	Reload from CONFIG0	Reload from CONFIG0	Reload from CONFIG0	-	Reload from CONFIG0	Reload from CONFIG0	Reload from CONFIG0	-
BODVL (SYS_BODCTL[16])									
BODRSTEN (SYS_BODCTL[3])									
HXTEN (CLK_PWRCTL[0])	Reload from CONFIG0	Reload from CONFIG0	Reload from CONFIG0	Reload from CONFIG0	Reload from CONFIG0	Reload from CONFIG0	Reload from CONFIG0	Reload from CONFIG0	
LXTEN (CLK_PWRCTL[1])	0x0	-	-	-	-	-	-	-	-
LXTSELXT (CLK_PWRCTL[24])	0x0	-	-	-	-	-	-	-	-
LXTGAIN	0x1	-	-	-	-	-	-	-	-

(CLK_PWRCTL[25:26])									
WDTCKEN (CLK_APBCLK0[0])	0x1	-	0x1	-	-	-	0x1	-	-
HCLKSEL (CLK_CLKSEL0[2:0])	Reload from CONFIG0	Reload from CONFIG0	Reload from CONFIG0	Reload from CONFIG0	Reload from CONFIG0	Reload from CONFIG0	Reload from CONFIG0	Reload from CONFIG0	-
WDTSEL (CLK_CLKSEL1[1:0])	0x3	0x3	-	-	-	-	-	-	-
HXTSTB (CLK_STATUS[0])	0x0	-	-	-	-	-	-	-	-
LXTSTB (CLK_STATUS[1])	0x0	-	-	-	-	-	-	-	-
PLLSTB (CLK_STATUS[2])	0x0	-	-	-	-	-	-	-	-
HIRCSTB (CLK_STATUS[4])	0x0	-	-	-	-	-	-	-	-
CLKSFAIL (CLK_STATUS[7])	0x0	0x0	-	-	-	-	-	-	-
RSTEN (WDT_CTL[1]) WDTEN (WDT_CTL[7])	Reload from CONFIG0	Reload from CONFIG0	Reload from CONFIG0	Reload from CONFIG0	Reload from CONFIG0	-	Reload from CONFIG0	-	-
WDT_CTL except bit 1 and bit 7.	0x0700	0x0700	0x0700	0x0700	0x0700	-	0x0700	-	-
WDT_ALTCTL	0x0000	0x0000	0x0000	0x0000	0x0000	-	0x0000	-	-
WWDT_RLDCNT	0x0000	0x0000	0x0000	0x0000	0x0000	-	0x0000	-	-
WWDT_CTL	0x3F0800	0x3F0800	0x3F0800	0x3F0800	0x3F0800	-	0x3F0800	-	-
WWDT_STATUS	0x0000	0x0000	0x0000	0x0000	0x0000	-	0x0000	-	-
WWDT_CNT	0x3F	0x3F	0x3F	0x3F	0x3F	-	0x3F	-	-
BS (FMC_ISPCTL[1])	Reload from CONFIG0	Reload from CONFIG0	Reload from CONFIG0	Reload from CONFIG0	Reload from CONFIG0	-	Reload from CONFIG0	-	-
FMC_DFBA	Reload from CONFIG1	Reload from CONFIG1	Reload from CONFIG1	Reload from CONFIG1	Reload from CONFIG1	-	Reload from CONFIG1	-	-
CBS (FMC_ISPSTS[2:1))	Reload from CONFIG0	Reload from CONFIG0	Reload from CONFIG0	Reload from CONFIG0	Reload from CONFIG0	-	Reload from CONFIG0	-	-
VECMAP (FMC_ISPSTS[23:9])	Reload base on CONFIG0	Reload base on CONFIG0	Reload base on CONFIG0	Reload base on CONFIG0	Reload base on CONFIG0	-	Reload base on CONFIG0	-	-
Other Peripheral Registers	Reset Value								-

FMC Registers	Reset Value
Note: '-' means that the value of register keeps original setting.	

Table 6.3-1 Reset Value of Registers

6.3.2.1 nRESET Reset

The nRESET reset means to generate a reset signal by pulling low nRESET pin, which is an asynchronous reset input pin and can be used to reset system at any time. When the nRESET voltage is lower than 0.2 V_{DD} and the state keeps longer than 32 us (glitch filter), chip will be reset. The nRESET reset will control the chip in reset state until the nRESET voltage rises above 0.7 V_{DD} and the state keeps longer than 32 us (glitch filter). The PINRF(SYS_RSTSTS[1]) will be set to 1 if the previous reset source is nRESET reset. Table 6.3-2 shows the nRESET reset waveform.

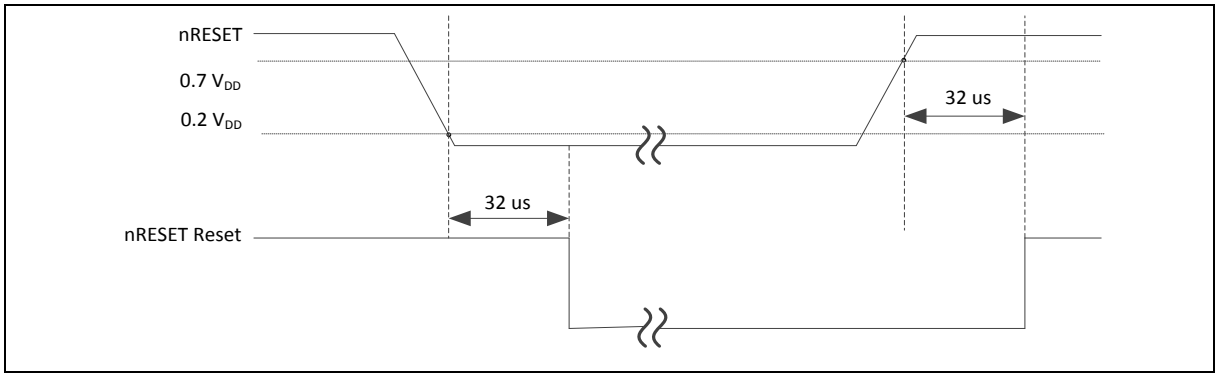

Figure 6.3-2 nRESET Reset Waveform

6.3.2.2 Power-on Reset (POR)

The Power-on reset (POR) is used to generate a stable system reset signal and forces the system to be reset when power-on to avoid unexpected behavior of MCU. When applying the power to MCU, the POR module will detect the rising voltage and generate reset signal to system until the voltage is ready for MCU operation. At POR reset, the PORF(SYS_RSTSTS[0]) will be set to 1 to indicate there is a POR reset event. The PORF(SYS_RSTSTS[0]) bit can be cleared by writing 1 to it. Figure 6.3-3 shows the power-on reset waveform.

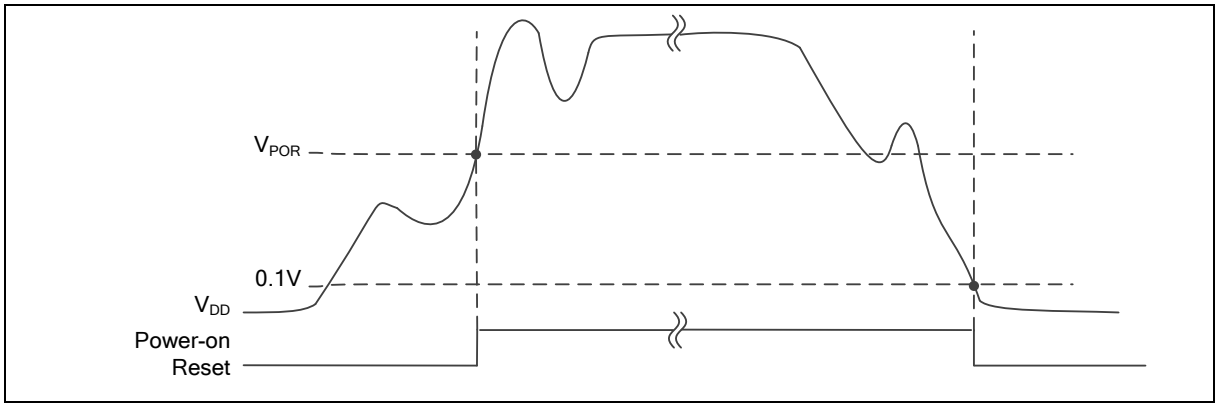

Figure 6.3-3 Power-on Reset (POR) Waveform

6.3.2.3 Low Voltage Reset (LVR)

If the Low Voltage Reset function is enabled by setting the Low Voltage Reset Enable Bit LVREN (SYS_BODCTL[7]) to 1, after 200us delay, LVR detection circuit will be stable and the LVR function will be active. Then LVR function will detect AV_{DD} during system operation. When the AV_{DD} voltage is lower than V_{LVR} and the state keeps longer than De-glitch time set by LVRDGSEL (SYS_BODCTL[14:12]), chip will be reset. The LVR reset will control the chip in reset state until the AV_{DD} voltage rises above V_{LVR} and the state keeps longer than De-glitch time set by LVRDGSEL (SYS_BODCTL[14:12]). The default setting of Low Voltage Reset is enabled without De-glitch function. Figure 6.3-4 shows the Low Voltage Reset waveform.

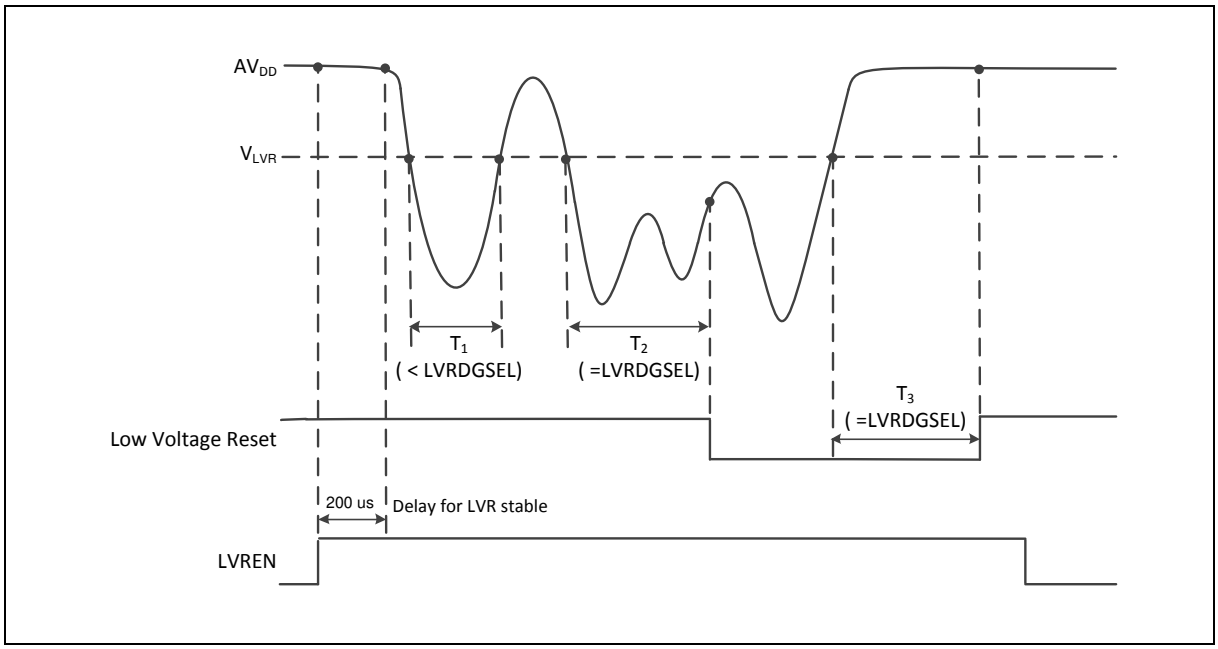

Figure 6.3-4 Low Voltage Reset (LVR) Waveform

6.3.2.4 Brown-out Detector Reset (BOD Reset)

If the Brown-out Detector (BOD) function is enabled by setting the Brown-out Detector Enable Bit BODEN (SYS_BODCTL[0]), Brown-out Detector function will detect AV_{DD} during system operation. When the AV_{DD} voltage is lower than V_{BOD} which is decided by BODEN and BODVL (SYS_BODCTL[16]) and the state keeps longer than De-glitch time set by BODDGSEL (SYS_BODCTL[10:8]), chip will be reset. The BOD reset will control the chip in reset state until the AV_{DD} voltage rises above V_{BOD} and the state keeps longer than De-glitch time set by BODDGSEL. The default value of BODEN, BODVL and BODRSTEN (SYS_BODCTL[3]) is set by Flash controller user configuration register CBODEN (CONFIG0 [19]), CBOV (CONFIG0 [23:21]) and CBORST(CONFIG0[20]) respectively. User can determine the initial BOD setting by setting the CONFIG0 register. Figure 6.3-5 shows the Brown-out Detector waveform.

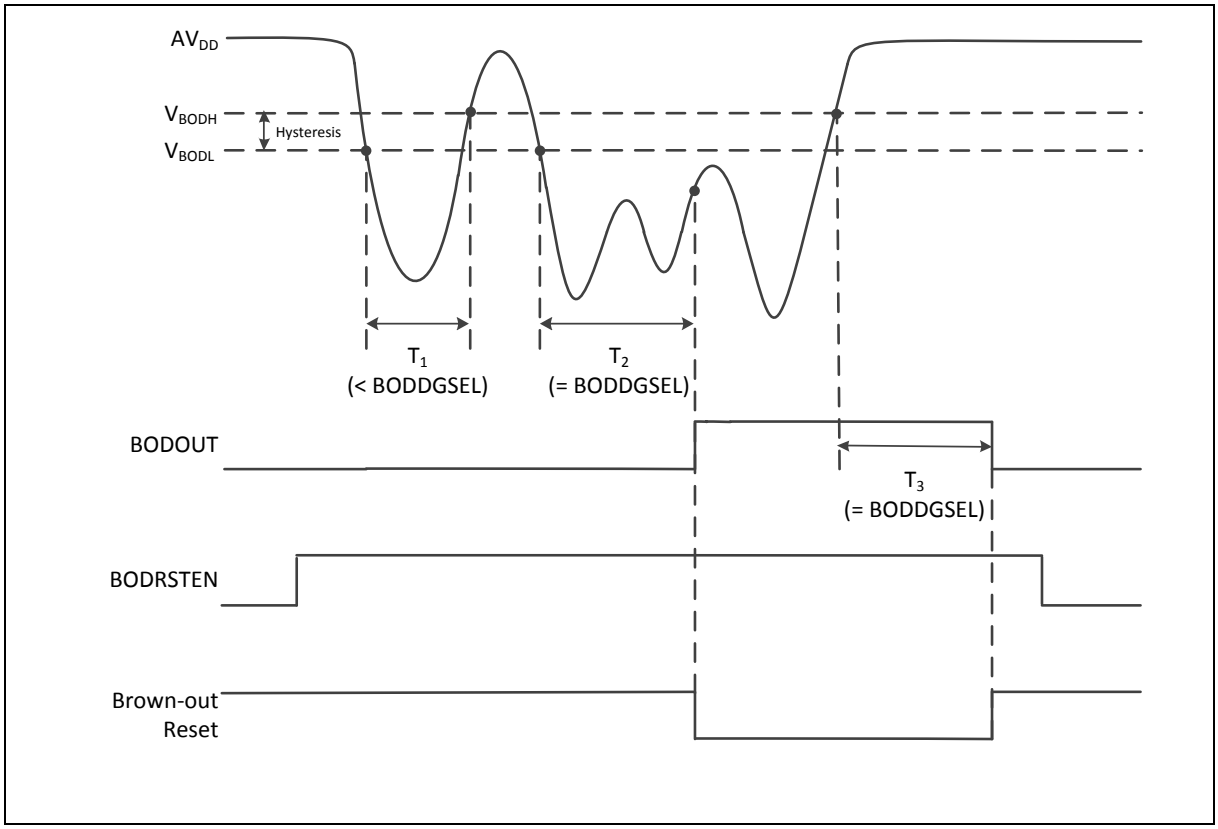

Figure 6.3-5 Brown-out Detector (BOD) Waveform

6.3.2.5 Watchdog Timer Reset (WDT)

In most industrial applications, system reliability is very important. To automatically recover the MCU from failure status is one way to improve system reliability. The watchdog timer(WDT) is widely used to check if the system works fine. If the MCU is crashed or out of control, it may cause the watchdog time-out. User may decide to enable system reset during watchdog time-out to recover the system and take action for the system crash/out-of-control after reset.

Software can check if the reset is caused by watchdog time-out to indicate the previous reset is a watchdog reset and handle the failure of MCU after watchdog time-out reset by checking WDTRF(SYS_RSTSTS[2]).

6.3.2.6 CPU Lockup Reset

CPU enters lockup status after CPU produces hardfault at hardfault handler and chip gives immediate indication of seriously errant kernel software. This is the result of the CPU being locked because of an unrecoverable exception following the activation of the processor's built in system state protection hardware. When chip enters debug mode, the CPU lockup reset will be ignored.

6.3.2.7 CPU Reset, CHIP Reset and MCU Reset

The CPU Reset means only Cortex®-M0 core is reset and all other peripherals remain the same status after CPU reset. User can set the CPURST(SYS_IPRST0[1]) to 1 to assert the CPU Reset signal.

The CHIP Reset is same with Power-on Reset. The CPU and all peripherals are reset and BS(FMC_ISPCTL[1]) bit is automatically reloaded from CONFIG0 setting. User can set the CHIPRST(SYS_IPRST0[0]) to 1 to assert the CHIP Reset signal.

The MCU Reset is similar with CHIP Reset. The difference is that BS(FMC_ISPCTL[1]) will not be reloaded from CONFIG0 setting and keep its original software setting for booting from APROM or LDROM. User can set the SYSRESETREQ(AIRCR[2]) to 1 to assert the MCU Reset.

6.3.3 System Power Distribution

In this chip, power distribution is divided into three segments:

- Analog power from AV_{DD} and AV_{SS} provides the power for analog components operation.
- Digital power from V_{DD} and V_{SS} supplies the power to the internal regulator which provides a fixed 1.8V power for digital operation and I/O pins.
- USB transceiver power from VBUS offers the power for operating the USB transceiver.

The outputs of internal voltage regulators, LDO and V_{DD}, require an external capacitor which should be located close to the corresponding pin. Figure 6.3-6 shows the NuMicro® M031 power distribution.

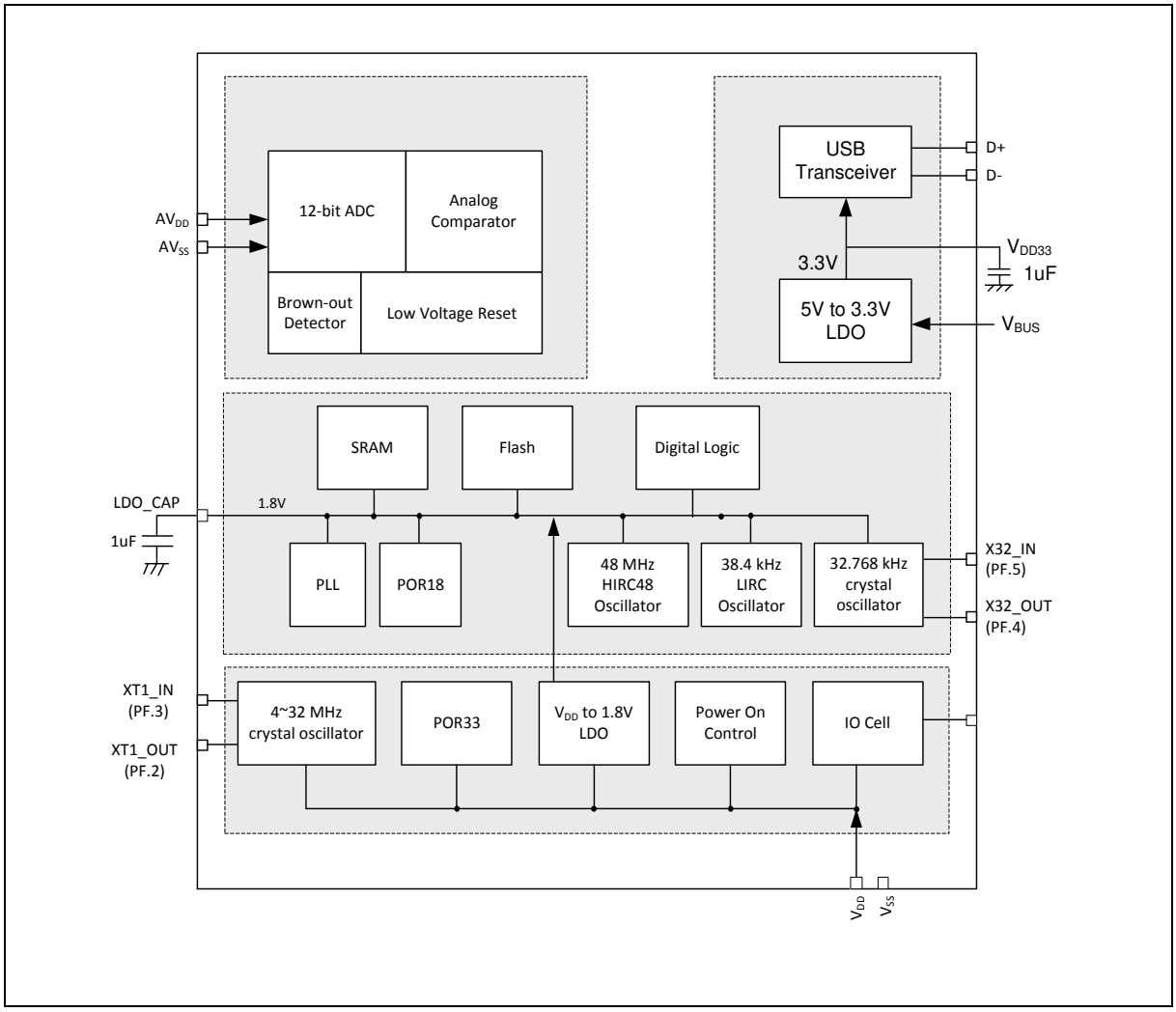

Figure 6.3-6 NuMicro® M031 Power Distribution Diagram

6.3.4 Power Modes and Wake-up Sources

The M031/M032 series has power manager unit to support several operating modes for saving power. Table 6.3-2 lists all power mode in the M031/M032 series.

Mode	CPU Operating Maximum Speed (MHz)	LDO_CAP(V)	Clock Disable
Normal mode	72 MHz at 2.0V-3.6V 48 MHz at 1.8V-3.6V	1.8	All clocks are disabled by control register.

Idle mode	CPU enter Sleep mode	1.8	Only CPU clock is disabled.
Power-down mode	CPU enters Power-down mode	1.8	Most clocks are disabled except LIRC/LXT, and only WDT/Timer/UART/RTC peripheral clocks still enable if their clock sources are selected as LIRC/LXT.

Table 6.3-2 Power Mode Table

There are different power mode entry settings and leaving condition for each power mode. Table 6.3-3 shows the entry setting for each power mode. When chip power-on, chip is running in normal mode. User can enter each mode by setting SLEEPDEEP (SCR[2]), PDEN (CLK_PWRCT:[7]) and execute WFI instruction.

Register/Instruction Mode	**SLEEPDEEP (SCR[2])**	**PDEN (CLK_PWRCTL[7])**	**CPU Run WFI Instruction**
Normal mode	0	0	NO
Idle mode (CPU enter Sleep mode)	0	0	YES
Power-down mode (CPU enters Deep Sleep mode)	1	1	YES

Table 6.3-3 Power Mode Difference Table

There are several wake-up sources in Idle mode and Power-down mode. Table 6.3-4 lists the available clocks for each power mode.

Power Mode	**Normal Mode**	**Idle Mode**	**Power-Down Mode**
Definition	CPU is in active state	CPU is in sleep state	CPU is in sleep state and all clocks stop except LXT and LIRC. SRAM content retended.
Entry Condition	Chip is in normal mode after system reset released	CPU executes WFI instruction.	CPU sets sleep mode enable and power down enable and executes WFI instruction.
Wake-up Sources	N/A	All interrupts	WDT, I²C, Timer, UART, BOD, GPIO, EINT, USCI, USBD, ACMP, and RTC
Available Clocks	All	All except CPU clock	LXT and LIRC
After Wake-up	N/A	CPU back to normal mode	CPU back to normal mode

Table 6.3-4 Power Mode Difference Table

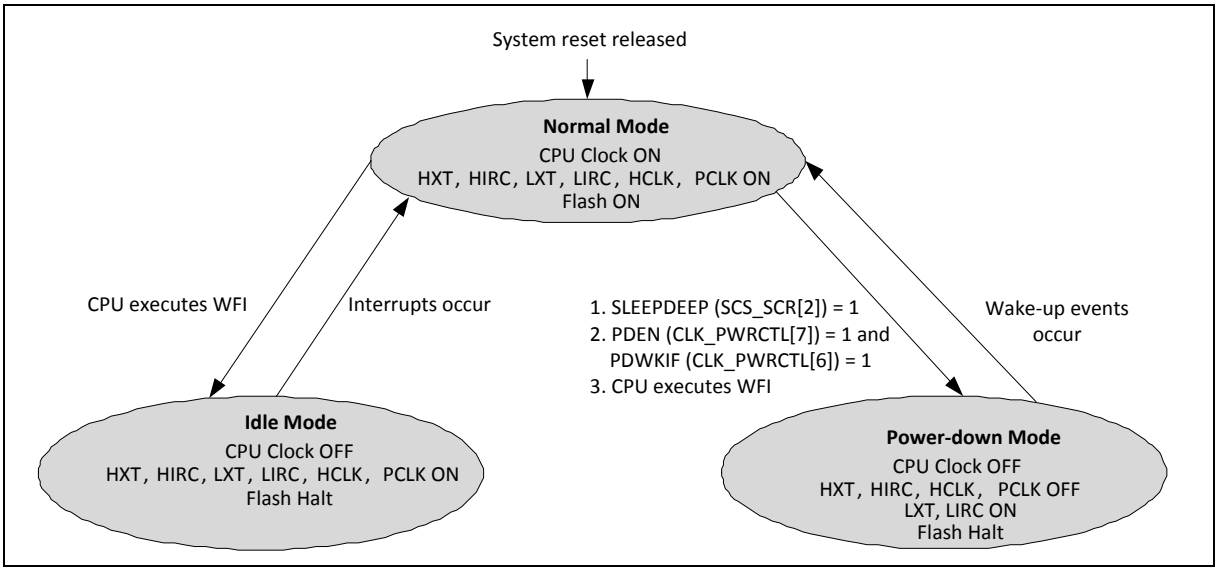

Figure 6.3-7 Power Mode State Machine

1. LXT (32768 Hz XTL) ON or OFF depends on SW setting in normal mode.
2. LIRC (38.4 kHz OSC) ON or OFF depends on S/W setting in normal mode.
3. If TIMER clock source is selected as LIRC/LXT and LIRC/LXT is on.
4. If WDT clock source is selected as LIRC and LIRC is on.
5. If UART clock source is selected as LXT and LXT is on.
6. If RTC clock source is selected as LIRC/LXT and LIRC/LXT is on.

	Normal Mode	Idle Mode	Power-Down Mode
HXT (4~32 MHz XTL)	ON	ON	Halt
HIRC48 (48 MHz OSC)	ON	ON	Halt
LXT (32768 Hz XTL)	ON	ON	ON/OFF[1]
LIRC (38.4 kHz OSC)	ON	ON	ON/OFF[2]
PLL	ON/OFF	ON/OFF	Halt
LDO	ON	ON	ON
CPU	ON	Halt	Halt
HCLK/PCLK	ON	ON	Halt
SRAM retention	ON	ON	ON
FLASH	ON	ON	Halt
GPIO	ON	ON	Halt
PDMA	ON	ON	Halt
TIMER	ON	ON	ON/OFF[3]
PWM	ON	ON	Halt
BPWM	ON	ON	Halt

WDT	ON	ON	ON/OFF[4]
WWDT	ON	ON	Halt
UART	ON	ON	ON/OFF[5]
USCI	ON	ON	Halt
I^2C	ON	ON	Halt
SPI	ON	ON	Halt
QSPI	ON	ON	Halt
USBD	ON	ON	Halt
ADC	ON	ON	Halt
ACMP	ON	ON	Halt
RTC	ON	ON	ON/OFF[6]

Table 6.3-5 Clocks in Power Modes

Wake-up sources in Power-down mode:

WDT, I²C, Timer, UART, USCI, BOD, GPIO, USBD, ACMP, and RTC.

After chip enters power down, the following wake-up sources can wake chip up to normal mode. Table 6.3-5 lists the condition about how to enter Power-down mode again for each peripheral.

*User needs to wait this condition before setting PDEN(CLK_PWRCTL[7]) and execute WFI to enter Power-down mode.

Wake-Up Source	Wake-Up Condition	System Can Enter Power-Down Mode Again Condition*
BOD	Brown-Out Detector Interrupt	After software writes 1 to clear (SYS_BODCTL[4]).
INT	External Interrupt	After software write 1 to clear the Px_INTSRC[n] bit.
GPIO	GPIO Interrupt	After software write 1 to clear the Px_INTSRC[n] bit.
TIMER	Timer Interrupt	After software writes 1 to clear TWKF (TIMERx_INTSTS[1]) and TIF (TIMERx_INTSTS[0]).
WDT	WDT Interrupt	After software writes 1 to clear WKF (WDT_CTL[5]) (Write Protect).
RTC	Alarm Interrupt	After software writes 1 to clear ALMIF (RTC_INTSTS[0]).
	Time Tick Interrupt	After software writes 1 to clear TICKIF (RTC_INTSTS[1]).
UART0/1/4/5	nCTS wake-up	After software writes 1 to clear CTSWKF (UARTx_WKSTS[0]).
	Incoming Data wake-up	After software writes 1 to clear DATWKF (UARTx_WKSTS[1]).
	Received FIFO Threshold Wake-up	After software writes 1 to clear RFRTWKF (UARTx_WKSTS[2]).
	RS-485 AAD Mode Wake-up	After software writes 1 to clear RS485WKF (UARTx_WKSTS[3]).
	Received FIFO Threshold Time-out Wake-up	After software writes 1 to clear TOUTWKF (UARTx_WKSTS[4]).
UART2/3/6/7	nCTS wake-up	After software writes 1 to clear CTSWKF (UARTx_WKSTS[0]).
	Incoming Data wake-up	After software writes 1 to clear DATWKF (UARTx_WKSTS[1]).

USCI UART	CTS Toggle	After software writes 1 to clear WKF (UUART_WKSTS[0]).
	Data Toggle	After software writes 1 to clear WKF (UUART_WKSTS[0]).
USCI I^2C	Data toggle	After software writes 1 to clear WKF (UI2C_WKSTS[0]).
	Address match	After software writes 1 to clear WKAKDONE (UI2C_PROTSTS[16], and then writes 1 to clear WKF (UI2C_WKSTS[0]).
USCI SPI	SS Toggle	After software writes 1 to clear WKF (USPI_WKSTS[0]).
I^2C	Address match	After software writes 1 to clear WKIF (I2C_WKSTS[0]).
USBD	Remote Wake-up	After software writes 1 to clear BUSIF (USBD_INTSTS[0]).
ACMP	Comparator Power-Down Wake-Up Interrupt	After software writes 1 to clear WKIF0 (ACMP_STATUS[8]) and WKIF1 (ACMP_STATUS[9]).

Table 6.3-6 Condition of Entering Power-down Mode Again

6.3.5 System Memory Map

The NuMicro® M031/M032 series provides 4G-byte addressing space. The memory locations assigned to each on-chip controllers are shown inTable 6.3-7. The detailed register definition, memory space, and programming will be described in the following sections for each on-chip peripheral. The M031/M032 series only supports little-endian data format.

Address Space	Token	Controllers
Flash and SRAM Memory Space		
0x0000_0000 – 0x0007_FFFF	FLASH_BA	FLASH Memory Space (512 Kbytes)
0x2000_0000 – 0x2001_7FFF	SRAM0_BA	SRAM Memory Space (96 Kbytes)
0x6000_0000 – 0x6FFF_FFFF	EXTMEM_BA	External Memory Space (256 Mbytes)
Peripheral Controllers Space (0x4000_0000 – 0x400F_FFFF)		
0x4000_0000 – 0x4000_01FF	SYS_BA	System Control Registers
0x4000_0200 – 0x4000_02FF	CLK_BA	Clock Control Registers
0x4000_0300 – 0x4000_03FF	NMI_BA	NMI Control Registers
0x4000_4000 – 0x4000_4FFF	GPIO_BA	GPIO Control Registers
0x4000_8000 – 0x4000_8FFF	PDMA_BA	Peripheral DMA Control Registers
0x4000_C000 – 0x4000_CFFF	FMC_BA	Flash Memory Control Registers
0x4001_0000 – 0x4001_0FFF	EBI_BA	External Bus Interface Control Registers
0x4001_4000 – 0x4001_7FFF	HDIV_BA	Hardware Divider Register
0x4003_1000 – 0x4003_1FFF	CRC_BA	CRC Generator Registers
APB Controllers Space (0x4000_0000 ~ 0x400F_FFFF)		
0x4004_0000 – 0x4004_0FFF	WDT_BA	Watchdog Timer Control Registers
0x4004_1000 – 0x4004_1FFF	RTC_BA	RTC Control Registers
0x4004_3000 – 0x4004_3FFF	ADC_BA	Analog-Digital-Converter (ADC) Control Registers
0x4004_5000 – 0x4004_5FFF	ACMP01_BA	Analog Comparator 0/ 1 Control Registers
0x4005_0000 – 0x4005_0FFF	TMR01_BA	Timer0/Timer1 Control Registers

0x4005_1000 – 0x4005_1FFF	TMR23_BA	Timer2/Timer3 Control Registers
0x4005_8000 – 0x4005_8FFF	PWM0_BA	PWM0 Control Registers
0x4005_9000 – 0x4005_9FFF	PWM1_BA	PWM1 Control Registers
0x4005_A000 – 0x4005_AFFF	BPWM0_BA	BPWM0 Control Registers
0x4005_B000 – 0x4005_BFFF	BPWM1_BA	BPWM1 Control Registers
0x4006_0000 – 0x4006_0FFF	QSPI0_BA	QSPI0 Control Registers
0x4006_1000 – 0x4006_1FFF	SPI0_BA	SPI0 Control Registers
0x4007_0000 – 0x4007_0FFF	UART0_BA	UART0 Control Registers
0x4007_1000 – 0x4007_1FFF	UART1_BA	UART1 Control Registers
0x4007_2000 – 0x4007_2FFF	UART2_BA	UART2 Control Registers
0x4007_3000 – 0x4007_3FFF	UART3_BA	UART3 Control Registers
0x4007_4000 – 0x4007_4FFF	UART4_BA	UART4 Control Registers
0x4007_5000 – 0x4007_5FFF	UART5_BA	UART5 Control Registers
0x4007_6000 – 0x4007_6FFF	UART6_BA	UART6 Control Registers
0x4007_7000 – 0x4007_7FFF	UART7_BA	UART7 Control Registers
0x4008_0000 – 0x4008_0FFF	I2C0_BA	I2C0 Control Registers
0x4008_1000 – 0x4008_1FFF	I2C1_BA	I2C1 Control Registers
0x400C_0000 – 0x400C_0FFF	USBD_BA	USB Device Control Register
0x400D_0000 – 0x400D_0FFF	USCI0_BA	USCI0 Control Registers
0x400D_1000 – 0x400D_1FFF	USCI1_BA	USCI1 Control Registers
System Controllers Space (0xE000_E000 ~ 0xE000_EFFF)		
0xE000_E010 – 0xE000_E0FF	SCS_BA	System Timer Control Registers
0xE000_E100 – 0xE000_ECFF	SCS_BA	External Interrupt Controller Control Registers
0xE000_ED00 – 0xE000_ED8F	SCS_BA	System Control Registers

Table 6.3-7 Address Space Assignments for On-Chip Controllers

6.3.6 SRAM Memory Organization

The M031 supports embedded SRAM with total 16 Kbytes size

- Supports total 16 Kbytes SRAM
- Supports byte / half word / word write
- Supports oversize response error

Table 6.3-9 shows the SRAM organization of M031. The address between 0x2000_4000 to 0x3FFF_FFFF is illegal memory space and chip will enter hardfault if CPU accesses these illegal memory addresses.

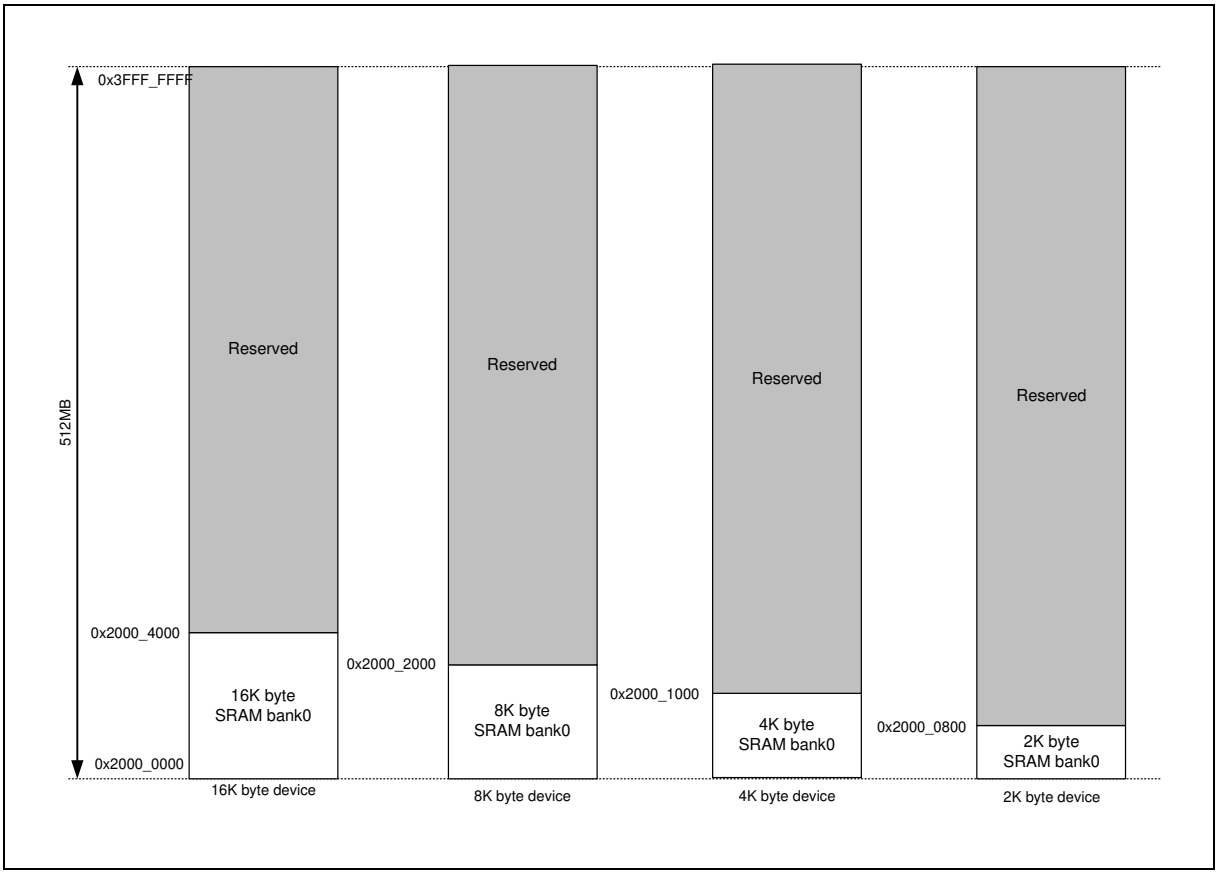

Figure 6.3-8 SRAM Memory Organization

6.3.7 SRAM Memory Organization with parity function

The M031 supports embedded SRAM with total 96 Kbytes size

- Supports total 96 Kbytes SRAM
- Supports parity error check function for SRAM bank0 section 0(32 Kbytes)
- Supports byte / half word / word write
- Supports oversize response error

Table 6.3-9 shows the SRAM organization of M031. The address between 0x2001_8000 to 0x3FFF_FFFF is illegal memory space and chip will enter hardfault if CPU accesses these illegal memory addresses. There are three section in SRAM bank0. The section 0 is addressed to 32 Kbytes with parity function, the section 1 is addressed to 32 Kbytes and the section 2 is addressed to 32 Kbytes. SRAM section 0 has byte parity error check function. When CPU is accessing SRAM section

0, the parity error checking mechanism is dynamic operating. As parity error occured, the PERRIF (SYS_SRAM_STATUS[0]) will be asserted to 1 and the SYS_SRAM_ERRADDR register will recode the address with parity error. Chip will enter interrupt when SRAM parity error occurred if PERRIEN (SYS_SRAM_INTCTL[0]) is set to 1. When SRAM parity error occured, chip will stop detecting SRAM parity error until user writes 1 to clear the PERRIF(SYS_SRAM_STATUS[0]) bit.

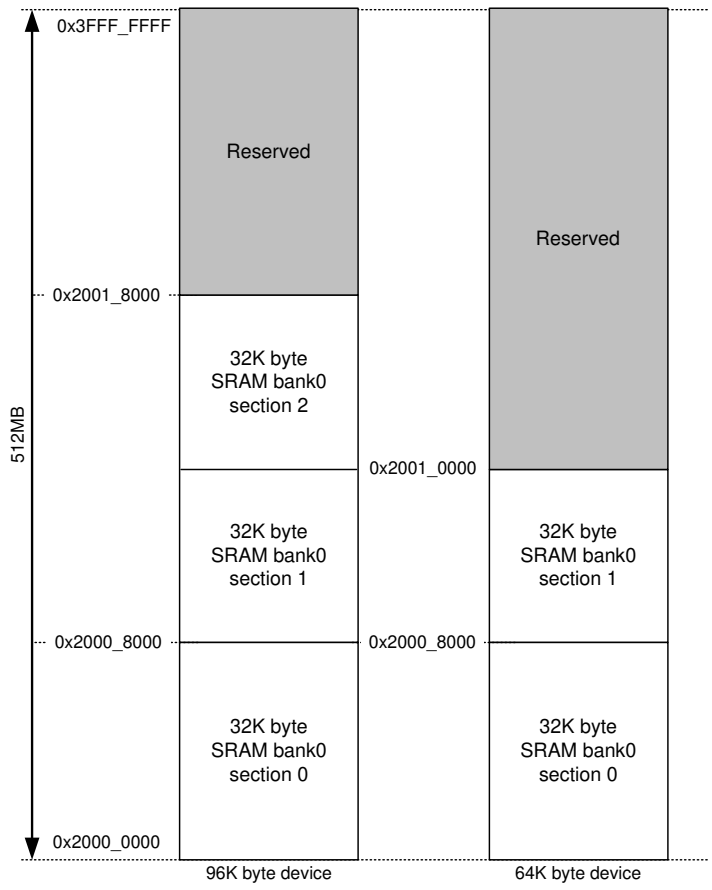

Figure 6.3-10 SRAM Memory Organization

6.3.8 Chip Bus Matrix

The M031/M032 series supports Bus Matrix to manage the access arbitration between masters. The access arbitration use round-robin algorithm as the bus priority.

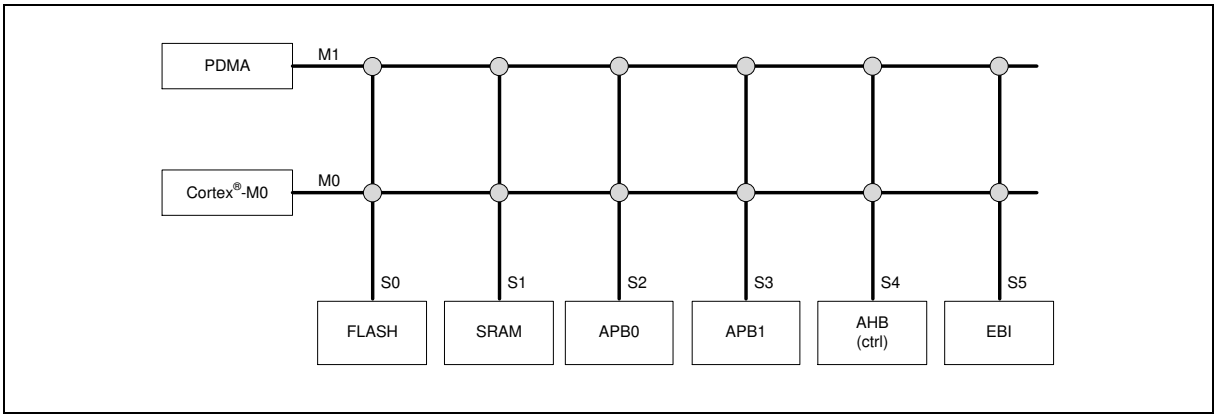

Figure 6.3-9 NuMicro® M031 Bus Matrix Diagram

6.3.9 IRC Auto Trim

This chip supports auto-trim function: the HIRC trim (48 MHz RC oscillator), according to the accurate external 32.768 kHz crystal oscillator or internal USB synchronous mode, automatically gets accurate output frequency, 0.25 % deviation within all temperature ranges.

In HIRC case, the system needs an accurate 48 MHz clock. In such case, if neither using use PLL as the system clock source nor soldering 32.768 kHz crystal in system, user has to set REFCKSEL (SYS_HIRCTRIMCTL [10] reference clock selection) to “1”, set FREQSEL (SYS_HIRCTRIMCTL [1:0] trim frequency selection) to “01”, and the auto-trim function will be enabled. Interrupt status bit FREQLOCK (SYS_HIRCTRIMSTS[0] HIRC frequency lock status) “1” indicates the HIRC output frequency is accurate within 0.25% deviation.

6.3.10 Register Lock Control

Some of the system control registers need to be protected to avoid inadvertent write and disturb the chip operation. These system control registers are protected after the power-on reset till user to disable register protection. For user to program these protected registers, a register protection disable sequence needs to be followed by a special programming. The register protection disable sequence is writing the data “59h”, “16h” “88h” to the register SYS_REGLCTL address at 0x4000_0100 continuously. Any different data value, different sequence or any other write to other address during these three data writing will abort the whole sequence. All proteced control registers are noted “(Write Protect)” and add an note “**Note:** This bit is write protected. Refer to the SYS_REGLCTL register “ in register description field.

6.3.11 UART0_TXD/USCI0_DAT0 modulation with PWM

This chip supports UART0_TXD/USCI_DAT0 to modulate with PWM channel. User can set MODPWMSEL(SYS_MODCTL[7:4]) to choose which PWM0 channel to modulate with UART0_TXD/USCI0_DAT0 and set MODEN(SYS_MODCTL[0]) to enable modulation function. User can set TXDINV(UART_LINE[8]) to inverse UART0_TXD or DATOINV(UUART_LINECTL[5]) to inverse USCI0_DAT0 before modulating with PWM.

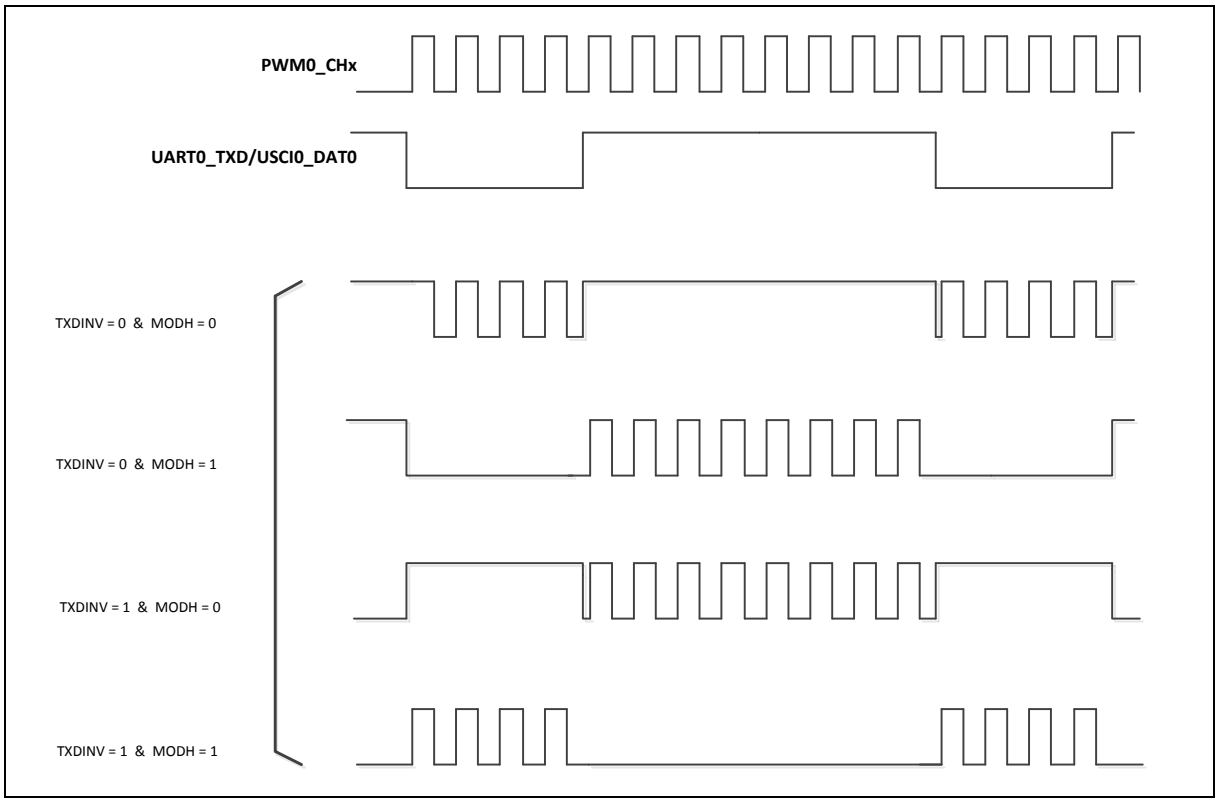

Figure 6.3-11 UART0_TXD/USCI0_DAT0 Modulated with PWM Channel

6.3.12 System Timer (SysTick)

The Cortex®-M0 includes an integrated system timer, SysTick, which provides a simple, 24-bit clear-on-write, decrementing, wrap-on-zero counter with a flexible control mechanism. The counter can be used as a Real Time Operating System (RTOS) tick timer or as a simple counter.

When system timer is enabled, it will count down from the value in the SysTick Current Value Register (SYST_VAL) to zero, and reload (wrap) to the value in the SysTick Reload Value Register (SYST_LOAD) on the next clock cycle, and then decrement on subsequent clocks. When the counter transitions to zero, the COUNTFLAG status bit is set. The COUNTFLAG bit clears on reads.

The SYST_VAL value is UNKNOWN on reset. Software should write to the register to clear it to zero before enabling the feature. This ensures the timer will count from the SYST_LOAD value rather than an arbitrary value when it is enabled.

If the SYST_LOAD is zero, the timer will be maintained with a current value of zero after it is reloaded with this value. This mechanism can be used to disable the feature independently from the timer enable bit.

For more detailed information, please refer to the “Arm® Cortex®-M0 Technical Reference Manual” and “Arm® v6-M Architecture Reference Manual”.

6.3.13 Nested Vectored Interrupt Controller (NVIC)

The Cortex®-M0 provides an interrupt controller as an integral part of the exception mode, named as "Nested Vectored Interrupt Controller (NVIC)", which is closely coupled to the processor core and provides following features:

- Nested and Vectored interrupt support
- Automatic processor state saving and restoration
- Reduced and deterministic interrupt latency

The NVIC prioritizes and handles all supported exceptions. All exceptions are handled in "Handler Mode". This NVIC architecture supports 32 (IRQ[31:0]) discrete interrupts with 4 levels of priority. All of the interrupts and most of the system exceptions can be configured to different priority levels. When an interrupt occurs, the NVIC will compare the priority of the new interrupt to the current running one's priority. If the priority of the new interrupt is higher than the current one, the new interrupt handler will override the current handler.

When an interrupt is accepted, the starting address of the interrupt service routine (ISR) is fetched from a vector table in memory. There is no need to determine which interrupt is accepted and branch to the starting address of the correlated ISR by software. While the starting address is fetched, NVIC will also automatically save processor state including the registers "PC, PSR, LR, R0~R3, R12" to the stack. At the end of the ISR, the NVIC will restore the mentioned registers from stack and resume the normal execution. Thus it will take less and deterministic time to process the interrupt request.

The NVIC supports "Tail Chaining" which handles back-to-back interrupts efficiently without the overhead of states saving and restoration and therefore reduces delay time in switching to pending ISR at the end of current ISR. The NVIC also supports "Late Arrival" which improves the efficiency of concurrent ISRs. When a higher priority interrupt request occurs before the current ISR starts to execute (at the stage of state saving and starting address fetching), the NVIC will give priority to the higher one without delay penalty. Thus it advances the real-time capability.

For more detailed information, please refer to the "Arm® Cortex®-M0 Technical Reference Manual" and "Arm® v6-M Architecture Reference Manual".

6.3.13.1 Exception Model and System Interrupt Map

Table 6.3-8 lists the exception model supported by the M031/M032 series. Software can set four levels of priority on some of these exceptions as well as on all interrupts. The highest user-configurable priority is denoted as "0" and the lowest priority is denoted as "3". The default priority of all the user-configurable interrupts is "0". Note that priority "0" is treated as the fourth priority on the system, after three system exceptions "Reset", "NMI" and "Hard Fault".

Exception Name	Vector Number	Priority
Reset	1	-3
NMI	2	-2
Hard Fault	3	-1
Reserved	4 ~ 10	Reserved
SVCall	11	Configurable
Reserved	12 ~ 13	Reserved
PendSV	14	Configurable

SysTick	15	Configurable
Interrupt (IRQ0 ~ IRQ31)	16 ~ 47	Configurable

Table 6.3-8 Exception Model

Vector Number	Interrupt Number (Bit In Interrupt Registers)	Interrupt Name	Interrupt Description
0 ~ 15	-	-	System exceptions
16	0	BODOUT	Brown-Out low voltage detected interrupt
17	1	WDT_INT	Watchdog Timer interrupt
18	2	EINT024	External interrupt fromEINT0,2,4.
19	3	EINT135	External interrupt fromEINT1.3.5
20	4	GPABGH_INT	External interrupt from PA, PB, PG, PH pin
21	5	GPCDEF_INT	External interrupt from PC, PD, PE, PF pin
22	6	PWM0_INT	PWM0 interrupt
23	7	PWM1_INT	PWM1 interrupt
24	8	TMR0_INT	Timer 0 interrupt
25	9	TMR1_INT	Timer 1 interrupt
26	10	TMR2_INT	Timer 2 interrupt
27	11	TMR3_INT	Timer 3 interrupt
28	12	UART02_INT	UART0,2 interrupt
29	13	UART13_INT	UART1,3 interrupt
30	14	SPI0_INT	SPI0 interrupt
31	15	QSPI0_INT	QSPI0 interrupt
32	16	Reserved	Reserved
33	17	UART57_INT	UART5,7 interrupt
34	18	I2C0_INT	I2C0 interrupt
35	19	I2C1_INT	I2C1 interrupt
36	20	BPWM0_INT	BPWM0 interrupt
37	21	BPWM1_INT	BPWM1 interrupt
38	22	USCI01	USCI0,1 interrupt
39	23	USBD_INT	USB device interrupt
40	24	Reserved	Reserved
41	25	ACMP01_INT	ACMP0 and ACMP1 interrupt
42	26	PDMA_INT	PDMA interrupt
43	27	UART46_INT	UART4,6 interrupt

44	28	PWRWU_INT	Clock controller interrupt for chip wake-up from power-down state
45	29	ADC_INT	ADC interrupt
46	30	CLKFAIL	Clock fail detected or IRC Auto Trim interrupt or SRAM parity check error interrupt
47	31	RTC_INT	RTC interrupt

Table 6.3-9 Interrupt Number Table

6.3.13.2 Vector Table

When an interrupt is accepted, the processor will automatically fetch the starting address of the interrupt service routine (ISR) from a vector table in memory. For Armv6-M, the vector table base address is fixed at 0x00000000. The vector table contains the initialization value for the stack pointer on reset, and the entry point addresses for all exception handlers. The vector number on previous page defines the order of entries in the vector table associated with exception handler entry as illustrated in previous section.

Vector Table Word Offset	Description
0	SP_main – The Main stack pointer
Vector Number	Exception Entry Pointer using that Vector Number

Table 7.2-10 Vector Figure Format

6.3.13.3 Operation Description

NVIC interrupts can be enabled and disabled by writing to their corresponding Interrupt Set-Enable or Interrupt Clear-Enable register bit-field. The registers use a write-1-to-enable and write-1-to-clear policy, both registers reading back the current enabled state of the corresponding interrupts. When an interrupt is disabled, interrupt assertion will cause the interrupt to become Pending, however, the interrupt will not be activated. If an interrupt is Active when it is disabled, it remains in its Active state until cleared by reset or an exception return. Clearing the enable bit prevents new activations of the associated interrupt.

NVIC interrupts can be pended/un-pended using a complementary pair of registers to those used to enable/disable the interrupts, named the Set-Pending Register and Clear-Pending Register respectively. The registers use a write-1-to-enable and write-1-to-clear policy, both registers reading back the current pended state of the corresponding interrupts. The Clear-Pending Register has no effect on the execution status of an Active interrupt.

NVIC interrupts are prioritized by updating an 8-bit field within a 32-bit register (each register supporting four interrupts).

The general registers associated with the NVIC are all accessible from a block of memory in the System Control Space and will be described in next section.

6.4 Flash Memory Controller (FMC)

6.4.1 Overview

This chip is equipped with 16/32/64/128/256/512 Kbytes on-chip embedded Flash (the chip with 512 Kbytes consists of two 256 Kbytes BANK0 and BANK1). A User Configuration block is provided for system initialization. A loader ROM (LDROM) is used for In-System-Programming (ISP) function. A security protection ROM (SPROM) can conceal user program. For M031xG/I and M032xG/I, a 4 Kbytes cache with zero wait cycle is implemented to improve the performance of code/data fetching. This chip also supports In-Application-Programming (IAP) function. User switches the code executing without the chip reset after the embedded Flash is updated.

6.5 General Purpose I/O (GPIO)

6.5.1 Overview

This chip has up to 111 General Purpose I/O pins to be shared with other function pins depending on the chip configuration. These 111 pins are arranged in 5 ports named as PA, PB, PC, PD, PE, PF, PG and PH. PA and PB has 16 pins on port. PC has 15 pins on port. PD and PE has 16 pins on port. PF has 14 pins on port. PG has 10 pins on port. PH has 8 pins on port. Each of the 111 pins is independent and has the corresponding register bits to control the pin mode function and data.

The I/O type of each of I/O pins can be configured by software individually as Input, Push-pull output, Open-drain output or Quasi-bidirectional mode. After the chip is reset, the I/O mode of all pins are depending on CIOINI (CONFIG0[10]).

6.5.2 Features

- Four I/O modes:
  - Quasi-bidirectional mode
  - Push-Pull Output mode
  - Open-Drain Output mode
  - Input only with high impendence mode
- I/O pin can be configured as interrupt source with edge/level setting
- Input schmitt trigger function
- Configurable default I/O mode of all pins after reset by CIOINI (CONFIG0[10]) setting
  - CIOINI = 0, all GPIO pins in Quasi-bidirectional mode after chip reset
  - CIOINI = 1, all GPIO pins in input mode after chip reset
- I/O pin internal pull-up resistor enabled only in Quasi-bidirectional I/O mode
- Enabling the pin interrupt function will also enable the wake-up function

6.6 PDMA Controller (PDMA)

6.6.1 Overview

The peripheral direct memory access (PDMA) controller is used to provide high-speed data transfer. The PDMA controller can transfer data from one address to another without CPU intervention. This has the benefit of reducing the workload of CPU and keeps CPU resources free for other applications. The PDMA controller has a total of 9 channels and each channel can perform transfer between memory and peripherals or between memory and memory.

6.6.2 Features

- Supports 9 independently configurable channels
- Selectable 2 level of priority (fixed priority or round-robin priority)
- Supports transfer data width of 8, 16, and 32 bits
- Supports source and destination address increment size can be byte, half-word, word or no increment
- Supports software and I^2C, SPI/I^2S, UART, USCI, ADC, PWM , QSPI and TIMER request
- Supports Scatter-Gather mode to perform sophisticated transfer through the use of the descriptor link list table
- Supports single and burst transfer type
- Supports time-out function on channel 0 and channel1

6.7 Timer Controller (TMR)

6.7.1 Overview

The timer controller includes four 32-bit timers, Timer0 ~ Timer3, allowing user to easily implement a timer control for applications. The timer can perform functions, such as frequency measurement, delay timing, clock generation, and event counting by external input pins, and interval measurement by external capture pins.

6.7.2 Features

6.7.2.1 Timer Function Features

- Four sets of 32-bit timers, each timer having one 24-bit up counter and one 8-bit prescale counter
- Independent clock source for each timer
- Provides one-shot, periodic, toggle-output and continuous counting operation modes
- 24-bit up counter value is readable through CNT (TIMERx_CNT[23:0])
- Supports event counting function
- Supports event counting source from internal USB SOF signal
- 24-bit capture value is readable through CAPDAT (TIMERx_CAP[23:0])
- Supports external capture pin event for interval measurement
- Supports external capture pin event to reset 24-bit up counter
- Supports internal capture triggered while internal ACMP output signal and LIRC transition
- Supports chip wake-up from Idle/Power-down mode if a timer interrupt signal is generated
- Support Timer0 ~ Timer3 time-out interrupt signal or capture interrupt signal to trigger PWM, ADC, PDMA, BPWM function
- Supports Inter-Timer trigger mode

6.8 Watchdog Timer (WDT)

6.8.1 Overview

The Watchdog Timer (WDT) is used to perform a system reset when system runs into an unknown state. This prevents system from hanging for an infinite period of time. Besides, this Watchdog Timer supports the function to wake up system from Idle/Power-down mode.

6.8.2 Features

- 20-bit free running up counter for WDT time-out interval
- Selectable time-out interval (2^4 ~ 2^{20}) and the time-out interval is 416us ~ 27.3 s if WDT_CLK = 38.4 kHz (LIRC).
- System kept in reset state for a period of (1 / WDT_CLK) * 63
- Supports selectable WDT reset delay period, including 1026、130、18 or 3 WDT_CLK reset delay period
- Supports to force WDT enabled after chip powered on or reset by setting CWDTEN[2:0] in Config0 register
- Supports WDT time-out wake-up function only if WDT clock source is selected as LIRC or LXT.

6.9 Window Watchdog Timer (WWDT)

6.9.1 Overview

The Window Watchdog Timer (WWDT) is used to perform a system reset within a specified window period to prevent software run to uncontrollable status by any unpredictable condition.

6.9.2 Features

- 6-bit down counter value (CNTDAT, WWDT_CNT[5:0]) and 6-bit compare value (CMPDAT, WWDT_CTL[21:16]) to make the WWDT time-out window period flexible
- Supports 4-bit value (PSCSEL, WWDT_CTL[11:8]) to programmable maximum 11-bit prescale counter period of WWDT counter
- WWDT counter suspends in Idle/Power-down mode

6.10 Real Time Clock (RTC)

6.10.1 Overview

The Real Time Clock (RTC) controller provides the real time and calendar message. The RTC offers programmable time tick and alarm match interrupts. The data format of time and calendar messages are expressed in BCD format. A digital frequency compensation feature is available to compensate external crystal oscillator frequency accuracy.

6.10.2 Features

- Supports real time counter in RTC_TIME (hour, minute, second) and calendar counter in RTC_CAL (year, month, day) for RTC time and calendar check.
- Supports alarm time (hour, minute, second) and calendar (year, month, day) settings in RTC_TALM and RTC_CALM.
- Supports alarm time (hour, minute, second) and calendar (year, month, day) mask enable in RTC_TAMSK and RTC_CAMSK.
- Selectable 12-hour or 24-hour time scale in RTC_CLKFMT register.
- Supports Leap Year indication in RTC_LEAPYEAR register.
- Supports Day of the Week counter in RTC_WEEKDAY register.
- Frequency of RTC clock source compensate by RTC_FREQADJ register.
- All time and calendar message expressed in BCD format.
- Supports periodic RTC Time Tick interrupt with 8 period interval options 1/128, 1/64, 1/32, 1/16, 1/8, 1/4, 1/2 and 1 second.
- Supports RTC Time Tick and Alarm Match interrupt.
- Supports 1 Hz clock output.
- Supports chip wake-up from Idle or Power-down mode while a RTC interrupt signal is generated.

6.11 Basic PWM Generator and Capture Timer (BPWM)

6.11.1 Overview

The chip provides two BPWM generators — BPWM0 and BPWM1 as shown in BPWM Generator Overview Block Diagram. Each BPWM supports 6 channels of BPWM output or input capture. There is a 12-bit prescaler to support flexible clock to the 16-bit BPWM counter with 16-bit comparator. The BPWM counter supports up, down and up-down counter types, all 6 channels share one counter. BPWM uses the comparator compared with counter to generate events. These events are used to generate BPWM pulse, interrupt and trigger signal for ADC to start conversion. For BPWM output control unit, it supports polarity output, independent pin mask and tri-state output enable.

The BPWM generator also supports input capture function to latch BPWM counter value to corresponding register when input channel has a rising transition, falling transition or both transition is happened.

6.11.2 Features

6.11.2.1 BPWM Function Features

- Supports maximum clock frequency up to 144 MHz.
- Supports up to two BPWM modules; each module provides 6 output channels
- Supports independent mode for BPWM output/Capture input channel
- Supports 12-bit prescalar from 1 to 4096
- Supports 16-bit resolution BPWM counter; each module provides 1 BPWM counter
  - Up, down and up/down counter operation type
- Supports mask function and tri-state enable for each BPWM pin
- Supports interrupt in the following events:
  - BPWM counter matches 0, period value or compared value
- Supports trigger ADC in the following events:
  - BPWM counter matches 0, period value or compared value

6.11.2.2 Capture Function Features

- Supports up to 12 capture input channels with 16-bit resolution
- Supports rising or falling capture condition
- Supports input rising/falling capture interrupt
- Supports rising/falling capture with counter reload option

6.12 PWM Generator and Capture Timer (PWM)

6.12.1 Overview

The chip provides two PWM generators — PWM0 and PWM1. Each PWM supports 6 channels of PWM output or input capture. There is a 12-bit prescaler to support flexible clock to the 16-bit PWM counter with 16-bit comparator. The PWM counter supports up, down and up-down counter types. PWM uses comparator compared with counter to generate events. These events use to generate PWM pulse, interrupt and trigger signal for ADC to start conversion.

The PWM generator supports two standard PWM output modes: Independent mode and Complementary mode, they have difference architecture. In Complementary mode, there are two comparators to generate various PWM pulse with 12-bit dead-time generator. For PWM output control unit, it supports polarity output, independent pin mask and brake functions.

The PWM generator also supports input capture function to latch PWM counter value to the corresponding register when input channel has a rising transition, falling transition or both transition is happened. Capture function also support PDMA to transfer captured data to memory.

6.12.2 Features

6.12.2.1 PWM Function Features

- Supports maximum clock frequency up to 144 MHz
- Supports up to two PWM modules, each module provides 6 output channels
- Supports independent mode for PWM output/Capture input channel
- Supports complementary mode for 3 complementary paired PWM output channel
  - Dead-time insertion with 12-bit resolution
  - Two compared values during one period
- Supports 12-bit prescaler from 1 to 4096
- Supports 16-bit resolution PWM counter
  - Up, down and up-down counter operation type
- Supports mask function and tri-state enable for each PWM pin
- Supports brake function
  - Brake source from pin and system safety events (clock failed, Brown-out detection, SRAM parity error and CPU lockup)
  - Noise filter for brake source from pin
  - Edge detect brake source to control brake state until brake interrupt cleared
  - Level detect brake source to auto recover function after brake condition removed
- Supports interrupt on the following events:
  - PWM counter matches 0, period value or compared value
  - Brake condition happened
- Supports trigger ADC on the following events:
  - PWM counter matches 0, period value or compared value

6.12.2.2 Capture Function Features

- Supports up to 12 capture input channels with 16-bit resolution

- Supports rising or falling capture condition
- Supports input rising/falling capture interrupt
- Supports rising/falling capture with counter reload option
- Supports PDMA transfer function for PWM all channels

6.13 UART Interface Controller (UART)

6.13.1 Overview

The chip provides eight channels of Universal Asynchronous Receiver/Transmitters (UART). The UART controller performs Normal Speed UART and supports flow control function. The UART controller performs a serial-to-parallel conversion on data received from the peripheral and a parallel-to-serial conversion on data transmitted from the CPU. Each UART controller channel supports ten types of interrupts. The UART controller also supports IrDA SIR, RS-485 and Single-wire function modes and auto-baud rate measuring function.

6.13.2 Features

- Full-duplex asynchronous communications
- Separates receive and transmit 16/16 bytes or 1/1 byte entry FIFO for data payloads
- Supports hardware auto-flow control
- Programmable receiver buffer trigger level
- Supports programmable baud rate generator for each channel individually
- Supports nCTS, incoming data, Received Data FIFO reached threshold and RS-485 Address Match (AAD mode) wake-up function (Only UART0 /UART1 /UART4 /UART5 with Received Data FIFO reached threshold and RS-485 Address Match (AAD mode) wake-up function)
- Supports 8-bit receiver buffer time-out detection function
- Programmable transmitting data delay time between the last stop and the next start bit by setting DLY (UART_TOUT [15:8])
- Supports Auto-Baud Rate measurement and baud rate compensation function
  - Support 9600 bps for UART_CLK is selected LXT. (Only UART0 /UART1 /UART4 /UART5 with this feature)
- Supports break error, frame error, parity error and receive/transmit buffer overflow detection function
- Fully programmable serial-interface characteristics
  - Programmable number of data bit, 5-, 6-, 7-, 8- bit character
  - Programmable parity bit, even, odd, no parity or stick parity bit generation and detection
  - Programmable stop bit, 1, 1.5, or 2 stop bit generation
- Supports IrDA SIR function mode
  - Supports for 3/16 bit duration for normal mode
- Supports RS-485 function mode
  - Supports RS-485 9-bit mode
  - Supports hardware or software enables to program nRTS pin to control RS-485 transmission direction
- Supports PDMA transfer function
- Support Single-wire function mode.

UART Feature	UART0/ UART1/ UART4/ UART5	UART2/ UART3/ UART6/ UART7	USCI-UART

FIFO	16 Bytes	1 Bytes	TX: 1byte RX: 2byte
Auto Flow Control (CTS/RTS)	√	√	√
IrDA	√	√	-
LIN	-	-	-
RS-485 Function Mode	√	√	√
nCTS Wake-up	√	√	√
Incoming Data Wake-up	√	√	√
Received Data FIFO reached threshold Wake-up	√	-	-
RS-485 Address Match (AAD mode) Wake-up	√	-	-
Auto-Baud Rate Measurement	√	√	√
STOP Bit Length	1, 1.5, 2 bit	1, 1.5, 2 bit	1, 2 bit
Word Length	5, 6, 7, 8 bits	5, 6, 7, 8 bits	6~13 bits
Even / Odd Parity	√	√	√
Stick Bit	√	√	-
Note: √= Supported			

Table 6.13-1 NuMicro® M031/M032 Series UART Features

6.14 Serial Peripheral Interface (SPI)

6.14.1 Overview

The Serial Peripheral Interface (SPI) applies to synchronous serial data communication and allows full duplex transfer. Devices communicate in Master/Slave mode with the 4-wire bi-direction interface. The chip contains one set of SPI controller performing a serial-to-parallel conversion on data received from a peripheral device, and a parallel-to-serial conversion on data transmitted to a peripheral device. Each SPI controller can be configured as a master or a slave device and supports the PDMA function to access the data buffer. Each SPI controller also supports I^2S mode to connect external audio CODEC.

6.14.2 Features

- SPI Mode
  - Supports one set of SPI controller
  - Supports Master or Slave mode operation
  - Configurable bit length of a transaction word from 8 to 32-bit
  - Provides separate 4-level of 32-bit (or 8-level of 16-bit) transmit and receive FIFO buffers which depends on SPI setting of data width
  - Supports MSB first or LSB first transfer sequence
  - Supports Byte Reorder function
  - Supports Byte or Word Suspend mode
  - Master mode up to 24 MHz and Slave mode up to 16 MHz (when chip works at V_{DD} = 1.8~3.6V)
  - Supports one data channel half-duplex transfer
  - Supports receive-only mode
  - Supports PDMA transfer
- I^2S Mode
  - Supports one set of I^2S by SPI controller
  - Interface with external audio CODEC
  - Supports Master or Slave mode
  - Capable of handling 8-, 16-, 24- and 32-bit word sizes
  - Supports monaural and stereo audio data
  - Supports PCM mode A, PCM mode B, I^2S and MSB justified data format
  - Each provides two 4-level FIFO data buffers, one for transmitting and the other for receiving
  - Supports two PDMA requests, one for transmitting and the other for receiving
  - Generates interrupt requests when buffer levels cross a programmable boundary

6.15 Quad Serial Peripheral Interface (QSPI)

6.15.1 Overview

The Quad Serial Peripheral Interface (QSPI) applies to synchronous serial data communication and allows full duplex transfer. Devices communicate in Master/Slave mode with the 4-wire bi-direction interface. The chip contains one QSPI controller performing a serial-to-parallel conversion on data received from a peripheral device, and a parallel-to-serial conversion on data transmitted to a peripheral device.

The QSPI controller supports 2-bit Transfer mode to perform full-duplex 2-bit data transfer and also supports Dual and Quad I/O Transfer mode and the controller supports the PDMA function to access the data buffer.

6.15.2 Features

- Supports one QSPI controller
- Supports Master or Slave mode operation
- Master mode up to 24 MHz and Slave mode up to 16 MHz (when chip works at V_{DD} = 1.8~3.6V)
- Supports 2-bit Transfer mode
- Supports Dual and Quad I/O Transfer mode
- Configurable bit length of a transaction word from 8 to 32-bit
- Provides separate 8-level depth transmit and receive FIFO buffers
- Supports MSB first or LSB first transfer sequence
- Supports Byte Reorder function
- Supports Byte or Word Suspend mode
- Supports PDMA transfer
- Supports 3-Wire, no slave selection signal, bi-direction interface
- Supports one data channel half-duplex transfer
- Supports receive-only mode

6.16 I²C Serial Interface Controller (I²C)

6.16.1 Overview

I²C is a two-wire, bi-directional serial bus that provides a simple and efficient method of data exchange between devices. The I²C standard is a true multi-master bus including collision detection and arbitration that prevents data corruption if two or more masters attempt to control the bus simultaneously.

There are two sets of I²C controllers which support Power-down wake-up function.

6.16.2 Features

The I²C bus uses two wires (SDA and SCL) to transfer information between devices connected to the bus. The main features of the I²C bus include:

- Supports up to two I²C ports
- Master/Slave mode
- Bidirectional data transfer between masters and slaves
- Multi-master bus (no central master)
- Supports Standard mode (100 kbps), Fast mode (400 kbps) and Fast mode plus (1 Mbps)
- Arbitration between simultaneously transmitting masters without corruption of serial data on the bus
- Serial clock synchronization allow devices with different bit rates to communicate via one serial bus
- Built-in 14-bit time-out counter requesting the I²C interrupt if the I²C bus hangs up and timer-out counter overflow
- Programmable clocks allow for versatile rate control
- Supports 7-bit addressing
- Supports multiple address recognition (four slave address with mask option)
- Supports Power-down wake-up function
- Supports PDMA with one buffer capability
- Supports setup/hold time programmable
- Supports Bus Management (SM/PM compatible) function

Section	Sub-Section	M031xB/C/D/E M032xB/C/D/E	M031xG/I M032xG/I
6.16.5 Functional Description	6.16.5.2 Operation Modes - Bus Management (SMBus/PMBus Compatiable) - Device Identification – Slave Address - Bus Protocols - Address Resolution Protocol (ARP) - Received Command and Data acknowledge control - Host Notify Protocol		●

	- Bus Management Alert - Packet Error Checking - Time-out - Bus Management Time-out: - Bus Clock Low Time-out: - Bus Idle Detection		
Register Description	I2C Bus Manage Control Register (I2C_BUSCTL)		●
	I2C Bus Management Timer Control Register (I2C_BUSTCTL)		●
	I2C Bus Management Status Register (I2C_BUSSTS)		●
	I2C Byte Number Register (I2C_PKTSIZE)		●
	I2C PEC Value Register (I2C_PKTCRC)		●
	I2C Bus Management Timer Register (I2C_BUSTOUT)		●
	I2C Clock Low Timer Register (I2C_CLKTOUT)		●

Table 6.16-1 I^2C Feature Comparison Table at Different Chip

6.17 USCI - Universal Serial Control Interface Controller (USCI)

6.17.1 Overview

The Universal Serial Control Interface (USCI) is a flexible interface module covering several serial communication protocols. The user can configure this controller as UART, SPI, or I^2C functional protocol.

6.17.2 Features

The controller can be individually configured to match the application needs. The following protocols are supported:

- UART
- SPI
- I^2C

6.18 USCI – UART Mode

6.18.1 Overview

The asynchronous serial channel UART covers the reception and the transmission of asynchronous data frames. It performs a serial-to-parallel conversion on data received from the peripheral, and a parallel-to-serial conversion on data transmitted from the controller. The receiver and transmitter being independent, frames can start at different points in time for transmission and reception.

The UART controller also provides auto flow control. There are two conditions to wake-up the system.

6.18.2 Features

- Supports one transmit buffer and two receive buffer for data payload
- Supports hardware auto flow control function
- Supports programmable baud-rate generator
- Support 9-bit Data Transfer (Support 9-bit RS-485)
- Baud rate detection possible by built-in capture event of baud rate generator
- Supports PDMA capability
- Supports Wake-up function (Data and nCTS Wakeup Only)

6.19 USCI - SPI Mode

6.19.1 Overview

The SPI protocol of USCI controller applies to synchronous serial data communication and allows full duplex transfer. It supports both master and Slave operation mode with the 4-wire bi-direction interface. SPI mode of USCI controller performs a serial-to-parallel conversion on data received from a peripheral device, and a parallel-to-serial conversion on data transmitted to a peripheral device. The SPI mode is selected by FUNMODE (USPI_CTL[2:0]) = 0x1

This SPI protocol can operate as Master or Slave mode by setting the SLAVE (USPI_PROTCTL[0]) to communicate with the off-chip SPI Slave or master device. The application block diagrams in Master and Slave mode are shown below.

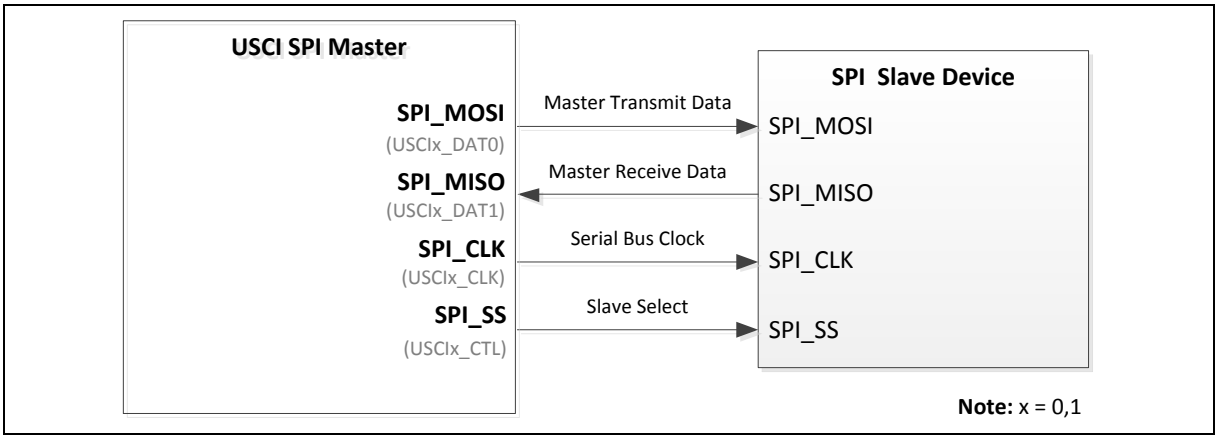

Figure 6.19-1 SPI Master Mode Application Block Diagram

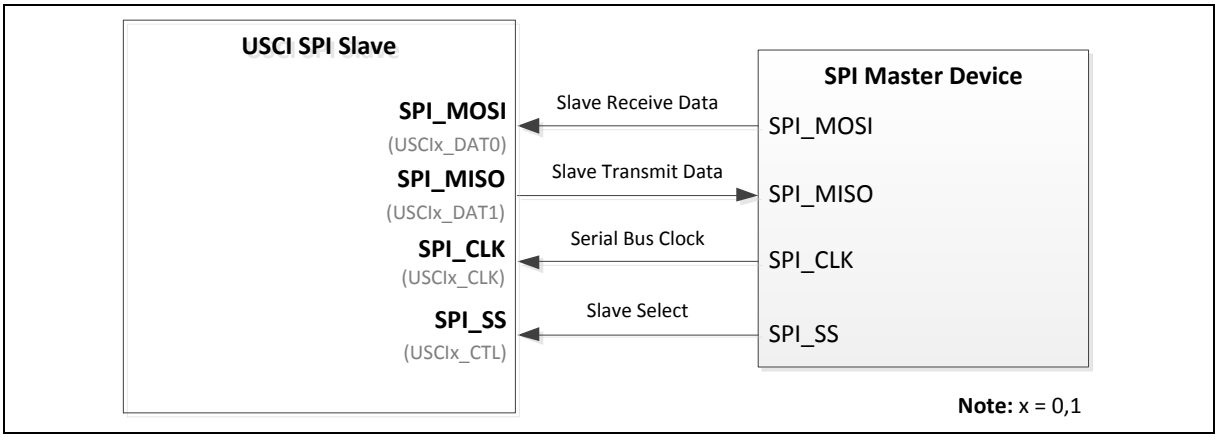

Figure 6.19-2 SPI Slave Mode Application Block Diagram

6.19.2 Features

- Supports Master or Slave mode operation (the maximum frequency -- Master = f_{PCLK} / 2, Slave < f_{PCLK} / 5)
- Configurable bit length of a transfer word from 4 to 16-bit
- Supports one transmit buffer and two receive buffers for data payload
- Supports MSB first or LSB first transfer sequence

- Supports Word Suspend function
- Supports PDMA transfer
- Supports 3-wire, no slave select signal, bi-direction interface
- Supports wake-up function by slave select signal in Slave mode
- Supports one data channel half-duplex transfer

6.20 USCI - I²C Mode

6.20.1 Overview

On I²C bus, data is transferred between a Master and a Slave. Data bits transfer on the SCL and SDA lines are synchronously on a byte-by-byte basis. Each data byte is 8-bit. There is one SCL clock pulse for each data bit with the MSB being transmitted first, and an acknowledge bit follows each transferred byte. Each bit is sampled during the high period of SCL; therefore, the SDA line may be changed only during the low period of SCL and must be held stable during the high period of SCL. A transition on the SDA line while SCL is high is interpreted as a command (START or STOP). Please refer to Figure 6.20-1 for more detailed I²C BUS Timing.

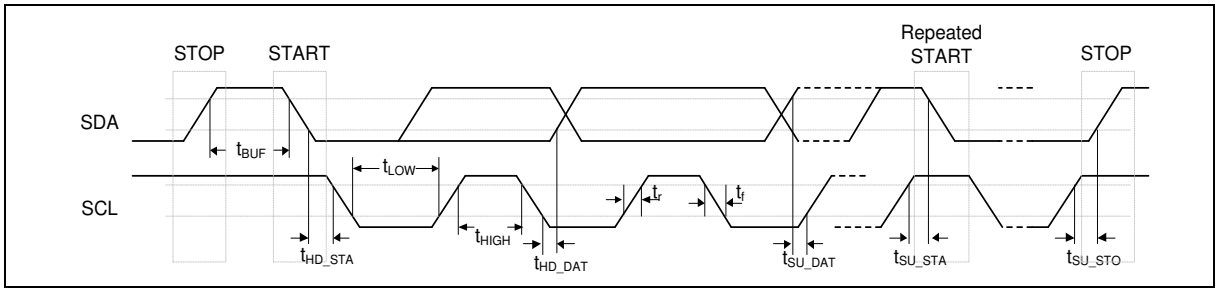

Figure 6.20-1 I²C Bus Timing

The device's on-chip I²C provides the serial interface that meets the I²C bus standard mode specification. The I²C port handles byte transfers autonomously. The I²C mode is selected by FUNMODE (UI2C_CTL [2:0]) = 100B. When enable this port, the USCI interfaces to the I²C bus via two pins: SDA and SCL. When I/O pins are used as I²C ports, user must set the pins function to I²C in advance.

Note: Pull-up resistor is needed for I²C operation because the SDA and SCL are set to open-drain pins when USCI is selected to I²C operation mode .

6.20.2 Features

- Full master and slave device capability
- Supports of 7-bit addressing, as well as 10-bit addressing
- Communication in standard mode (100 kBit/s) or in fast mode (up to 400 kBit/s)
- Supports multi-master bus
- Supports one transmit buffer and two receive buffer for data payload
- Supports 10-bit bus time-out capability
- Supports bus monitor mode.
- Supports Power down wake-up by received 'START' symbol or address match
- Supports setup/hold time programmable
- Supports multiple address recognition (two slave address with mask option)

6.21 External Bus Interface (EBI)

6.21.1 Overview

This chip is equipped with an external bus interface (EBI) for external device use. To save the connections between an external device and a chip, EBI is operating at address bus and data bus multiplex mode. The EBI supports two chip selects that can connect two external devices with different timing setting requirements.

6.21.2 Features

- Supports up to two memory banks
- Supports dedicated external chip select pin with polarity control for each bank
- Supports accessible space up to 1 Mbytes for each bank, actually external addressable space is dependent on package pin out
- Supports 8-/16-bit data width
- Supports byte write in 16-bit data width mode
- Supports Address/Data multiplexed Mode
- Supports Timing parameters individual adjustment for each memory block
- Supports LCD interface i80 mode
- Supports PDMA mode
- Supports variable external bus base clock (MCLK) which based on HCLK
- Supports configurable idle cycle for different access condition: Idle of Write command finish (W2X) and Idle of Read-to-Read (R2R)
- Supports address bus and data bus separate mode

		M031xB/C/D/E	M031xG/I
	M032xC/D	M032xE	M032xG/I
6.21.5.3 EBI Data Width Connection - Address Bus and Data Bus Separate Mode			●
6.21.5.4 EBI Operating Control - Continuous Data Access Mode			●

Table 6.21-1 EBI Features Comparison Table

6.22 USB 2.0 Full-Speed Device Controller (USBD)

6.22.1 Overview

There is one set of USB 2.0 full-speed device controller and transceiver in this device. It is compliant with USB 2.0 full-speed device specification and supports control/bulk/interrupt/ isochronous transfer types.

In this device controller, there are two main interfaces: the APB bus and USB bus which comes from the USB PHY transceiver. For the APB bus, the CPU can program control registers through it. There are 512 Bytes internal SRAM as data buffer in this controller. For IN or OUT transfer, it is necessary to write data to SRAM or read data from SRAM through the APB interface or SIE. User needs to set the effective starting address of SRAM for each endpoint buffer through buffer segmentation register (USBD_BUFSEGx).

There are 8 endpoints in this controller. Each of the endpoint can be configured as IN or OUT endpoint. All the operations including Control, Bulk, Interrupt and Isochronous transfer are implemented in this block. The block of “Endpoint Control” is also used to manage the data sequential synchronization, endpoint states, current start address, transaction status, and data buffer status for each endpoint.

There are four different interrupt events in this controller. They are the no-event-wake-up, device plug-in or plug-out event, USB events, like IN ACK, OUT ACK etc, and BUS events, like suspend and resume, etc. Any event will cause an interrupt, and users just need to check the related event flags in interrupt event status register (USBD_INTSTS) to acknowledge what kind of interrupt occurring, and then check the related USB Endpoint Status Register USBD_EPSTS0 to acknowledge what kind of event occurring in this endpoint.

A software-disconnect function is also supported for this USB controller. It is used to simulate the disconnection of this device from the host. If user enables SE0 bit (USBD_SE0), the USB controller will force the output of USB_D+ and USB_D- to level low and its function is disabled. After disable the SE0 bit, host will enumerate the USB device again.

For more information on the Universal Serial Bus, please refer to Universal Serial Bus Specification Revision *2.0.*

6.22.2 Features

- Compliant with USB 2.0 Full-Speed specification
- Provides 1 interrupt vector with 5 different interrupt events (SOF, NEVWK, VBUSDET, USB and BUS)
- Supports Control/Bulk/Interrupt/Isochronous transfer type
- Supports suspend function when no bus activity existing for 3 ms
- Supports 8 endpoints for configurable Control/Bulk/Interrupt/Isochronous transfer types and maximum 512 byte buffer size
- Provides remote wake-up capability

Section	-	M031xB/C/D/E	M031xG/I
	M032xC/D	M032xE	M032xG/I
6.22.7 Register Description USB Configuration Register (USB_CFGx) DSQSYNC OUT Token Transaction	•	-	-

6.23 CRC Controller (CRC)

6.23.1 Overview

The Cyclic Redundancy Check (CRC) generator can perform CRC calculation with four common polynomials CRC-CCITT, CRC-8, CRC-16, and CRC-32 settings.

6.23.2 Features

- Supports four common polynomials CRC-CCITT, CRC-8, CRC-16, and CRC-32
  - CRC-CCITT: $X^{16} + X^{12} + X^{5} + 1$
  - CRC-8: $X^{8} + X^{2} + X + 1$
  - CRC-16: $X^{16} + X^{15} + X^{2} + 1$
  - CRC-32: $X^{32} + X^{26} + X^{23} + X^{22} + X^{16} + X^{12} + X^{11} + X^{10} + X^{8} + X^{7} + X^{5} + X^{4} + X^{2} + X + 1$
- Programmable seed value
- Supports programmable order reverse setting for input data and CRC checksum
- Supports programmable 1's complement setting for input data and CRC checksum
- Supports 8/16/32-bit of data width
  - 8-bit write mode: 1-AHB clock cycle operation
  - 16-bit write mode: 2-AHB clock cycle operation
  - 32-bit write mode: 4-AHB clock cycle operation
- Supports using PDMA to write data to perform CRC operation

6.24 Hardware Divider (HDIV)

6.24.1 Overview

The hardware divider (HDIV) is useful to the high performance application. The hardware divider is a signed, integer divider with both quotient and remainder outputs.

6.24.2 Features

- Signed (two's complement) integer calculation
- 32-bit dividend with 16-bit divisor calculation capacity
- 32-bit quotient and 32-bit remainder outputs (16-bit remainder with sign extends to 32-bit)
- Divided by zero warning flag
- Write divisor to trigger calculation

6.25 Analog-to-Digital Converter (ADC)

6.25.1 Overview

The ADC contains one 12-bit successive approximation analog-to-digital converter (SAR A/D converter) with 16 input channels. The A/D converter supports four operation modes: Single, Burst, Single-cycle Scan and Continuous Scan mode. The A/D converter can be started by software, external pin (STADC), timer0~3 overflow pulse trigger, PWM trigger or BPWM trigger.

6.25.2 Features

- Operating voltage: 1.8V~3.6V.
- Analog input voltage: 0 ~ AV_{DD}.
- Supports external reference voltage from V_{REF} pin.
- 12-bit resolution and 10-bit accuracy is guaranteed.
- Up to 16 single-end analog input channels or 8 differential analog input channels.
- Maximum ADC peripheral clock frequency is 34 MHz.
- Up to 2 MSPS sampling rate.
- Scan on enabled channels
- Threshold voltage detection
- Four operation modes:
  - Single mode: A/D conversion is performed one time on a specified channel.
  - Burst mode: A/D converter samples and converts the specified single channel and sequentially stores the result in FIFO.
  - Single-cycle Scan mode: A/D conversion is performed only one cycle on all specified channels with the sequence from the smallest numbered channel to the largest numbered channel.
  - Continuous Scan mode: A/D converter continuously performs Single-cycle Scan mode until software stops A/D conversion.
- An A/D conversion can be started by:
  - Software Write 1 to ADST bit
  - External pin (STADC)
  - Timer 0~3 overflow pulse trigger
  - BPWM trigger
  - PWM trigger
- Each conversion result is held in data register of each channel with valid and overrun indicators.
- Conversion result can be compared with specified value and user can select whether to generate an interrupt when conversion result matches the compare register setting.
- Supports extend sample time function (0~255 ADC clock).
- One internal channel from band-gap voltage (V_{BG}).
- One internal channel from internal pull-up/down circuit.
- Supports PDMA transfer mode.

- Supports Calibration mode.
- Supports Floating Detect Function

Note1: ADC sampling rate = (ADC peripheral clock frequency) / (total ADC conversion cycle)

Note2: If the internal channel for band-gap voltage is active, the maximum sampling rate will be 300k SPS.

Note3: The ADC Clock frequency must be slower than or equal to PCLK.

	M032xC/D	M031xB/C/D/E M032x/E	M031xG/I M032xG/I
6.25.5.11 PWM trigger	-	●	●
6.25.5.12 BPWM trigger	●	-	●
6.25.5.17 Floating Detect Function	●	-	●

Table 6.25-1 ADC Features Comparison Table

6.26 Analog Comparator Controller (ACMP)

6.26.1 Overview

The chip provides two comparators. The comparator output is logic 1 when positive input is greater than negative input; otherwise, the output is 0. Each comparator can be configured to generate an interrupt when the comparator output value changes.

6.26.2 Features

- Analog input voltage range: 0 ~ AV_{DD} (voltage of AV_{DD} pin)
- Supports hysteresis function
- Supports wake-up function
- Selectable input sources of positive input and negative input
- ACMP0 supports:
  - 4 multiplexed I/O pins at positive sources:
    - ACMP0_P0, ACMP0_P1, ACMP0_P2, or ACMP0_P3
  - 3 negative sources:
    - ACMP0_N
    - Comparator Reference Voltage (CRV)
    - Internal band-gap voltage (V_{BG})
- ACMP1 supports
  - 4 multiplexed I/O pins at positive sources:
    - ACMP1_P0, ACMP1_P1, ACMP1_P2, or ACMP1_P3
  - 3 negative sources:
    - ACMP1_N
    - Comparator Reference Voltage (CRV)
    - Internal band-gap voltage (V_{BG})
- Shares one ACMP interrupt vector for all comparators
- Interrupts generated when compare results change (Interrupt event condition is programmable)
- Supports triggers for break events and cycle-by-cycle control for PWM
- Supports window compare mode and window latch mode
- Supports calibration function

Section	Sub-Section	M031xB/C/D/E M032xB/C/D/E	M031xG/I M032xG/I
Function Description	6.26.5.7 Calibration function	-/-/-/●	●

Table 6.26-1 Calibration Function Features Comparison Table at Different Chip

6.27 Peripherals Interconnection

6.27.1 Overview

Some peripherals have interconnections which allow autonomous communication or synchronous action between peripherals without needing to involve the CPU. Peripherals interact without CPU saves CPU resources, reduces power consumption, operates with no software latency and fast responds.

6.27.2 Peripherals Interconnect Matrix table

Source	Destination					
	ADC	HIRC TRIM	BPWM	PWM	Timer	UART/USCI
ACMP	-	-	-	3	6	-
BOD	-	-	-	3	-	-
Clock Fail	-	-	-	3	-	-
CPU Lockup	-	-	-	3	-	-
LIRC	-	-	-	-	6	-
HXT	-	-	-	-	-	
LXT	-	2		-	-	
BPWM	1		4	-	-	-
PWM	1	-	4	4	-	8
Timer	1	-	5	5	7	-
USBD	-	2	-	-	-	-

Table 6.27-1 Peripherals Interconnect Matrix table

7 APPLICATION CIRCUIT

7.1 Power Supply Scheme

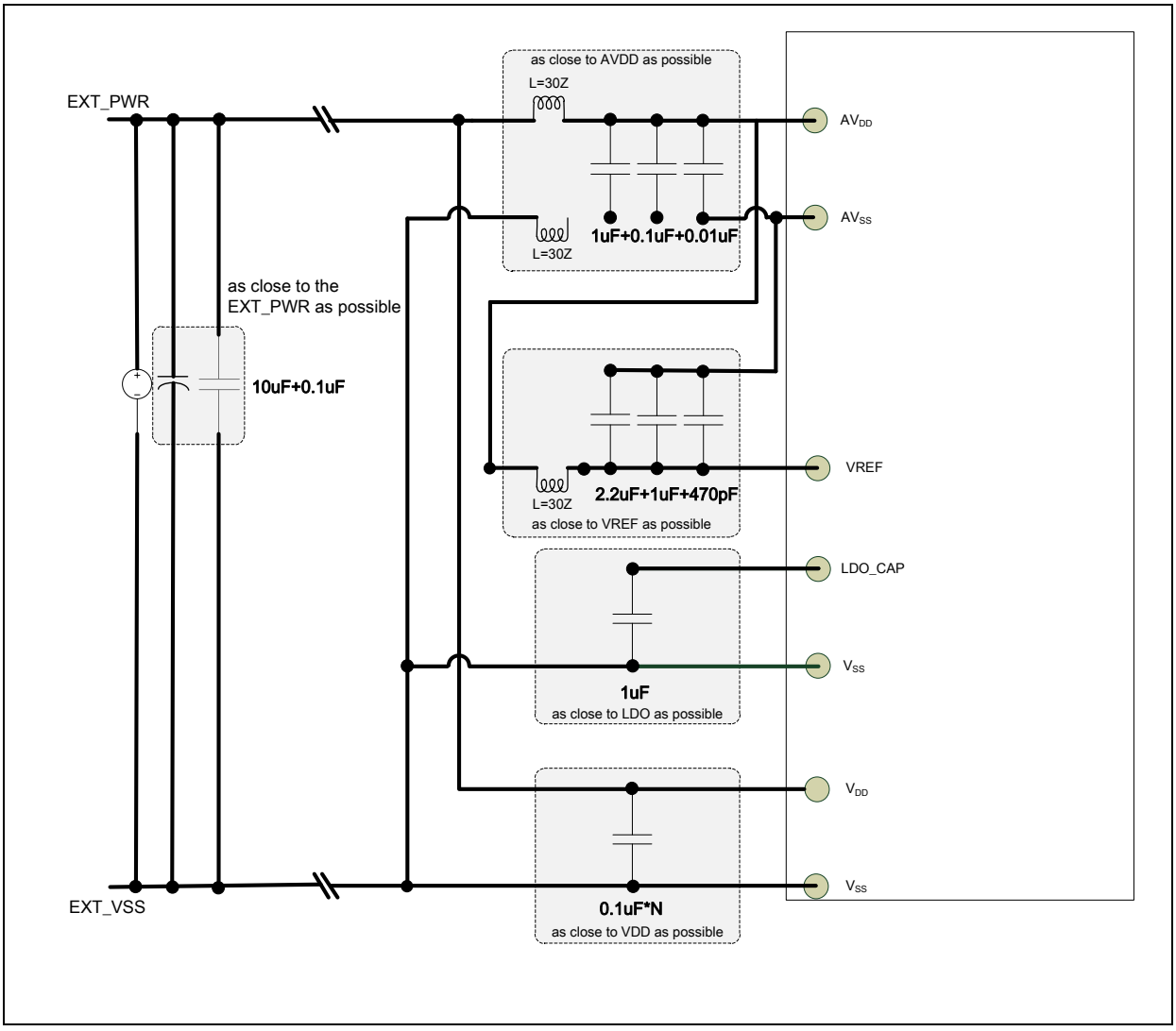

7.2 Peripheral Application Scheme

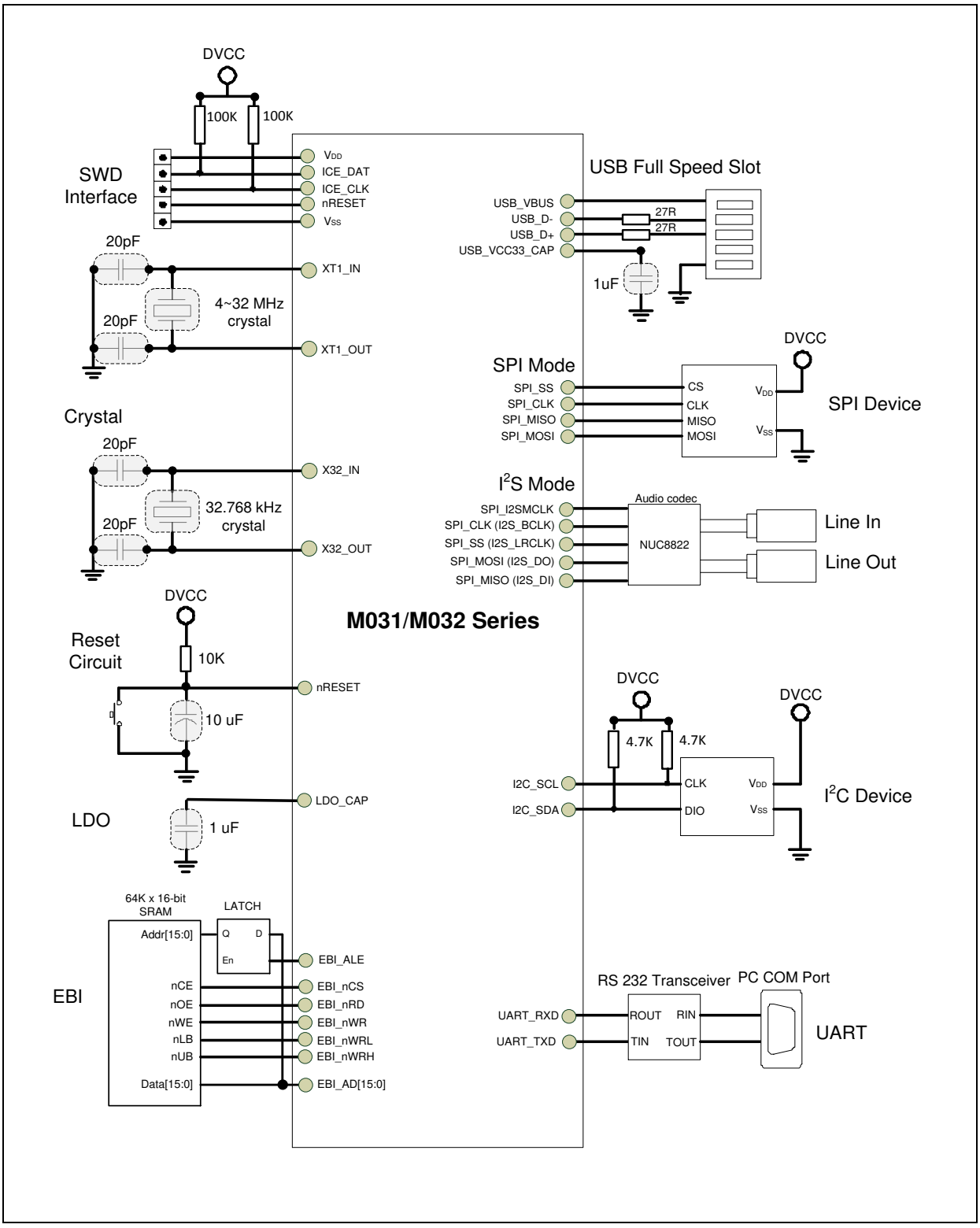

Note 1: It is recommended to use 100 kΩ pull-up resistor on both ICE_DAT and ICE_CLK pin.

Note 2: It is recommended to use 10 kΩ pull-up resistor and 10 uF capacitor on nRESET pin.

8 ELECTRICAL CHARACTERISTICS

8.1 Absolute Maximum Ratings

Stresses above the absolute maximum ratings may cause permanent damage to the device. The limiting values are stress ratings only and cannot be used to functional operation of the device. Exposure to the absolute maximum ratings may affect device reliability and proper operation is not guaranteed.

8.1.1 Voltage Characteristics

Symbol	Description	Min	Max	Unit
V_{DD}-V_{SS}[*1]	DC power supply	-0.3	4.0	V
ΔV_{DD}	Variations between different power pins	-	50	mV
$\|V_{DD} - AV_{DD}\|$	Allowed voltage difference for V_{DD} and AV_{DD}	-	50	mV
ΔV_{SS}	Variations between different ground pins	-	50	mV
$\|V_{SS} - AV_{SS}\|$	Allowed voltage difference for V_{SS} and AV_{SS}	-	50	mV
V_{IN}	Input voltage on 5V-tolerance I/O	V_{SS}-0.3	5.5	V
	Input voltage on any other pin[*2]	V_{SS}-0.3	4.0	V

Note:

1. All main power (V_{DD}, AV_{DD}) and ground (V_{SS}, AV_{SS}) pins must be connected to the external power supply.
2. Non 5V-tolerance I/O includes PA.10 ~ 11; PB.0 ~ 15; PF.2, 3, 4, 5; all USB pin and nRESET pin. V_{IN} maximum value must be respected to avoid permanent damage. Refer to Table 8.1-2 for the values of the maximum allowed injected current

Table 8.1-1 Voltage Characteristics

8.1.2 Current Characteristics

Symbol	Description	Min	Max	Unit
ΣI_{DD}[*1]	Maximum current into V_{DD}	-	150	mA
ΣI_{SS}	Maximum current out of V_{SS}	-	100	
I_{IO}	Maximum current sunk by a I/O Pin	-	20	
	Maximum current sourced by a I/O Pin	-	20	
	Maximum current sunk by total I/O Pins[*2]	-	100	
	Maximum current sourced by total I/O Pins[*2]	-	100	
$I_{INJ(PIN)}$ [*3]	Maximum injected current by a I/O Pin	-	±5	
$\Sigma I_{INJ(PIN)}$ [*3]	Maximum injected current by total I/O Pins	-	±25	

Note:

1. Maximum allowable current is a function of device maximum power dissipation.
2. This current consumption must be correctly distributed over all I/Os and control pins. The total output current must not be sunk/sourced between two consecutive power supply pins.
3. A positive injection is caused by $V_{IN}>A_{VDD}$ and a negative injection is caused by $V_{IN}<V_{SS}$. $I_{INJ(PIN)}$ must never be exceeded. It is recommended to connect an overvoltage protection diode between the analog input pin and the voltage supply pin.

Table 8.1-2 Current Characteristics

8.1.3 Thermal Characteristics

The average junction temperature can be calculated by using the following equation:

$T_J = T_A + (P_D \times \theta_{JA})$

- T_A = ambient temperature (°C)
- θ_{JA} = thermal resistance junction-ambient (°C/Watt)
- P_D = sum of internal and I/O power dissipation

Symbol	Description	Min	Typ	Max	Unit
T_A	Operating ambient temperature	-40	-	105	°C
T_J	Operating junction temperature	-40	-	125	
T_{ST}	Storage temperature	-65	-	150	
θ_{JA}[*1]	Thermal resistance junction-ambient 20-pin TSSOP(4.4x6.5 mm)	-	38	-	°C/Watt
	Thermal resistance junction-ambient 28-pin TSSOP(4.4x9.7 mm)	-	30	-	°C/Watt
	Thermal resistance junction-ambient 33-pin QFN(4x4 mm)	-	28	-	°C/Watt
	Thermal resistance junction-ambient 48-pin LQFP(7x7 mm)	-	60	-	°C/Watt
	Thermal resistance junction-ambient 64-pin LQFP(7x7 mm)	-	58	-	°C/Watt
	Thermal resistance junction-ambient 128-pin LQFP(14x14 mm)	-	38.5	-	°C/Watt

Note:

1. Determined according to JESD51-2 Integrated Circuits Thermal Test Method Environment Conditions

Table 8.1-3 Thermal Characteristics

8.1.4 EMC Characteristics

8.1.4.1 Electrostatic discharge (ESD)

For the Nuvoton MCU products, there are ESD protection circuits which built into chips to avoid any damage that can be caused by typical levels of ESD.

8.1.4.2 Static latchup

Two complementary static tests are required on six parts to assess the latchup

performance:

- A supply overvoltage is applied to each power supply pin
- A current injection is applied to each input, output and configurable I/O pin

8.1.4.3 Electrical fast transients (EFT)

In some application circuit compoment will produce fast and narrow high-frequency trasnients bursts of narrow high-frequency transients on the power distribution system..

- Inductive loads:
  - Relays, switch contactors
  - Heavy-duty motors when de-energized etc.

The fast transient immunity requirements for electronic products are defined in IEC 61000-4-4 by International ElectrotechnicalCommission (IEC).

Symbol	Description	Min	Typ	Max	Unit
V_{HBM}[*1]	Electrostatic discharge,human body mode	-6000	-	+6000	V
V_{CDM}[*2]	Electrostatic discharge,charge device model	-1000	-	+1000	
LU[*3]	Pin current for latch-up[*3]	-400	-	+400	mA
V_{EFT}[*4] [*5]	Fast transient voltage burst	-4.4	-	+4.4	kV

Note:

1. Determined according to ANSI/ESDA/JEDEC JS-001 Standard, Electrostatic Discharge Sensitivity Testing – Human Body Model (HBM) – Component Level
2. Determined according to ANSI/ESDA/JEDEC JS-002 standard for Electrostatic Discharge Sensitivity (ESD) Testing – Charged Device Model (CDM) – Component Level.
3. Determined according to JEDEC EIA/JESD78 standard.
4. Determinded according to IEC 61000-4-4 Electrical fast transient/burst immunity test.
5. The performace cretia class is 4A.

Table 8.1-4 EMC Characteristics for M03xB/M03xC/M03xD/M03xE

Symbol	Description	Min	Typ	Max	Unit
V_{HBM}[*1]	Electrostatic discharge,human body mode	-5000	-	+5000	V
V_{CDM}[*2]	Electrostatic discharge,charge device model	-750	-	+750	
LU[*3]	Pin current for latch-up[*3]	-400	-	+400	mA
V_{EFT}[*4] [*5]	Fast transient voltage burst	-4.4	-	+4.4	kV

Note:

1. Determined according to ANSI/ESDA/JEDEC JS-001 Standard, Electrostatic Discharge Sensitivity Testing – Human Body Model (HBM) – Component Level
2. Determined according to ANSI/ESDA/JEDEC JS-002 standard for Electrostatic Discharge Sensitivity (ESD) Testing – Charged Device Model (CDM) – Component Level.
3. Determined according to JEDEC EIA/JESD78 standard.
4. Determinded according to IEC 61000-4-4 Electrical fast transient/burst immunity test.
5. The performace cretia class is 4A.

Table 8.1-5 EMC Characteristics for M03xG/M03xI

8.1.5 Package Moisture Sensitivity(MSL)

The MSL rating of an IC determines its floor life before the board mounting once its dry bag has been opened. All Nuvoton surface mount chips have a moisture level classification. The information is also displayed on the bag packing.

Pacakge	MSL
20-pin TSSOP(4.4x6.5 mm) [*1]	MSL 3
28-pin TSSOP(4.4x9.7 mm) [*1]	MSL 3
33-pin QFN(4x4 mm) [*1]	MSL 3
48-pin LQFP(7x7 mm) [*1]	MSL 3
64-pin LQFP(7x7 mm) [*1]	MSL 3
128-pin LQFP(14x14 mm) [*1]	MSL 3

Note:

1. Determined according to IPC/JEDEC J-STD-020

Table 8.1-6 Package Moisture Sensitivity (MSL)

8.1.6 Soldering Profile

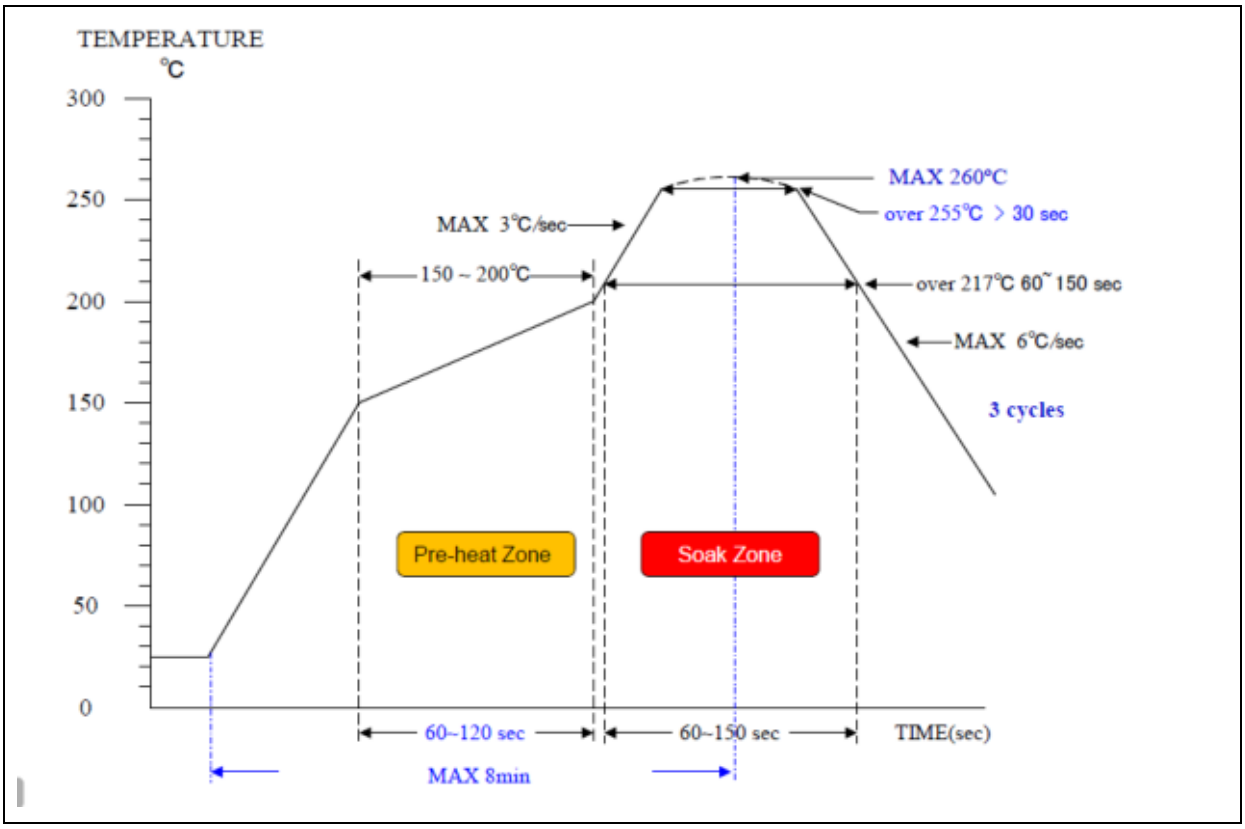

Figure 8.1-1 Soldering Profile from J-STD-020C

Porfile Feature	Pb Free Package
Average ramp-up rate (217°C to peak)	3°C/sec. max
Preheat temperature 150°C ~200°C	60 sec. to 120 sec.
Temperature maintained above 217°C	60 sec. to 150 sec.
Time with 5°C of actual peak temperature	> 30 sec.
Peak temperature range	260°C
Ramp-down rate	6°C/sec ax.
Time 25°C to peak temperature	8 min. max
Note: 1. Determined according to J-STD-020C	

Table 8.1-7 Soldering Profile

8.2 General Operating Conditions

(V_{DD}-V_{SS} = 1.8 ~ 3.6V, T_A = 25°C, HCLK = 48/72 MHz unless otherwise specified.)

Symbol	Parameter	Min	Typ	Max	Unit	Test Conditions
T_A	Temperature	-40	-	105	°C	
f_{HCLK}	Internal AHB clock frequency	-	-	48	MHz	V_{DD} = 1.8 V~3.6V
		-	-	72	MHz	V_{DD} = 2.0 V~3.6V
V_{DD}	Operation voltage	1.8	-	3.6	V	f_{HCLK} up to 48 MHz
		2.0	-	3.6		f_{HCLK} up to 72 MHz
AV_{DD}[*1]	Analog operation voltage	V_{DD}				
V_{REF}	Analog reference voltage	1.8	-	AV_{DD}		AV_{DD} − V_{REF} < 1.2 V
V_{LDO}	LDO output voltage	-	1.8	-		
V_{BG}[*4]	Band-gap voltage	1.16	1.23	1.31		
C_{LDO}[*2]	LDO output capacitor on each pin	1				μF
R_{ESR}[*3]	ESR of C_{LDO} output capacitor	0.1	-	10	Ω	
I_{RUSH}[*3]	InRush current on voltage regulator power-on (POR or wakeup from Standby)	-	150	-	mA	
E_{RUSH}[*3]	InRush energy on voltage regulator power-on (POR or wakeup from Standby)	-	2.25	-	μC	V_{DD} = 1.8 V, T_A = 105 °C, I_{RUSH} = 150 mA for 15 us

Note:

1. It is recommended to power V_{DD} and AV_{DD} from the same source. A maximum difference of 0.3 V between V_{DD} and AV_{DD} can be tolerated during power-on and power-off operation .
2. To ensure stability, an external 1 μF output capacitor, C_{LDO} must be connected between the LDO_CAP pin and the closest GND pin of the device. Solid tantalum and multilayer ceramic capacitors are suitable as output capacitor. Additional 100 nF bypass capacitor between LDO_CAP pin and the closest GND pin of the device helps decrease output noise and improves the load transient response.
3. Guaranteed by design, not tested in production
4. Based on characterization, not tested in production unless otherwise specified.

Table 8.2-1 General Operating Conditions

8.3 DC Electrical Characteristics

8.3.1 Supply Current Characteristics for M03xB/M03xC/M03xD/M03xE

The current consumption is a combination of internal and external parameters and factors such as operating frequencies, device software configuration, I/O pin loading, I/O pin switching rate, program location in memory and so on. The current consumption is measured as described in below condition and table to inform test characterization result.

- All GPIO pins are in push pull mode and output high.
- The maximum values are obtained for V_{DD} = 3.6 V and maximum ambient temperature (T_A), and the typical values for T_A= 25 °C and V_{DD} = 1. 8V ~ 3.6 V unless otherwise specified.
- $V_{DD} = AV_{DD}$
- When the peripherals are enabled HCLK is the system clock, $f_{PCLK0, 1} = f_{HCLK}$.
- Program run CoreMark® code in Flash.

Symbol	Conditions	F_{HCLK}	Typ [*1]	Max[*1][*2]			Unit
			T_A = 25 °C	T_A = 25 °C	T_A = 85 °C	T_A = 105 °C	
I_{DD_RUN}	Normal run mode, executed from Flash, all peripherals disable	48 MHz	8.5	9.78	10.18	10.80	mA
		32 MHz	5.6	6.44	6.90	7.41	
		24 MHz	5	5.75	6.13	6.63	
		12 MHz	3.6	4.14	4.49	4.93	
		4 MHz	2.4	2.76	3.08	3.47	
		38.4 kHz	0.099	0.114	0.385	0.711	
		32.768 kHz	0.098	0.113	0.383	0.710	
	Normal run mode, executed from Flash, all peripherals enable	48 MHz	19.5	22.43	23.19	24.21	
		32 MHz	12.6	14.49	15.21	15.98	
		24 MHz	9.5	10.93	11.52	12.26	
		12 MHz	5.6	6.44	6.90	7.48	
		4 MHz	2.9	3.34	3.71	4.17	
		38.4 kHz	0.107	0.123	0.396	0.724	
		32.768 kHz	0.105	0.121	0.392	0.720	

Note:

1. When analog peripheral blocks such as ADC, ACMP, PLL, HIRC, LIRC, HXT and LXT are ON, an additional power consumption should be considered.
2. Based on characterization, not tested in production unless otherwise specified.

Table 8.3-1 Current Consumption in Normal Run Mode

Symbol	Conditions	F_{HCLK}	Typ	Max[*1] [*2]			Unit
			T_A = 25 °C	T_A = 25 °C	T_A = 85 °C	T_A = 105 °C	
I_{DD_IDLE}	Idle mode, all peripherals disable	48 MHz	3.85	4.43	4.79	5.26	mA
		32 MHz	2.42	2.78	3.15	3.57	
		24 MHz	2.35	2.70	3.05	3.47	
		12 MHz	1.83	2.10	2.43	2.81	
		4 MHz	1.51	1.74	2.05	2.43	
		38.4 kHz	0.095	0.109	0.380	0.706	
		32.768 kHz	0.095	0.109	0.380	0.707	
	Idle mode, all peripherals enable	48 MHz	14.94	17.18	17.87	18.79	
		32 MHz	9.47	10.89	11.52	12.21	
		24 MHz	7.2	8.28	8.81	9.47	
		12 MHz	4.3	4.95	5.38	5.90	
		4 MHz	2.43	2.79	3.16	3.59	
		38.4 kHz	0.103	0.118	0.392	0.720	
		32.768 kHz	0.102	0.117	0.389	0.718	

Note:

1. When analog peripheral blocks such as ADC, ACMP, PLL, HIRC, LIRC, HXT and LXT are ON, an additional power consumption should be considered.
2. Based on characterization, not tested in production unless otherwise specified.

Table 8.3-2 Current Consumption in Idle Mode

Symbol	Test Conditions	LXT[*1] 32.768 kHz	LIRC 38.4 kHz	Typ[*2]	Max[*3][*4]			Unit
				T_A = 25 °C	T_A = 25 °C	T_A = 85 °C	T_A = 105 °C	
I_{DD_PD}	Power-down mode, all peripherals disable	-	-	12	25 [*5]	350	700	µA
	Power-down mode, WDT/Timer/UART enable	V	-	13.5	27.5	360	710	
	Power-down mode, WDT/Timer/UART enable	-	V	12.5	26.5	365	715	
	Power-down mode, WDT use LIRC, UART/Timer use LXT	V	V	14	28	375	725	

Note:

1. Crystal used: AURUM XF66RU000032C0 with a CL of 20 pF for typical values
2. V_{DD} = AV_{DD} = 3.3V, LVR17 enabled, POR disabled and BOD disabled.
3. Based on characterization, not tested in production unless otherwise specified.
4. When analog peripheral blocks such as ADC and ACMP are ON, an additional power consumption should be considered.
5. Based on characterization, tested in production.

Table 8.3-3 Chip Current Consumption in Power-down Mode

8.3.2 Supply Current Characteristics for M03xG/M03xI

The current consumption is a combination of internal and external parameters and factors such as operating frequencies, device software configuration, I/O pin loading, I/O pin switching rate, program location in memory and so on. The current consumption is measured as described in below condition and table to inform test characterization result.

- All GPIO pins are in push pull mode and output high.
- The maximum values are obtained for V_{DD} = 3.6 V and maximum ambient temperature (T_A), and the typical values for T_A= 25 °C and V_{DD} = 1. 8V ~ 3.6 V unless otherwise specified.
- $V_{DD} = AV_{DD}$
- When the peripherals are enabled HCLK is the system clock, $f_{PCLK0, 1} = f_{HCLK}$.
- Program run CoreMark® code in Flash.

Symbol	Conditions	F_{HCLK}	Typ [*1]	Max[*1][*2]			Unit
			T_A = 25 °C	T_A = 25 °C	T_A = 85 °C	T_A = 105 °C	
I_{DD_RUN}	Normal run mode, executed from Flash, all peripherals disable	72 MHz[*3]	23.7	27.26	28.74	30.73	mA
		48 MHz	14.4	16.56	17.16	18.87	
		32 MHz	9.0	10.35	10.72	12.31	
		24 MHz	15.7	18.06	18.06	18.79	
		12 MHz	9.1	10.47	10.47	10.89	
		4 MHz	4.6	5.29	5.29	5.52	
		38.4 kHz	0.141	0.162	1.430	2.885	
		32.768 kHz	0.140	0.161	1.429	2.885	
	Normal run mode, executed from Flash, all peripherals enable	72 MHz[*3]	46.4	53.36	55.45	58.05	
		48 MHz	28.6	32.89	35.09	36.95	
		32 MHz	18.9	21.74	23.76	25.53	
		24 MHz	15.4	17.71	19.43	21.22	
		12 MHz	8.9	10.24	11.76	13.44	
		4 MHz	4.6	5.29	6.68	8.24	
		38.4 kHz	0.153	0.176	1.449	2.908	
		32.768 kHz	0.150	0.173	1.445	2.903	

Note:

1. When analog peripheral blocks such as ADC, ACMP, PLL, HIRC, LIRC, HXT and LXT are ON, an additional power consumption should be considered.
2. Based on characterization, not tested in production unless otherwise specified.
3. When chip works at V_{DD} = 2.0~3.6V.

Table 8.3-4 Current Consumption in Normal Run Mode

Symbol	Conditions	F_{HCLK}	Typ	Max[*1] [*2]			Unit
			T_A = 25 °C	T_A = 25 °C	T_A = 85 °C	T_A = 105 °C	
I_{DD_IDLE}	Idle mode, all peripherals disable	72 MHz[*3]	9.9	11.39	12.59	14.13	mA
		48 MHz	3.9	4.49	5.85	7.39	
		32 MHz	2.6	2.99	4.34	5.84	
		24 MHz	2.7	3.11	4.44	5.95	
		12 MHz	2.1	2.42	3.73	5.23	
		4 MHz	1.7	1.96	3.26	4.74	
		38.4 kHz	0.133	0.153	1.421	2.877	
		32.768 kHz	0.133	0.153	1.422	2.878	
	Idle mode, all peripherals enable	72 MHz[*3]	32.6	37.49	39.69	41.60	
		48 MHz	19.1	21.97	23.87	25.72	
		32 MHz	12.5	14.38	16.14	17.86	
		24 MHz	10.5	12.08	13.65	15.38	
		12 MHz	6.2	7.13	8.58	10.19	
		4 MHz	3.3	3.80	5.15	6.68	
		38.4 kHz	0.145	0.167	1.438	2.898	
		32.768 kHz	0.143	0.164	1.434	2.893	

Note:

1. When analog peripheral blocks such as ADC, ACMP, PLL, HIRC, LIRC, HXT and LXT are ON, an additional power consumption should be considered.
2. Based on characterization, not tested in production unless otherwise specified.
3. When chip works at V_{DD} = 2.0~3.6V.

Table 8.3-5 Current Consumption in Idle Mode

Symbol	Test Conditions	LXT[*1] 32.768 kHz	LIRC 38.4 kHz	Typ[*2]	Max[*3][*4]			Unit
				T_A = 25 °C	T_A = 25 °C	T_A = 85 °C	T_A = 105 °C	
I_{DD_PD}	Power-down mode, all peripherals disable	-	-	51.5	59.2 [*5]	1298	2732 [*5]	µA
	Power-down mode, WDT/Timer/UART enable	V	-	53.3	61.3	1294	2747	
	Power-down mode, WDT/Timer/UART enable	-	V	53.4	61.4	1300	2751	
	Power-down mode, WDT use LIRC, UART/Timer use LXT	V	V	55.2	63.5	1306	2758	

Note:

1. Crystal used: AURUM XF66RU000032C0 with a CL of 20 pF for typical values
2. V_{DD} = AV_{DD} = 3.3V, LVR17 enabled, POR disabled and BOD disabled.
3. Based on characterization, not tested in production unless otherwise specified.
4. When analog peripheral blocks such as ADC and ACMP are ON, an additional power consumption should be considered.
5. Based on characterization, tested in production.

Table 8.3-6 Chip Current Consumption in Power-down Mode

8.3.3 On-Chip Peripheral Current Consumption

- The typical values for T_A= 25 °C and V_{DD} = AV_{DD} = 3.3 V unless otherwise specified.
- All GPIO pins are set as output high of push pull mode without multi-function.
- HCLK is the system clock, f_{HCLK} = 48 MHz, $f_{PCLK0, 1}$ = f_{HCLK}.
- The result value is calculated by measuring the difference of current consumption between all peripherals clocked off and only one peripheral clocked on

Peripheral	I_{DD}[*1]	Unit
PDMA	0.721	mA
ISP	0.0002	
EBI	0.236	
HDIV	0.135	
CRC	0.119	
SRAM0IDLE	0.122	
WDT/WWDT	0.125	
RTC	0.102	
TMR0	0.332	
TMR1	0.303	
TMR2	0.299	
TMR3	0.292	
CLKO	0.095	
ACMP01[*3]	0.243	
I2C0	0.159	
I2C1	0.122	
QSPI	0.914	
SPI/I^2S	1.878	
UART0	0.629	
UART1	0.575	
UART2	0.631	
UART3	0.614	
UART4	0.584	
UART5	0.647	
UART6	0.549	
UART7	0.654	
USB FS Device	1.099	
ADC[*2]	0.962	
USCI0	0.638	

USCI1	0.445	
PWM0	1.257	
PWM1	1.26	
BPWM0	0.649	
BPWM1	0.652	

Note:

1. Guaranteed by characterization results, not tested in production.
2. When the ADC is turned on, add an additional power consumption per ADC for the analog part.
3. When the ACMP is turned on, add an additional power consumption per ACMP for the analog part.

Table 8.3-7 Peripheral Current Consumption

8.3.4 Wakeup Time from Low-Power Modes

The wakeup times given in Table 8.2-1 is measured on a wakeup phase with a 48 MHz HIRC oscillator.

Symbol	Parameter	Typ	Max	Unit
t_{WU_IDLE}	Wakeup from IDLE mode	5	6	cycles
t_{WU_NPD}[*1][*2]	Wakeup from normal power down mode	12	25	μs

Note:

1. Based on test during characterization, not tested in production.
2. The wakeup times are measured from the wakeup event to the point in which the application code reads the first

Table 8.3-8 Low-power Mode Wakeup Timings

8.3.5 I/O Current Injection Characteristics

In general, I/O current injection due to external voltages below V_{SS} or above V_{DD} except 5V-tolenece I/O should be avoided during normal product operation. However, the analog compoenent of the MCU is most likely to be affected by the injection current , but it is not easily clarified when abnormal injection accidentally happens. It is recommended to add a Schottky diode (pin to ground or pin to V_{DD}) to pins that include analog function which may potentially injection currents.

Symbol	Parameter	Negative injection	Positive injection	Unit	Test Condition
$I_{INJ(PIN)}$	Injected current by a I/O Pin	-0	0	mA	Injected current on nReset pins
		-0	0		Injected current on PF2~PF5, PA10, PA11 and PB0~PB15 for analog input function
		-5	NA		Injected current on any other 5V-tolerance I/O

Table 8.3-9 I/O Current Injection Characteristics

8.3.6 I/O DC Characteristics

8.3.6.1 PIN Input Characteristics

Symbol	Parameter	Min	Typ	Max	Unit	Test Conditions
V_{IL}	Input low voltage	0	-	$0.3*V_{DD}$	V	
V_{IH}	Input high voltage	$0.7*V_{DD}$	-	V_{DD}	V	
V_{HY}[*1]	Hysteresis voltage of schmitt input	-	$0.2*V_{DD}$	-	V	
I_{LK}[*2]	Input leakage current	-1		1	μA	$V_{SS} < V_{IN} < V_{DD}$, Open-drain or input only mode
		-1		1		$V_{DD} < V_{IN} < 5$ V, Open-drain or input only mode on any other 5v tolerance pins
R_{PU}[*1] [*3]	Pull up resistor	-	45	-	kΩ	V_{DD} = 3.3 V, Quasi mode
		-	120	-		V_{DD} = 1.8 V, Quasi mode

Note:

1. Guaranteed by characterization result, not tested in production.
2. Leakage could be higher than the maximum value, if abnormal injection happens.
3. To sustain a voltage higher than V_{DD} +0.3 V, the internal pull-up resistors must be disabled. Leakage could be higher than the maximum value, if positive current is injected on adjacent pins

Table 8.3-10 I/O Input Characteristics

8.3.6.2 I/O Output Characteristics

Symbol	Parameter	Min	Typ	Max	Unit	Test Conditions
I_{SR}[*1] [*2]	Source current for quasi-bidirectional mode and high level	-25.5	-28	-31	μA	V_{DD} = 3.3 V V_{IN}=(V_{DD}-0.4) V
		-19	-22	-24	μA	V_{DD} = 2.5 V V_{IN}=(V_{DD}-0.4) V
		-10.5	-13	-16	μA	V_{DD} = 1.8 V V_{IN}=(V_{DD}-0.4) V
	Source current for push-pull mode and high level	-8	-10	-15	mA	V_{DD} = 3.3 V V_{IN}=(V_{DD}-0.4) V
		-6	-8	-13	mA	V_{DD} = 2.5 V V_{IN}=(V_{DD}-0.4) V
		-3.5	-5.5	-10.5	mA	V_{DD} = 1.8 V V_{IN}=(V_{DD}-0.4) V
I_{SK}[*1] [*2]	Sink current for push-pull mode and low level	7.5	9	14.5	mA	V_{DD} = 3.3 V V_{IN}= 0.4 V
		6	7.5	13	mA	V_{DD} = 2.5 V V_{IN}= 0.4 V
		3.5	5	10.5	mA	V_{DD} = 1.8 V V_{IN}= 0.4 V
C_{IO}[*1]	I/O pin capacitance	-	5	-	pF	

Note:

1. Guaranteed by characterization result, not tested in production.
2. The I_{SR} and I_{SK} must always respect the abslute maximum current and the sum of I/O, CPU and peripheral must not exceed ΣI_{DD} and ΣI_{SS}.

Table 8.3-11 I/O Output Characteristics

8.3.6.3 nRESET Input Characteristics

Symbol	Parameter	Min	Typ	Max	Unit	Test Conditions
V_{ILR}	Negative going threshold, nRESET	-	-	0.3*V_{DD}	V	
V_{IHR}	Positive going threshold, nRESET	0.7*V_{DD}	-	-	V	
R_{RST}[*1]	Internal nRESET pull up resistor	-	45	-	KΩ	V_{DD} = 3.3 V
		-	120	-		V_{DD} = 1.8 V
t_{FR}[*1]	nRESET input filtered pulse time	-	32	-	μs	Normal run and Idle mode
		75	-	155		Power down mode

Note:

1. Guaranteed by characterization result, not tested in production.
2. It is recommended to add a 10 kΩ and 10uF capacitor at nRESET pin to keep reset signal stable.

Table 8.3-12 nRESET Input Characteristics

8.4 AC Electrical Characteristics

8.4.1 48 MHz Internal High Speed RC Oscillator (HIRC)

The 48 MHz RC oscillator is calibrated in production.

Symbol.	Parameter	Min	Typ	Max	Unit	Test Conditions
V_{DD}	Operating voltage	1.8	-	3.6	V	
f_{HRC}	Oscillator frequnecy	47.52	48	48.48	MHz	T_A = 25 °C, V_{DD} = 3.3V
	Frequency drift over temperarure and volatge	-1	-	1	%	T_A = 25 °C, V_{DD} = 3.3V
		-2[*1]	-	2[*1]	%	T_A = -40°C ~ +105 °C, V_{DD} = 1.8 ~ 3.6V
I_{HRC}[*1]	Operating current	-	1655	-	µA	
T_S[*2]	Stable time	-	11	15	µs	T_A = -40°C ~ +105 °C, V_{DD} = 1.8 ~ 3.6V

Note:

1. Guaranteed by characterization result, not tested in production.
2. Guaranteed by design.

Table 8.4-1 48 MHz Internal High Speed RC Oscillator(HIRC) Characteristics

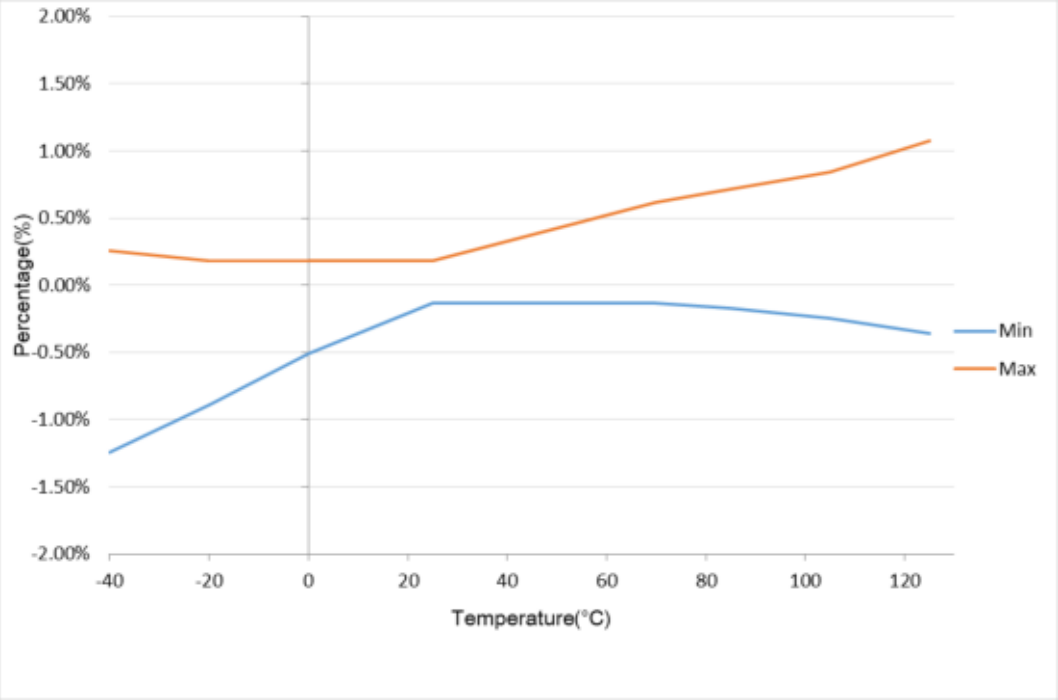

(a) Test condition: V_{DD}=3.6 V, Temp = -40~125°C

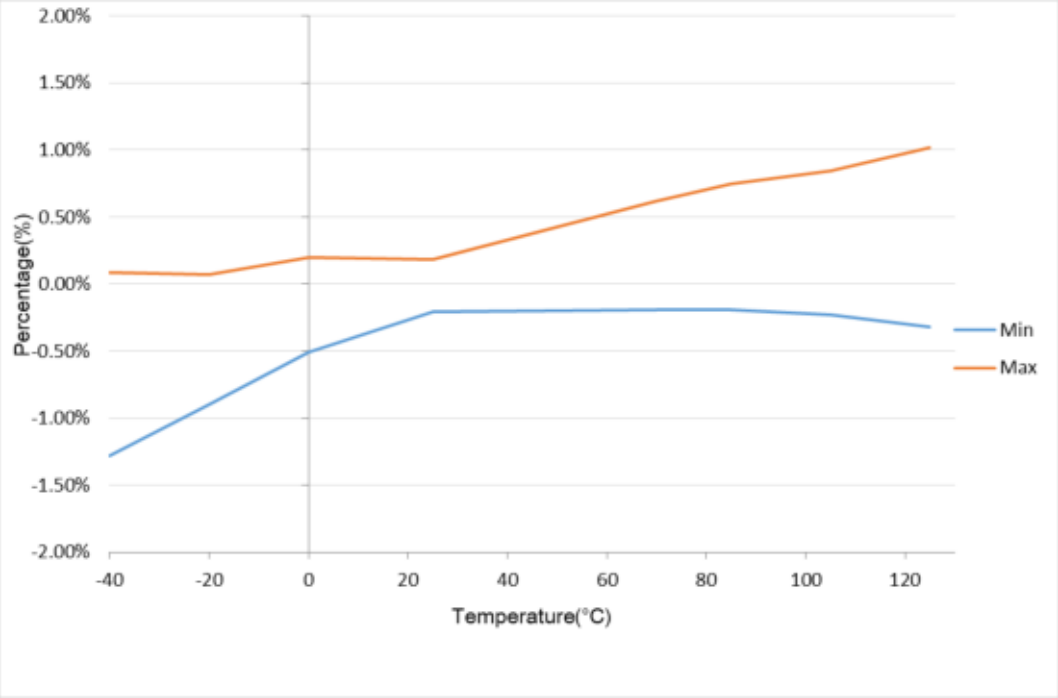

(b) Test condition: V_{DD}=2.7 V, Temp = -40~125°C

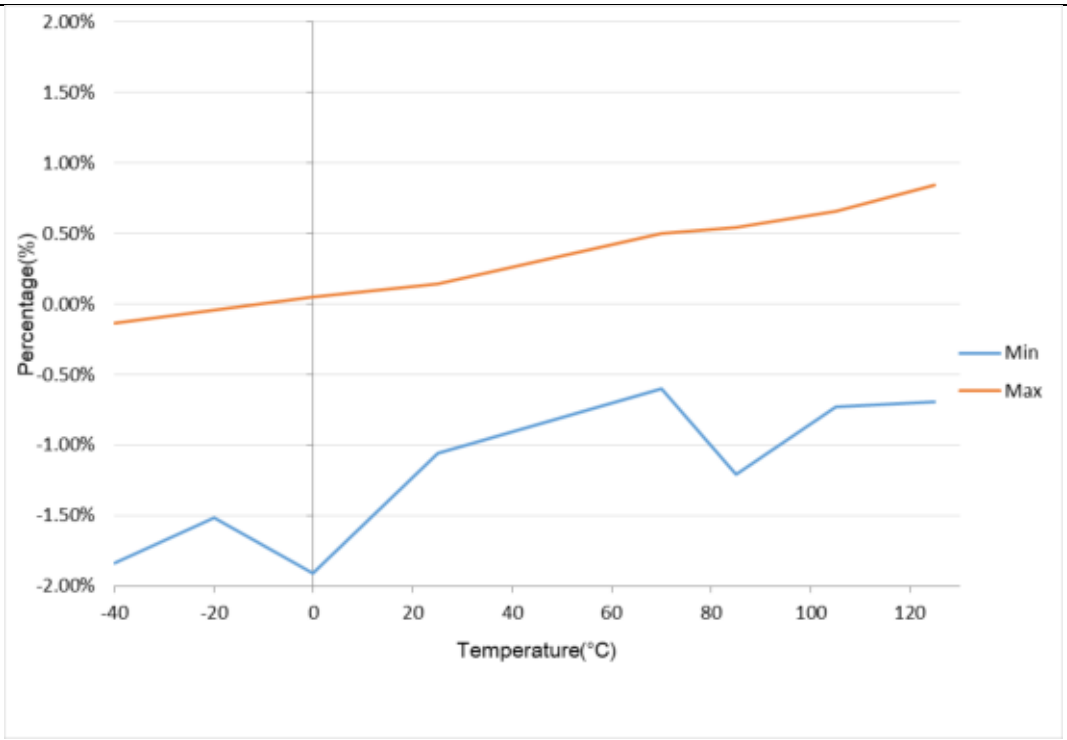

(c) Test condition: V_{DD}=1.8 V, Temp = -40~125°C

Note:

1. The graph is a statistical result using a limited number of samples. For the actual characteristic range, please refer to Table 8.4-1.

Figure 8.4-1 HIRC vs. Temperature

8.4.2 38.4 kHz Internal Low Speed RC Oscillator (LIRC)

Symbol	Parameter	Min [*1]	Typ	Max [*1]	Unit	Test Conditions
V_{DD}	Operating voltage	1.8	-	3.6	V	
F_{LRC} [*2]	Oscillator frequnecy	38.016	38.4	38.784	kHz	
	Frequency drift over temperarure and volatge	-1	-	1	%	T_A = 25 °C, V_{DD} = 3.3V
		-15	-	15	%	T_A=-40~105 °C V_{DD}=1.8V~3.6V Without software calibration
I_{LRC}	Operating current	-	1	-	μA	V_{DD} = 3.3V
T_S	Stable time	-	500	-	μs	T_A=-40~105 °C V_{DD}=1.8V~3.6V

Note:

1. Guaranteed by characterization, not tested in production.
2. The 38.4 kHz low speed RC oscillator can be calibrated by user.
3. Guaranteed by design.

Table 8.4-2 38.4 kHz Internal Low Speed RC Oscillator(LIRC) characteristics

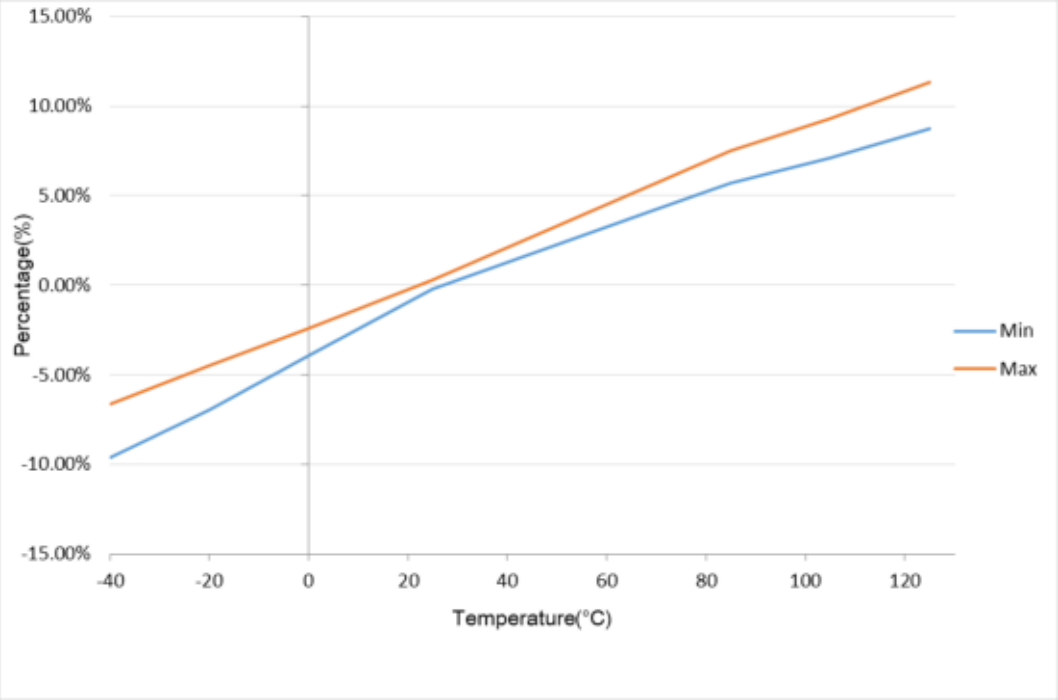

(a) Test condition: V_{DD}=3.6 V, Temp = -40~125°C

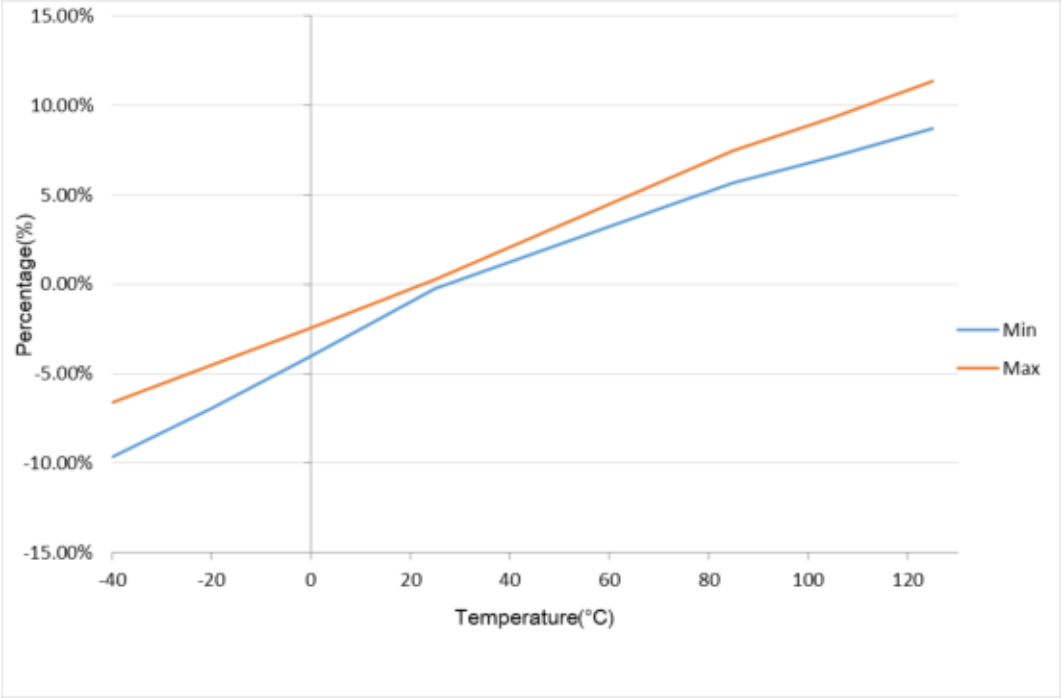

(b) Test condition: V_{DD}=2.7 V, Temp = -40~125°C

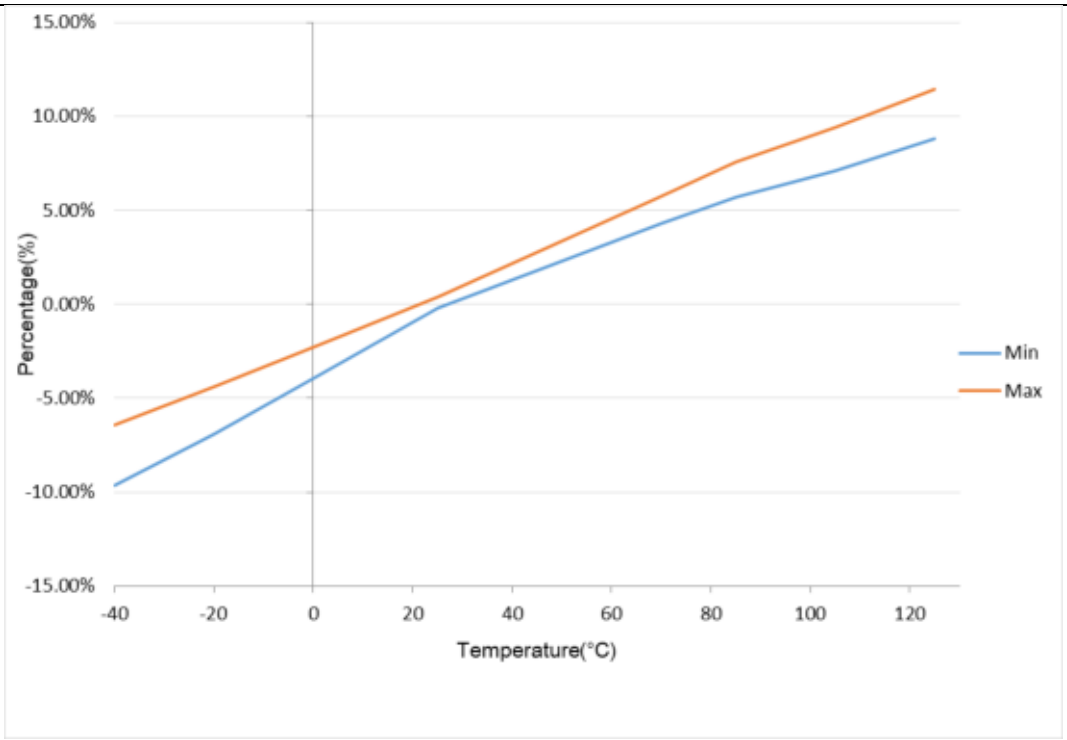

(c) Test condition: V_{DD}=1.8 V, Temp = -40~125°C

Note:

1. The graph is a statistical result using a limited number of samples. For the actual characteristic range, please refer to Table 8.4-2

Figure 8.4-2 LIRC vs. Temperature

8.4.3 External 4~32 MHz High Speed Crystal/Ceramic Resonator (HXT) characteristics

The high-speed external (HXT) clock can be supplied with a 4 to 32 MHz crystal/ceramic resonator oscillator. All the information given in this secion are based on characterization results obtained with typical external components. In the application, the external components have to be placed as close as possible to the XT1_IN and XT1_Out pins and must not be connected to any other devices in order to minimize output distortion and startup stabilization time. Refer to the crystal resonator manufacturer for more details on the resonator characteristics (frequency, package, accuracy).

Symbol	Parameter	Min[*1]	Typ	Max[*1]	Unit	Test Conditions
V_{DD}	Operating voltage	1.8	-	3.6	V	
R_f	Internal feedback resister	-	200	-	kΩ	
f_{HXT}	Oscillator frequency	4	-	32	MHz	
I_{HXT}	Current consumption	-	120	200	μA	4 MHz, Gain = L0
			170	300		8 MHz, Gain = L1
		-	250	450		12 MHz, Gain = L2
		-	350	600		16 Mhz, Gain = L3
			500	850		24 MHz, Gain = L4
		-	650	1100		32 MHz, Gain = L7
T_S	Stable time	-	1700	2200	μs	4 MHz, Gain = L0
			900	1100		8 MHz, Gain = L1
		-	600	740		12 MHz, Gain = L2
		-	450	650		16 Mhz, Gain = L3
		-	400	600		24 MHz, Gain = L4
		-	350	550		32 MHz, Gain = L7
Du_{HXT}	Duty cycle	40	-	60	%	
Vpp	Peak-to-peak amplitude	-	1	-	V	

Note:

1. Guaranteed by characterization, not tested in production.

Table 8.4-3 External 4~32 MHz High Speed Crystal (HXT) Oscillator

Symbol	Parameter	Min [*1]	Typ	Max [*1]	Unit	Test Conditions
Rs	Equivalent series resisotr(ESR)	-	-	150	Ω	Crystal @4 MHz
		-	-	50		Crystal @12 MHz
		-	-	40		Crystal @16 MHz
		-	-	40		Crystal @24 MHz
		-	-	40		Crystal @32 MHz

Note:

1. Guaranteed by characterization, not tested in production.
2. Safety factor (Sf) must be higher than 5 for HXT to determine the oscillator safe operation during the application life. If Safety factor isn't enough, the HXT gain should be increased.

$$S_f = \frac{-R}{Crystal\ ESR} = \frac{R_{ADD} + R_S}{R_S}$$

R_{ADD}: The value of smallest series resistance preventing the oscillator from starting up successfully. This resistance is only used to measure Safety factor (S_f) and is not suitable for mass production.

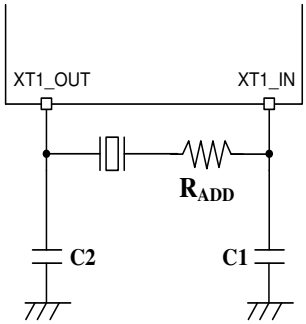

Table 8.4-4 External 4~32 MHz High Speed Crystal Characteristics

8.4.3.1 Typical Crystal Application Circuits

For C1 and C2, it is recommended to use high-quality external ceramic capacitors in 10 pF ~ 25 pF range, designed for high-frequency applications, and selected to match the requirements of the crystal or resonator. The crystal manufacturer typically specifies a load capacitance which is the series combination of C1 and C2. PCB and MCU pin capacitance must be included (8 pF can be used as a rough estimate of the combined pin and board capacitance) when sizing C1 and C2.

CRYSTAL	C1	C2	R1
4 MHz ~ 32 MHz	10 ~ 25 pF	10 ~ 25 pF	without

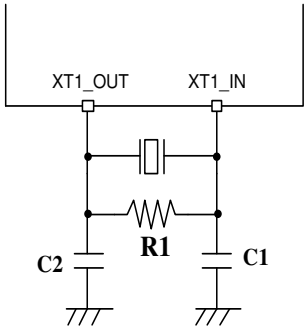

Figure 8.4-3 Typical Crystal Application Circuit

8.4.4 External 4~32 MHz High Speed Clock Input Signal Characteristics

For clock input mode the HXT oscillator is switched off and XT1_IN is a standard input pin to receive external clock. The external clock signal has to respect the below Table. The characteristics result from tests performed using a wavefrom generator.

Symbol	Parameter	Min [*1]	Typ	Max [*1]	Unit	Test Conditions
f_{HXT_ext}	External user clock source frequency	1	-	32	MHz	
t_{CHCX}	Clock high time	8	-	-	ns	
t_{CLCX}	Clock low time	8	-	-	ns	
t_{CLCH}	Clock rise time	-	-	10	ns	Low (10%) to high level (90%) rise time
t_{CHCL}	Clock fall time	-	-	10	ns	High (90%) to low level (10%) fall time
Du_{E_HXT}	Duty cycle	40	-	60	%	
V_{IH}	Input high voltage	$0.7*V_{DD}$	-	V_{DD}	V	
V_{IL}	Input low voltage	V_{SS}	-	$0.3*V_{DD}$	V	

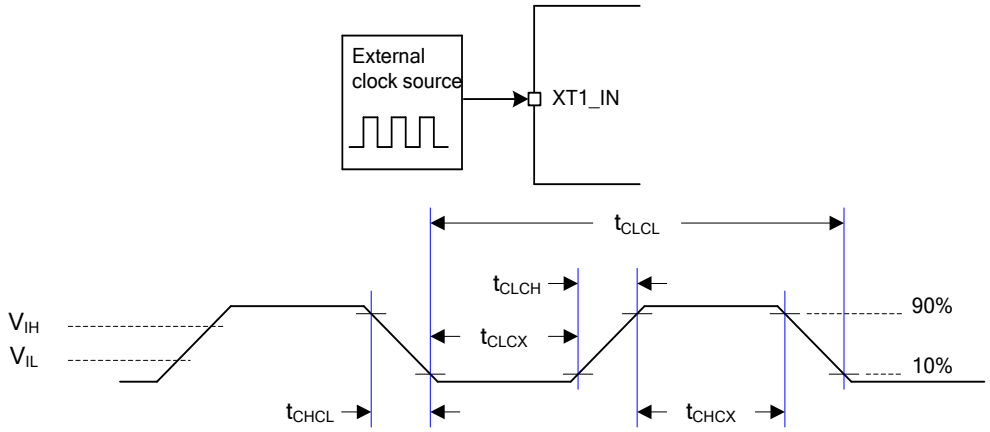

Note:

1. Guaranteed by characterization, not tested in production.

Table 8.4-5 External 4~32 MHz High Speed Clock Input Signal

8.4.5 External 32.768 kHz Low Speed Crystal/Ceramic Resonator (LXT) characteristics

The low-speed external (LXT) clock can be supplied with a 32.768 kHz crystal/ceramic resonator oscillator. All the information given in this secion are based on characterization results obtained with typical external components. In the application, the external components have to be placed as close as possible to the X32_OUT and X32_IN pins and must not be connected to any other devices in order to minimize output distortion and startup stabilization time. Refer to the crystal resonator manufacturer for more details on the resonator characteristics (frequency, package, accuracy).

Symbol	Parameter	Min [*1]	Typ	Max [*1]	Unit	Test Conditions
V_{DD}	Operation voltage	1.8	-	3.6	V	
T_{LXT}	Temperature range	-40	-	105	°C	
R_f	Internal feedback resistor	-	6.5	-	MΩ	
F_{LXT}	Oscillator frequency		32.768		kHz	
I_{LXT}	Current consumption	-	1.5	6	μA	ESR=35 kΩ, Gain = L1
		-	2	6		ESR=70 kΩ, Gain = L2
Ts_{LXT}	Stable time	-	500	900	ms	
Du_{LXT}	Duty cycle	30	-	70	%	
V_{pp}	Peak-to-peak amplitude	TBD	500	-	mV	

Note:
1. Guaranteed by characterization, not tested in production.

Table 8.4-6 External 32.768 kHz Low Speed Crystal (LXT) Oscillator

Symbol	Parameter	Min	Typ	Max	Unit	Test Conditions
Rs	Equivalnet Series Resisotr(ESR)	-	35	70	kΩ	Crystal @32.768 kHz

Table 8.4-7 External 32.768 kHz Low Speed Crystal Characteristics

8.4.5.1 Typical Crystal Application Circuits

CRYSTAL	C1	C2	R1
32.768 kHz, ESR < 70 KΩ	20 pF	20 pF	without

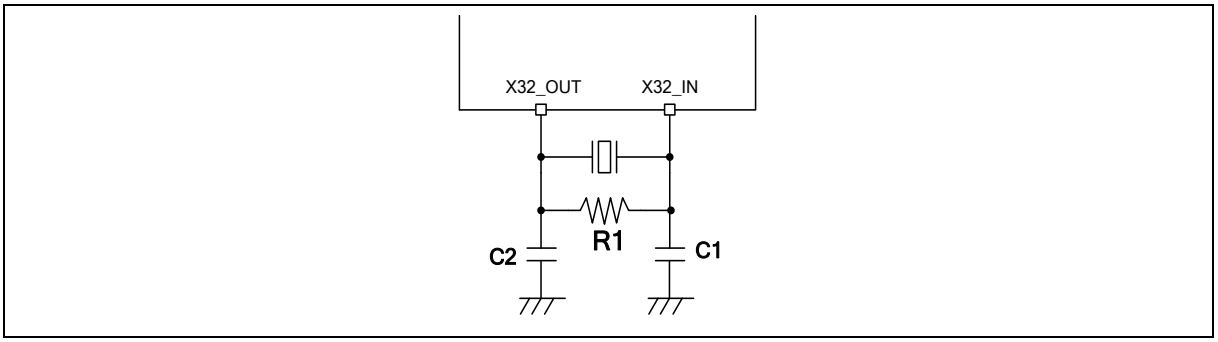

Figure 8.4-4 Typical 32.768 kHz Crystal Application Circuit

8.4.6 External 32.768 kHz Low Speed Clock Input Signal Characteristics

For clock input mode the LXT oscillator is switched off and X32_IN is a standard input pin to receive external clock. The external clock signal has to respect the below Table. The characteristics result from tests performed using a wavefrom generator.

Symbol	Parameter	Min [*1]	Typ	Max [*1]	Unit	Test Conditions
f_{LSE_ext}	External clock source frequency	-	32.768	-	kHz	
t_{CHCX}	Clock high time	450	-	-	ns	
t_{CLCX}	Clock low time	450	-	-	ns	
t_{CLCH}	Clock rise time	-	-	50	ns	Low (10%) to high level (90%) rise time
t_{CHCL}	Clock fall time	-	-	50	ns	High (90%) to low level (10%) fall time
Du_{E_LXT}	Duty cycle	40	-	60	%	
Xin_VIH	LXT input pin input high voltage	$0.7*V_{DD}$	-	V_{DD}	V	
Xin_VIL	LXT input pin input low voltage	V_{SS}	-	$0.3*V_{DD}$	V	

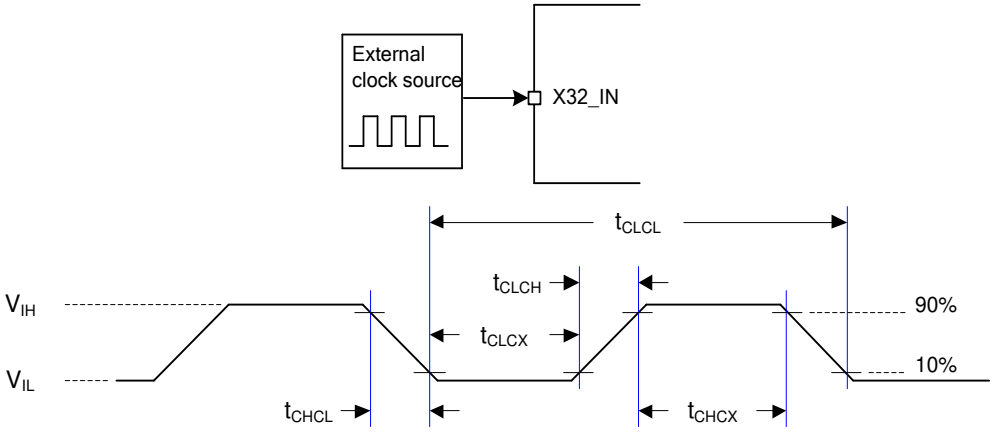

Note:

1. Guaranteed by design, not tested in production

Table 8.4-8 External 32.768 kHz Low Speed Clock Input Signal

8.4.7 PLL Characteristics

Symbol	Parameter	Min[*1]	Typ	Max[*1]	Unit	Test Conditions
f_{PLL_in}	PLL input clock	3.2	-	32	MHz	
f_{PLL_OUT}	PLL multiplier output clock	50	-	144	MHz	
f_{PLL_REF}	PLL reference clock	0.8	-	8	MHz	
f_{PLL_VCO}	PLL voltage controlled oscillator	200	-	500	MHz	
T_L	PLL locking time	-	-	500	µs	
Jitter[*2]	Cycle-to-cycle Jitter	-	200	350	ps	
I_{DD}	Power consumption	-	5	9	mA	V_{DD} =3.3V @ f_{PLL_OUT} = 144 MHz

Note:

1. Guaranteed by characterization, not tested in production
2. Guaranteed by design, not tested in production

Table 8.4-9 PLL Characteristics

8.4.8 I/O AC Characteristics

Symbol	Parameter	Typ.	Max[*1].	Unit	Test Conditions[*2]
$t_{f(IO)out}$	Output high (90%) to low level (10%) fall time	-	5.5	ns	C_L = 30 pF, V_{DD} >= 2.7 V
		-	3		C_L = 10 pF, V_{DD} >= 2.7 V
		-	8.5		C_L = 30 pF, V_{DD} >= 1.8 V
		-	4.5		C_L = 10 pF, V_{DD} >= 1.8 V
$t_{r(IO)out}$	Output low (10%) to high level (90%) rise time	-	5.5	ns	C_L = 30 pF, V_{DD} >= 2.7 V
		-	3		C_L = 10 pF, V_{DD} >= 2.7 V
		-	8.5		C_L = 30 pF, V_{DD} >= 1.8 V
		-	4.5		C_L = 10 pF, V_{DD} >= 1.8 V
$f_{max(IO)out}$[*3]	I/O maximum frequency	-	60	MHz	C_L = 30 pF, V_{DD} >= 2.7 V
		-	110		C_L = 10 pF, V_{DD} >= 2.7 V
		-	40		C_L = 30 pF, V_{DD} >= 1.8 V
		-	75		C_L = 10 pF, V_{DD} >= 1.8 V
I_{DIO}[*4]	I/O dynamic current consumption	2.77	-	mA	C_L = 30 pF, V_{DD} = 3.3 V, $f_{(IO)out}$ = 24 MHz
		1.19	-		C_L = 10 pF, V_{DD} = 3.3 V, $f_{(IO)out}$ = 24 MHz
		0.69	-		C_L = 30 pF, V_{DD} = 3.3 V, $f_{(IO)out}$ = 6 MHz
		0.3	-		C_L = 10 pF, V_{DD} = 3.3 V, $f_{(IO)out}$ = 6 MHz

Note:

1. Guaranteed by characterization result, not tested in production.
2. C_L is a external capacitive load to simulate PCB and device loading.
3. The maximum frequency is defined by $f_{max} = \frac{2}{3 \times (t_f + t_r)}$.
4. The I/O dynamic current consumption is defined by $I_{DIO} = V_{DD} \times f_{IO} \times (C_{IO} + C_L)$

Table 8.4-10 I/O AC Characteristics

8.5 Analog Characteristics

8.5.1 LDO

Symbol	Parameter	Min	Typ	Max	Unit	Test Condition
V_{DD}	Power supply	1.8	-	3.6	V	
V_{LDO}	Output voltage	-	1.8	-	V	
T_A	Temperature	-40	-	105	°C	

Note

1. It is recommended a 0.1μF bypass capacitor is connected between V_{DD} and the closest V_{SS} pin of the device.
2. For ensuring power stability, a 1μF capacitor must be connected between LDO_CAP pin and the closest V_{SS} pin of the device.

8.5.2 Reset and Power Control Block Characteristics

The parameters in below table are derived from tests performed under ambient temperature.

Symbol	Parameter	Min	Typ	Max	Unit	Test Conditions
I_{POR}[*1]	POR operating current	-	20	30	μA	AV_{DD} = 3.6V
I_{LVR}[*1]	LVR operating current	-	2	3.6		AV_{DD} = 3.6V
I_{BOD}[*1]	BOD operating current	-	3	5.5		AV_{DD} = 3.6V
V_{POR}	POR reset voltage	1.35	1.5	1.65	V	-
V_{LVR}	LVR reset voltage	1.6	1.7	1.8		
V_{BOD}	BOD brown-out detect voltage	1.8	2.0	2.2		BODVL = 0
		2.3	2.5	2.7		BODVL = 1
T_{LVR_SU}[*1]	LVR startup time	-	200	-	μs	-
T_{LVR_RE}[*1]	LVR respond time	-	16	-		-
T_{BOD_SU}[*1]	BOD startup time	-	1000	-		-
T_{BOD_RE}[*1]	BOD respond time	-	120	-		-
R_{VDDR}[*1]	V_{DD} rise time rate	10	-	-	μs/V	POR Enabled
R_{VDDF}[*1]	V_{DD} fall time rate	10	-	-		POR Enabled
		80	-	-		LVR Enabled
		250	-	-		BOD 2.0V Enabled
		150	-	-		BOD 2.5V Enabled

Note:

1. Guaranteed by characterization, not tested in production.
2. Design for specified applcaiton.

Table 8.5-1 Reset and Power Control Unit

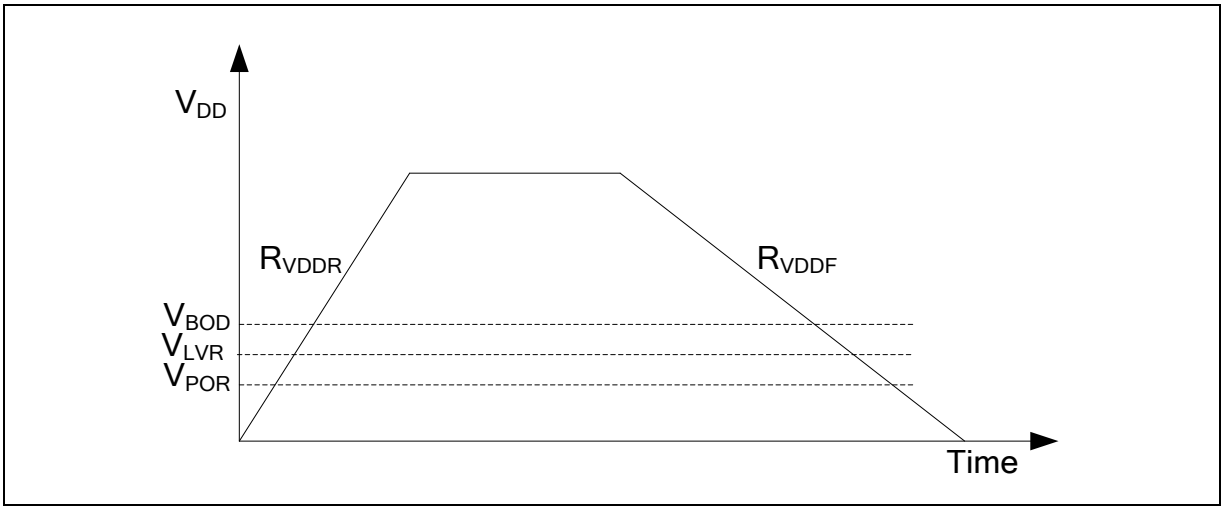

Figure 8.5-1 Power Ramp Up/Down Condition

8.5.3 12-bit SAR ADC

Symbol	Parameter	Min	Typ	Max	Unit	Test Conditions
T_A	Temperature	-40	-	105	°C	
AV_{DD}	Analog operating voltage	1.8	-	3.6	V	$V_{DD} = AV_{DD}$
V_{REF}	Reference voltage	1.8	-	AV_{DD}	V	
V_{IN}	ADC channel input voltage	0	-	V_{REF}	V	
V_{CM}	Common-Mode Input Range	$V_{REF}/2$			V	Full differential input
I_{ADC}[*1]	Operating current (AV_{DD} + V_{REF} current)	-	-	355	µA	$AV_{DD} = V_{DD} = V_{REF} = 3.3$ V $F_{ADC} = 34$ MHz $T_{CONV} = 17 * T_{ADC}$
N_R	Resolution	12			Bit	
F_{ADC}[*1] $1/T_{ADC}$	ADC Clock frequency	4	-	34	MHz	
T_{SMP}	Sampling Time	1	-	256	$1/F_{ADC}$	T_{SMP} = (EXTSMPT(ADC_ESMPCTL[7:0]) + 1) * T_{ADC}
T_{CONV}	Conversion time	17	-	272	$1/F_{ADC}$	$T_{CONV} = T_{SMP} + 16 * T_{ADC}$
F_{SPS}[*1]	Sampling Rate	0.236	-	2	MSPS	$F_{SPS} = F_{ADC} / T_{CONV}$ EXTSMPT(ADC_ESMPCTL[7:0]) = 0
T_{EN}	Enable to ready time	20	-	-	µs	
INL[*1]	Integral Non-Linearity Error	-2	-	+2	LSB	$V_{REF} = AV_{DD}$, except TSSOP20 and TSSOP28
		-4		+4	LSB	$V_{REF} = AV_{DD}$ TSSOP20 and TSSOP28
DNL[*1]	Differential Non-Linearity Error	-1	-	+2	LSB	$V_{REF} = AV_{DD}$, except TSSOP20 and TSSOP28
		-1		+4	LSB	$V_{REF} = AV_{DD}$ TSSOP20 and TSSOP28
E_G[*1]	Gain error	-4	-	+4	LSB	$V_{REF} = AV_{DD}$, except TSSOP20 and TSSOP28
		-10		+4	LSB	$V_{REF} = AV_{DD}$ TSSOP20 and TSSOP28
E_O[*1]$_T$	Offset error	-4	-	+4	LSB	$V_{REF} = AV_{DD}$, except TSSOP20 and TSSOP28
		-4		+10	LSB	$V_{REF} = AV_{DD}$ TSSOP20 and TSSOP28
E_A[*1]	Absolute Error	-4	-	+4	LSB	$V_{REF} = AV_{DD}$, except TSSOP20 and TSSOP28
		-8		+8	LSB	$V_{REF} = AV_{DD}$ TSSOP20 and TSSOP28

Symbol	Parameter	Min	Typ	Max	Unit	Test Conditions
ENOB[*1]	Effective number of bits	-	-	TBD	bits	F_{ADC} = 34 MHz AV_{DD} = V_{DD} = V_{REF} = 3.3 V Input Frequency = 20 kHz T_A = 25 °C
SINAD[*1]	Signal-to-noise and distortion ratio	-	-	TBD	dB	
SNR[*1]	Signal-to-noise ratio	-	-	TBD		
THD[*1]	Total harmonic distortion	-	-	TBD		
C_{IN}[*1]	Internal Capacitance	-	2.9	-	pF	
R_{IN}[*1]	Internal Switch Resistance	-	-	2	kΩ	
R_{EX}[*1]	External input impedance	-	-	50	kΩ	

Note:

1. Guaranteed by characterization result, not tested in production.
2. R_{EX} max formula is used to determine the maximum external impedance allowed for 1/4 LSB error. N = 12 (based on 12-bit resoluton) and k is the number of sampling clocks (T_{SMP}). C_{EX} represents the capacitance of PCB and pad and is combined with R_{EX} into a low-pass filter. Once the R_{EX} and C_{EX} values are too large, it is possible to filter the real signal and reduce the ADC accuracy.

$$R_{EX} = \frac{k}{f_{ADC} \times C_{IN} \times \ln(2^{N+2})} - R_{IN}$$

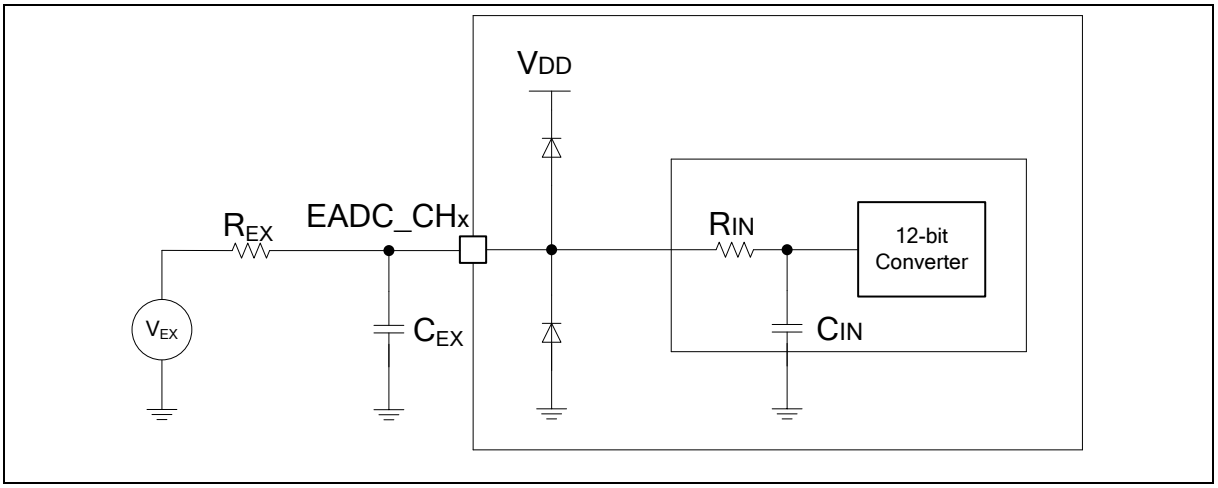

Note: Injection current is a important topic of ADC accuracy. Injecting current on any analog input pins should be avoided to protect the conversion being performed on another analog input. It is recommended to add Schottky diodes (pin to ground and pin to power) to analog pins which may potentially inject currents.

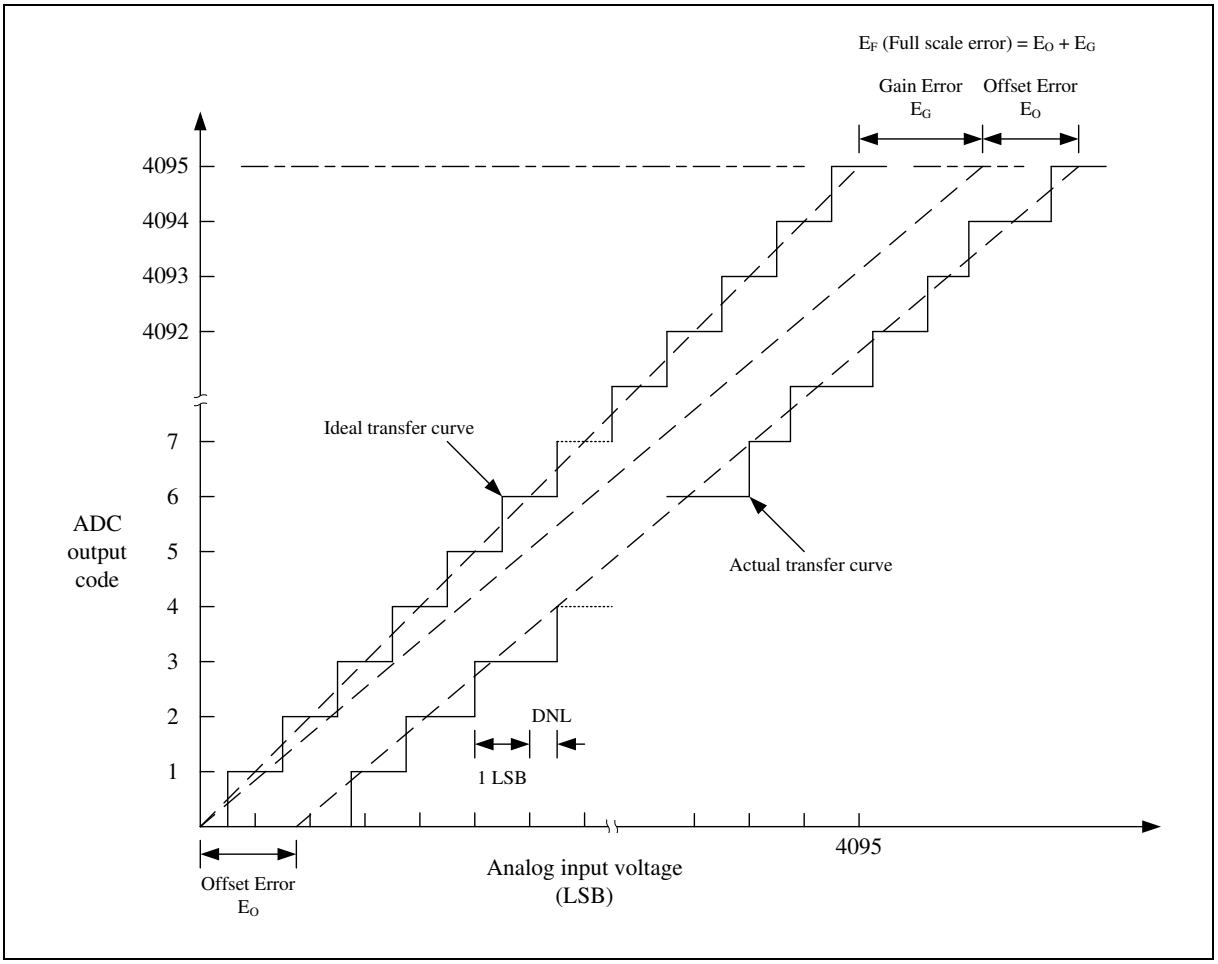

Note: The INL is the peak difference between the transition point of the steps of the calibrated transfer curve and the ideal transfer curve. A calibrated transfer curve means it has calibrated the offset and gain error from the actual transfer curve.

8.5.4 Analog Comparator Controller (ACMP)

The maximum values are obtained for V_{DD} = 3.6 V and maximum ambient temperature (T_A), and the typical values for T_A= 25 °C and V_{DD} = 3.3 V unless otherwise specified.

Symbol	Parameter	Min	Typ	Max	Unit	Test Conditions
AV_{DD}	Analog supply voltage	1.8	-	3.6	V	V_{DD} = AV_{DD}
T_A	Temperature	-40	-	105	˚C	
I_{DD}	Operating current	-	30	45	μA	
V_{CM}[*2]	Input common mode voltage range	0.35	1/2 AV_{DD}	AV_{DD} -0.3		
V_{DI}[*2]	Differential input voltage sensitivity	10	20	-	mV	Hysteresis disable
V_{offset}[*2]	Input offset voltage	-	10	20	mV	Hysteresis disable
V_{hys}[*2]	Hysteresis window	40	90	140	mV	
A_v[*1]	DC voltage Gain	45	65	75	dB	
T_d[*2]	Propagation delay	-	-	400	nS	
T_{Setup}[*2]	Setup time	-	-	4	uS	
A_{CRV}[*2]	CRV output voltage	-5	-	5	%	AV_{DD} x (1/6+CRVCTL/24)
R_{CRV}[*2]	Unit resistor value	-	4.2	-	kΩ	
T_{SETUP_CRV}[*2]	Setup time	-	-	350	μS	CRV output voltage settle to ±5%
I_{DD_CRV}[*2]	Operating current	-	30	45	μA	

Note:

1. Guaranteed by design, not tested in production
2. Guaranteed by characteristic, not tested in production

Table 8.5-2 ACMP Characteristics

8.6 Communications Characteristics

8.6.1 QSPI/SPI Dynamic Characteristics

Symbol	Parameter	Specificaitons[*1]				Test Conditions
		Min	Typ	Max	Unit	
F_{SPICLK} 1/ T_{SPICLK}	SPI clock frequency	-	-	24	MHz	2.7 V ≤ V_{DD} ≤ 3.6 V, C_L = 25 pF
		-	-	24		1.8 V ≤ V_{DD} ≤ 3.6 V, C_L = 25 pF
t_{CLKH}	Clock output High time	T_{SPICLK} / 2			ns	
t_{CLKL}	Clock output Low time	T_{SPICLK} / 2			ns	
t_{DS}	Data input setup time	2	-	-	ns	
t_{DH}	Data input hold time	4	-	-	ns	
t_V	Data output valid time	-	-	5	ns	2.7 V ≤ V_{DD} ≤ 3.6 V, C_L = 25 pF
		-	-	8.5	ns	1.8 V ≤ V_{DD} ≤ 3.6 V, C_L = 25 pF

Note:

1. Guaranteed by design.

Table 8.6-1 QSPI/SPI Master Mode Characteristics

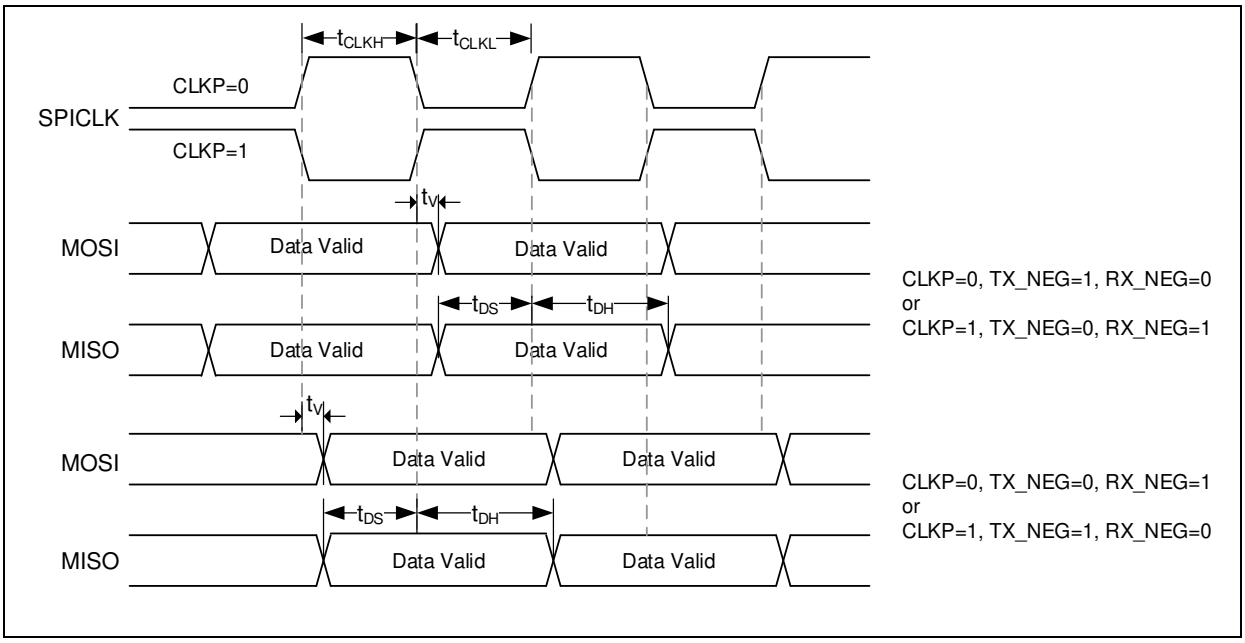

Figure 8.6-1 QSPI/SPI Master Mode Timing Diagram

Symbol	Parameter	Specificaitons[*1]				Test Conditions
		Min	Typ	Max	Unit	
F_{SPICLK} 1/ T_{SPICLK}	SPI clock frequency	-	-	16	MHz	2.7 V ≤ V_{DD} ≤ 3.6 V, CL = 30 pF
		-	-	16		1.8 V ≤ V_{DD} ≤ 3.6 V, CL = 30 pF
t_{CLKH}	Clock output High time	T_{SPICLK} / 2			ns	
t_{CLKL}	Clock output Low time	T_{SPICLK} / 2			ns	
t_{SS}	Slave select setup time	1 T_{SPICLK} + 2ns	-	-	ns	2.7 V ≤ V_{DD} ≤ 3.6 V, CL = 30 pF
		1 T_{SPICLK} + 3ns	-	-		1.8 V ≤ V_{DD} ≤ 3.6 V, CL = 30 pF
t_{SH}	Slave select hold time	1 T_{SPICLK}	-	-	ns	
t_{DS}	Data input setup time	1.5	-	-	ns	
t_{DH}	Data input hold time	3.5	-	-	ns	
t_V	Data output valid time	-	-	17.5	ns	2.7 V ≤ V_{DD} ≤ 3.6 V, CL = 30 pF
		-	-	25		1.8 V ≤ V_{DD} ≤ 3.6 V, CL = 30 pF

Note:

1. Guaranteed by design.

Table 8.6-2 QSPI/SPI Slave Mode Characteristics

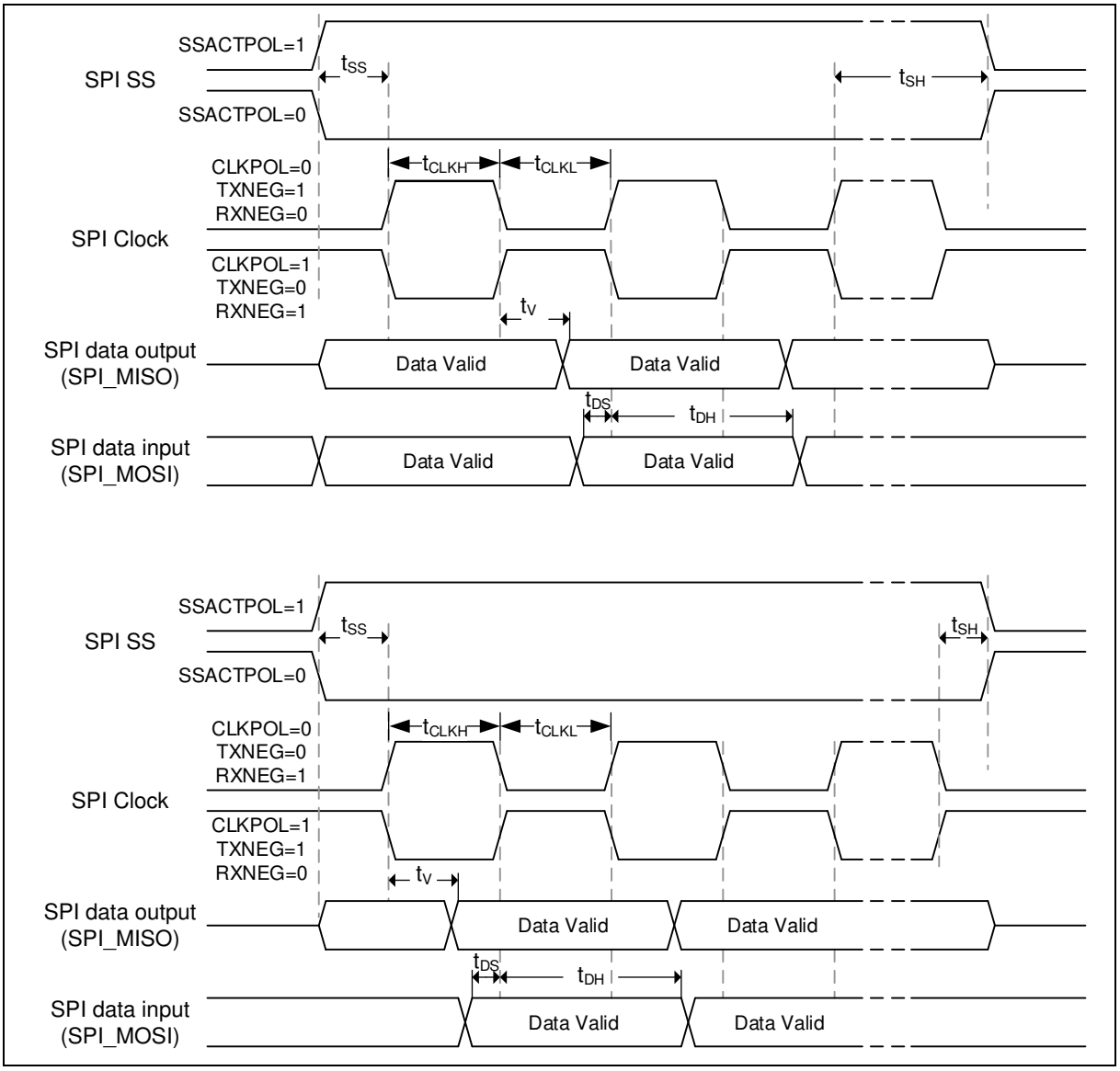

Figure 8.6-2 QSPI/SPI Slave Mode Timing Diagram

8.6.2 SPI - I²S Dynamic Characteristics

Symbol	Parameter	Min [*1]	Max [*1]	Unit	Test Conditions
$t_{w(CKH)}$	I²S clock high time	80	-	ns	Master f_{PCLK} = 48 MHz, data: 24 bits, audio frequency = 128 kHz
$t_{w(CKL)}$	I²S clock low time	80	-		
$t_{v(WS)}$	WS valid time	2	6		Master mode
$t_{h(WS)}$	WS hold time	2	-		Master mode
$t_{su(WS)}$	WS setup time	24	-		Slave mode
$t_{h(WS)}$	WS hold time	0	-		Slave mode
$DuCy_{(SCK)}$	I²S slave input clock duty cycle	30	70	%	Slave mode
$t_{su(SD_MR)}$	Data input setup time	10	-	ns	Master receiver
$t_{su(SD_SR)}$		7	-		Slave receiver
$t_{h(SD_MR)}$	Data input hold time	7	-		Master receiver
$t_{h(SD_SR)}$		4	-		Slave receiver
$t_{v(SD_ST)}$	Data output valid time	-	25		Slave transmitter (after enable edge)
$t_{h(SD_ST)}$	Data output hold time	4	-		Slave transmitter (after enable edge)
$t_{v(SD_MT)}$	Data output valid time	-	4		Master transmitter (after enable edge)
$t_{h(SD_MT)}$	Data output hold time	0	-		Master transmitter (after enable edge)

Note:

1. Guaranteed by design.

Table 8.6-3 I²S Characteristics

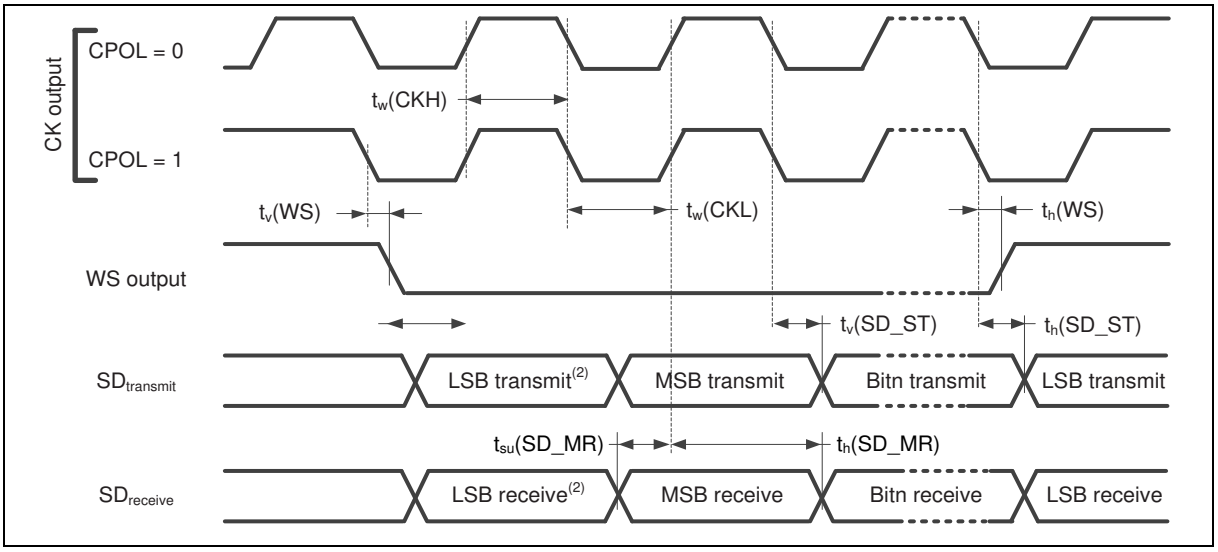

Figure 8.6-3 I²S Master Mode Timing Diagram

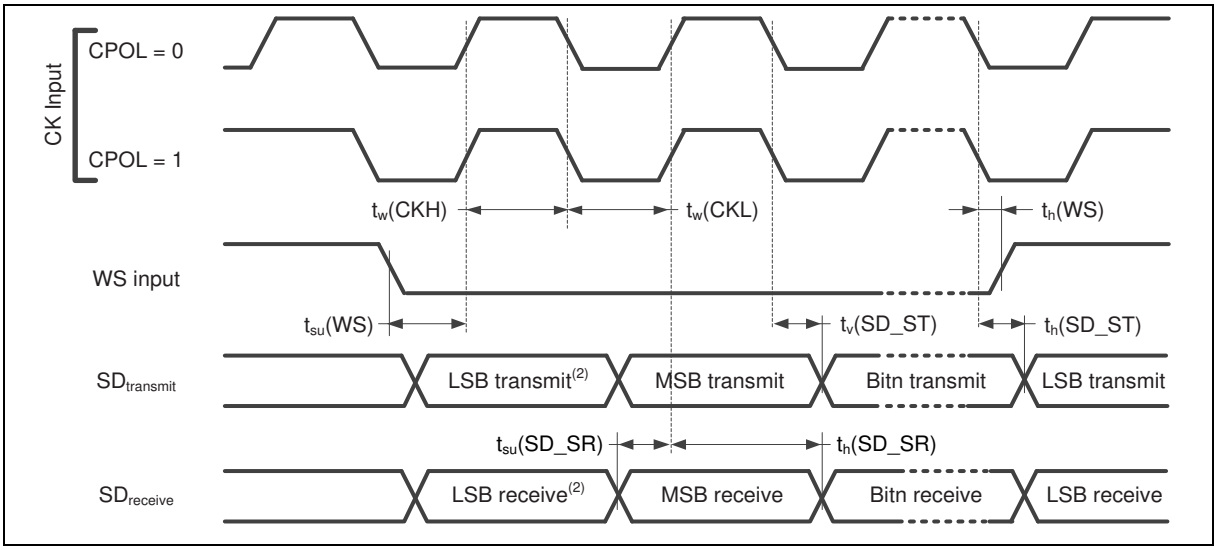

Figure 8.6-4 I^{2}S Slave Mode Timing Diagram

8.6.3 I²C Dynamic Characteristics

Symbol	Parameter	Standard Mode[1][2]		Fast Mode[1][2]		Unit
		Min	Max	Min	Max	
t_{LOW}	SCL low period	4.7	-	1.3	-	µs
t_{HIGH}	SCL high period	4	-	0.6	-	µs
$t_{SU;STA}$	Repeated START condition setup time	4.7	-	0.6	-	µs
$t_{HD;STA}$	START condition hold time	4	-	0.6	-	µs
$t_{SU;STO}$	STOP condition setup time	4	-	0.6	-	µs
t_{BUF}	Bus free time	4.7[3]	-	1.2[3]	-	µs
$t_{SU;DAT}$	Data setup time	250	-	100	-	ns
$t_{HD;DAT}$	Data hold time	0[4]	3.45[5]	0[4]	0.8[5]	µs
t_r	SCL/SDA rise time	-	1000	$20+0.1C_b$	300	ns
t_f	SCL/SDA fall time	-	300	-	300	ns
C_b	Capacitive load for each bus line	-	400	-	400	pF

Note:

1. Guaranteed by characteristic, not tested in production
2. HCLK must be higher than 2 MHz to achieve the maximum standard mode I2C frequency. It must be higher than 8 MHz to achieve the maximum fast mode I2C frequency.
3. I2C controller must be retriggered immediately at slave mode after receiving STOP condition.
4. The device must internally provide a hold time of at least 300 ns for the SDA signal in order to bridge the undefined region of the falling edge of SCL.
5. The maximum hold time of the Start condition has only to be met if the interface does not stretch the low period of SCL signal.

Table 8.6-4 I²C Characteristics

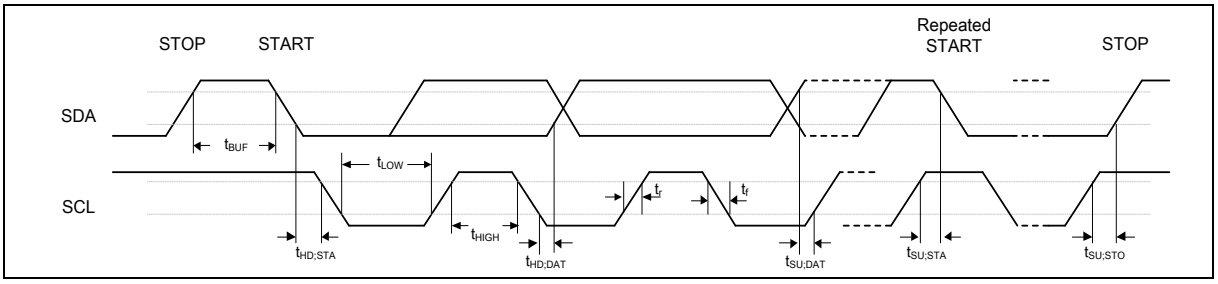

Figure 8.6-5 I²C Timing Diagram

8.6.4 USCI - SPI Dynamic Characteristics

Symbol	Parameter	Min [*1]	Typ	Max[*1]	Unit	Test Conditions
F_{SPICLK} 1/ T_{SPICLK}	SPI clock frequency	-	-	24	MHz	2.7 V ≤ V_{DD} ≤ 3.6 V, C_L = 30 pF
		-	-	24		1.8 V ≤ V_{DD} ≤ 3.6 V, C_L = 30 pF
t_{CLKH}	Clock output High time	T_{SPICLK} / 2			ns	
t_{CLKL}	Clock output Low time	T_{SPICLK} / 2			ns	
t_{DS}	Data input setup time	2	-	-	ns	
t_{DH}	Data input hold time	4	-	-	ns	
t_V	Data output valid time	-	-	5	ns	2.7 V ≤ V_{DD} ≤ 3.6 V, C_L = 30 pF
		-	-	8.5	ns	1.8 V ≤ V_{DD} ≤ 3.6 V, C_L = 30 pF

Note:

1. Guaranteed by design.

Table 8.6-5 USCI-SPI Master Mode Characteristics

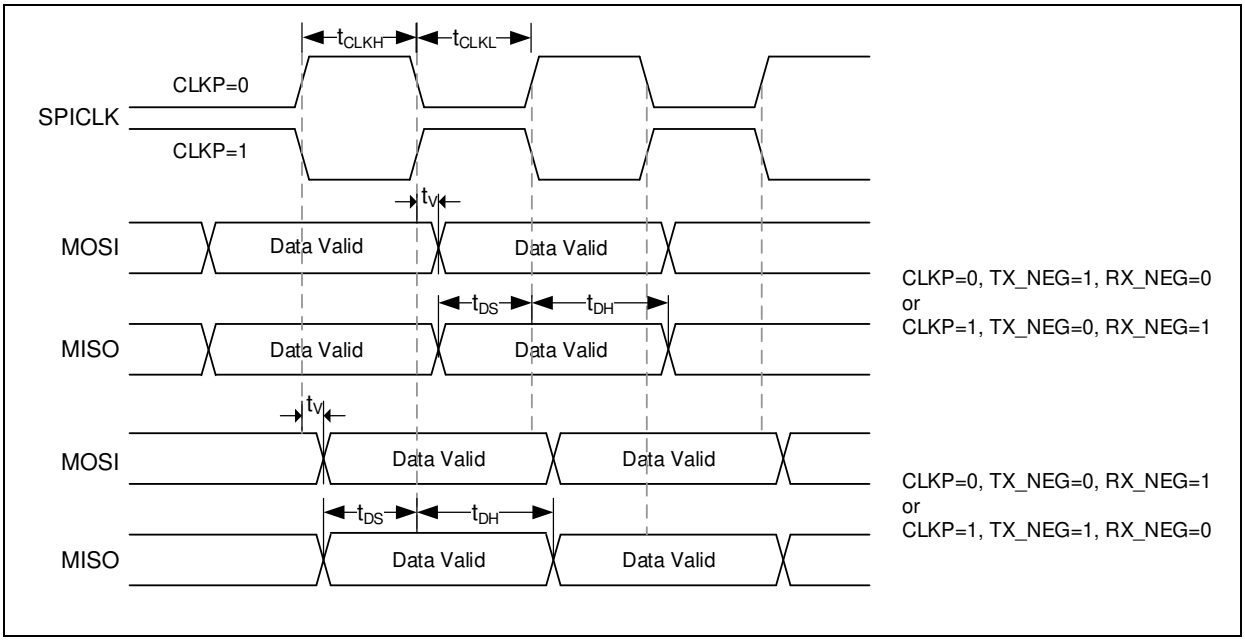

Figure 8.6-6 USCI-SPI Master Mode Timing Diagram

Symbol	Parameter	Min [*1]	Typ	Max [*1]	Unit	Test Conditions
F_{SPICLK} 1/ T_{SPICLK}	SPI clock frequency	-	-	7	MHz	2.7 V ≤ V_{DD} ≤ 3.6 V, C_L = 30 pF
		-	-	7		1.8 V ≤ V_{DD} ≤ 3.6 V, C_L = 30 pF
t_{CLKH}	Clock output High time	T_{SPICLK} / 2			ns	
t_{CLKL}	Clock output Low time	T_{SPICLK} / 2			ns	
t_{SS}	Slave select setup time	1 T_{SPICLK} + 2ns	-	-	ns	2.7 V ≤ V_{DD} ≤ 3.6 V, C_L = 30 pF
		1 T_{SPICLK} + 3ns	-	-		1.8 V ≤ V_{DD} ≤ 3.6 V, C_L = 30 pF
t_{SH}	Slave select hold time	1 T_{SPICLK}	-	-	ns	
t_{DS}	Data input setup time	2	-	-	ns	
t_{DH}	Data input hold time	4	-	-	ns	
t_V	Data output valid time	-	-	65	ns	2.7 V ≤ V_{DD} ≤ 3.6 V, C_L = 30 pF
		-	-	70		1.8 V ≤ V_{DD} ≤ 3.6 V, C_L = 30 pF

Note:

1. Guaranteed by design.

Table 8.6-6 USCI-SPI Slave Mode Characteristics

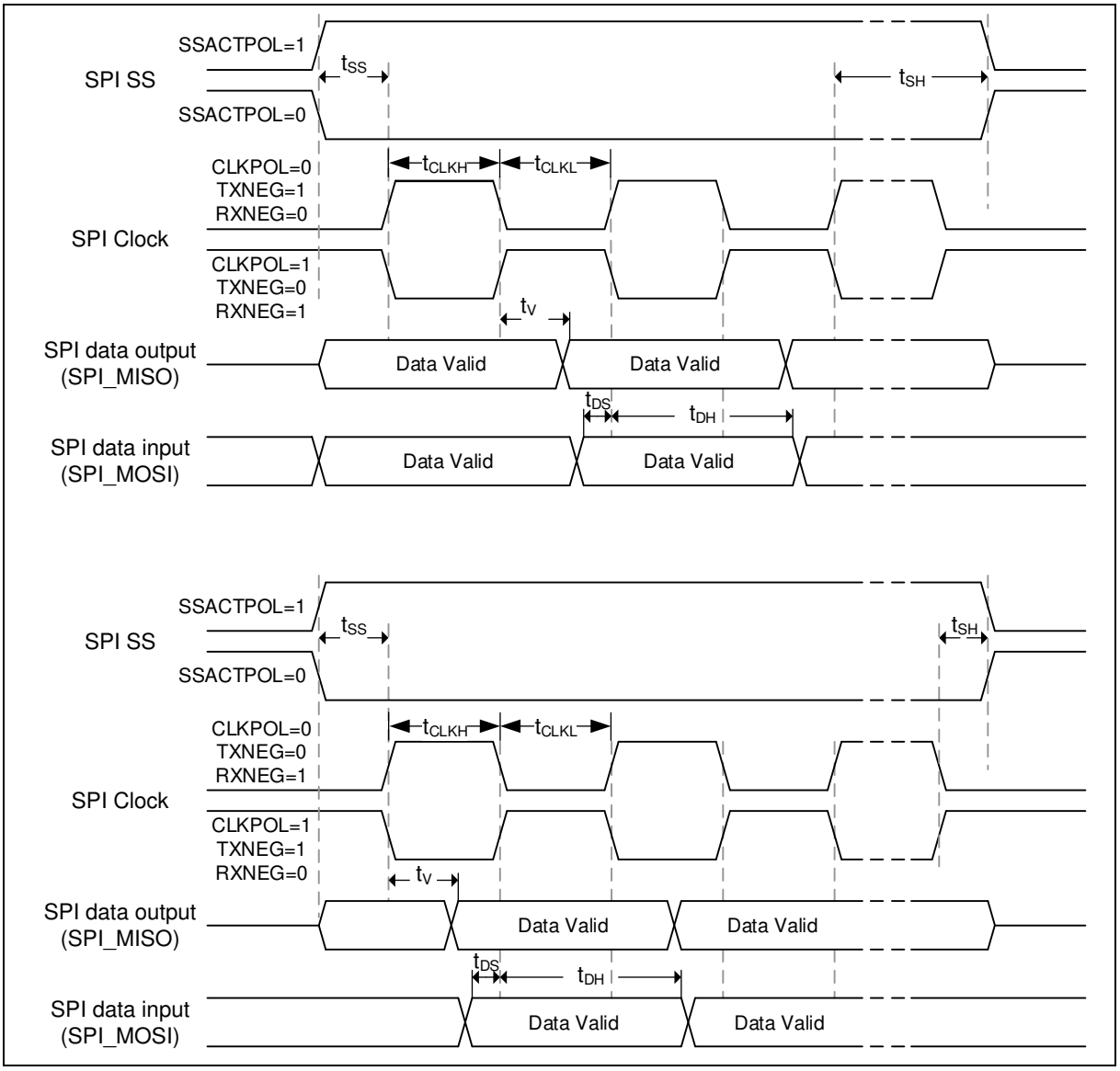

Figure 8.6-7 USCI-SPI Slave Mode Timing Diagram

8.6.5 USCI - I²C Dynamic Characteristics

Symbol	Parameter	Standard Mode[1][2]		Fast Mode[1][2]		Unit
		Min	Max	Min	Max	
t_{LOW}	SCL low period	4.7	-	1.3	-	µs
t_{HIGH}	SCL high period	4	-	0.6	-	µs
$t_{SU;STA}$	Repeated START condition setup time	4.7	-	0.6	-	µs
$t_{HD;STA}$	START condition hold time	4	-	0.6	-	µs
$t_{SU;STO}$	STOP condition setup time	4	-	0.6	-	µs
t_{BUF}	Bus free time	4.7[3]	-	1.2[3]	-	µs
$t_{SU;DAT}$	Data setup time	250	-	100	-	ns
$t_{HD;DAT}$	Data hold time	0[4]	3.45[5]	0[4]	0.8[5]	µs
t_r	SCL/SDA rise time	-	1000	$20+0.1C_b$	300	ns
t_f	SCL/SDA fall time	-	300	-	300	ns
C_b	Capacitive load for each bus line	-	400	-	400	pF

Note:

1. Guaranteed by characteristic, not tested in production
2. HCLK must be higher than 2 MHz to achieve the maximum standard mode I2C frequency. It must be higher than 8 MHz to achieve the maximum fast mode I2C frequency.
3. I2C controller must be retriggered immediately at slave mode after receiving STOP condition.
4. The device must internally provide a hold time of at least 300 ns for the SDA signal in order to bridge the undefined region of the falling edge of SCL.
5. The maximum hold time of the Start condition has only to be met if the interface does not stretch the low period of SCL signal.

Table 8.6-7 USCI-I²C Characteristics

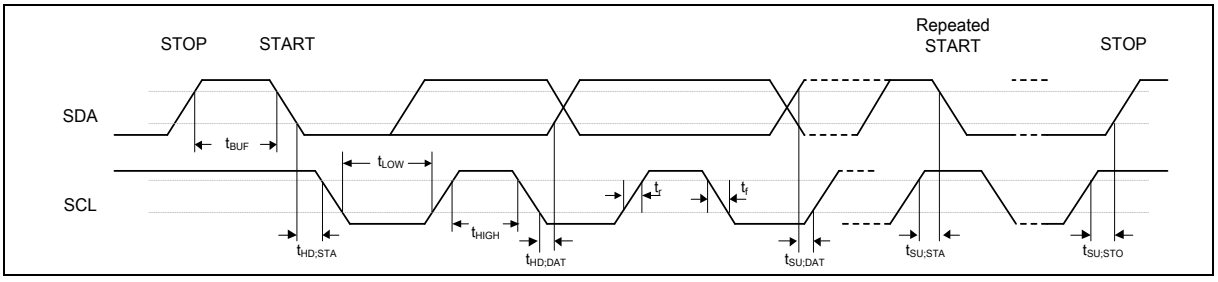

Figure 8.6-8 USCI-I²C Timing Diagram

8.6.6 USB Characteristics

8.6.6.1 USB Full-Speed Characteristics

Symbol	Parameter	Min [*1]	Typ	Max [*1]	Unit	Test Conditions
V_{BUS}	USB full speed transceiver operating voltage	4.4		5.25	V	
V_{DD33} [*2]	USB Internal power regulator output	3.0	3.3	3.6	V	
V_{IH}	Input high (driven)	2.0	-	-	V	-
V_{IL}	Input low	-	-	0.8	V	-
V_{DI}	Differential input sensitivity	0.2	-	-	V	|(USB_D+) - (USB_D-)|
V_{CM}	Differential common-mode range	0.8	-	2.5	V	Includes V_{DI} range
V_{SE}	Single-ended receiver threshold	0.8	-	2.0	V	-
	Receiver hysteresis	-	200	-	mV	-
V_{OL}	Output low (driven)	0	-	0.3	V	-
V_{OH}	Output high (driven)	2.8	-	3.6	V	-
V_{CRS}	Output signal cross voltage	1.3	-	2.0	V	-
R_{PU}	Pull-up resistor	1.19	-	1.9	kΩ	-
V_{TRM}	Termination voltage for upstream port pull-up (RPU)	3.0	-	3.6	V	
Z_{DRV} [*3]	Driver output resistance	-	10	-	Ω	Steady state drive
C_{IN}	Transceiver capacitance	-	-	26	pF	Pin to GND

Note:

1. Guaranteed by characterization result, not tested in production.
2. To ensure stability, an external 1 μF output capacitor, 1uF external capacitor must be connected between the USB_VDD33_CAP pin and the closest GND pin of the device.
3. USB_D+ and USB_D- must be connected with series resistors to fit USB Full-speed spec request (28 ~ 44Ω).

Table 8.6-8 USB Full-Speed Characteristics

8.6.6.2 USB Full-Speed PHY characteristics

Symbol	Parameter	Min [*1]	Typ	Max [*1]	Unit	Test Conditions
T_{FR}	rise time	4	-	20	ns	C_L=50 pF
T_{FF}	fall time	4	-	20	ns	C_L=50 pF
T_{FRFF}	rise and fall time matching	90	-	111.11	%	$T_{FRFF} = T_{FR}/T_{FF}$

Note:

1. Guaranteed by characterization result, not tested in production.

Table 8.6-9 USB Full-Speed PHY Characteristics

8.7 Flash DC Electrical Characteristics

The devices are shipped to customers with the Flash memory erased.

Symbol	Parameter	Min	Typ	Max	Unit	Test Condition
V_{FLA}[1]	Supply voltage	1.62	1.8	1.98	V	T_A = 25°C
T_{ERASE}	Page erase time	-	20	-	ms	
T_{PROG}	Program time	-	60	-	µs	
I_{DD1}	Read current	-	7	-	mA	
I_{DD2}	Program current	-	8	-	mA	
I_{DD3}	Erase current	-	12	-	mA	
N_{ENDUR}	Endurance	20,000	-		cycles[2]	T_J = -40°C~125°C
T_{RET}	Data retention	65	-	-	year	20 kcycle[3] T_J = 55°C
		10	-	-	year	20 kcycle[3] T_J = 85°C
		4	-	-	year	20 kcycle[3] T_J = 125°C

Note:

1. V_{FLA} is source from chip internal LDO output voltage.
2. Number of program/erase cycles.
3. Guaranteed by design.

9 PACKAGE DIMENSIONS

9.1 TSSOP 20 (4.4x6.5x0.9 mm)

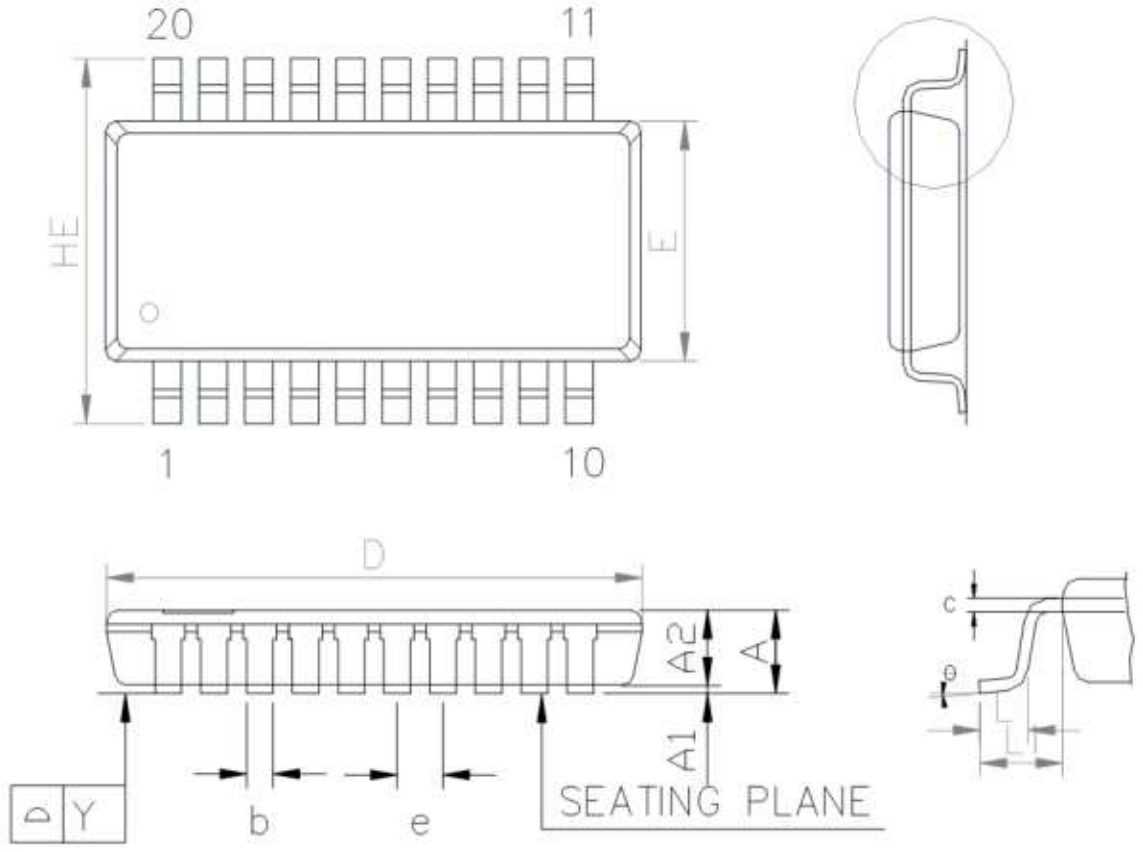

SYMBOL	DIMENSION (MM)			DIMENSION (INCH)		
	MIN.	NOM.	MAX.	MIN.	NOM.	MAX.
A	-	-	1.20	-	-	0.047
A1	0.05	-	0.15	0.002	-	0.006
A2	0.80	0.90	1.05	0.031	0.035	0.041
E	4.30	4.40	4.50	0.169	0.173	0.177
HE	6.40 BSC			0.252 BSC		
D	6.40	6.50	6.60	0.252	0.256	0.260
L	0.50	0.60	0.75	0.020	0.024	0.030
L1	1.00 REF			0.039 REF		
b	0.19	-	0.30	0.007	-	0.012
e	0.65 BSC			0.026 BSC		
c	0.09	-	0.20	0.004	-	0.008
θ	0°	-	8°	0°	-	8°
Y	0.10 BASIC			0.004 BASIC		

9.2 TSSOP 28 (4.4x9.7x1.0 mm)

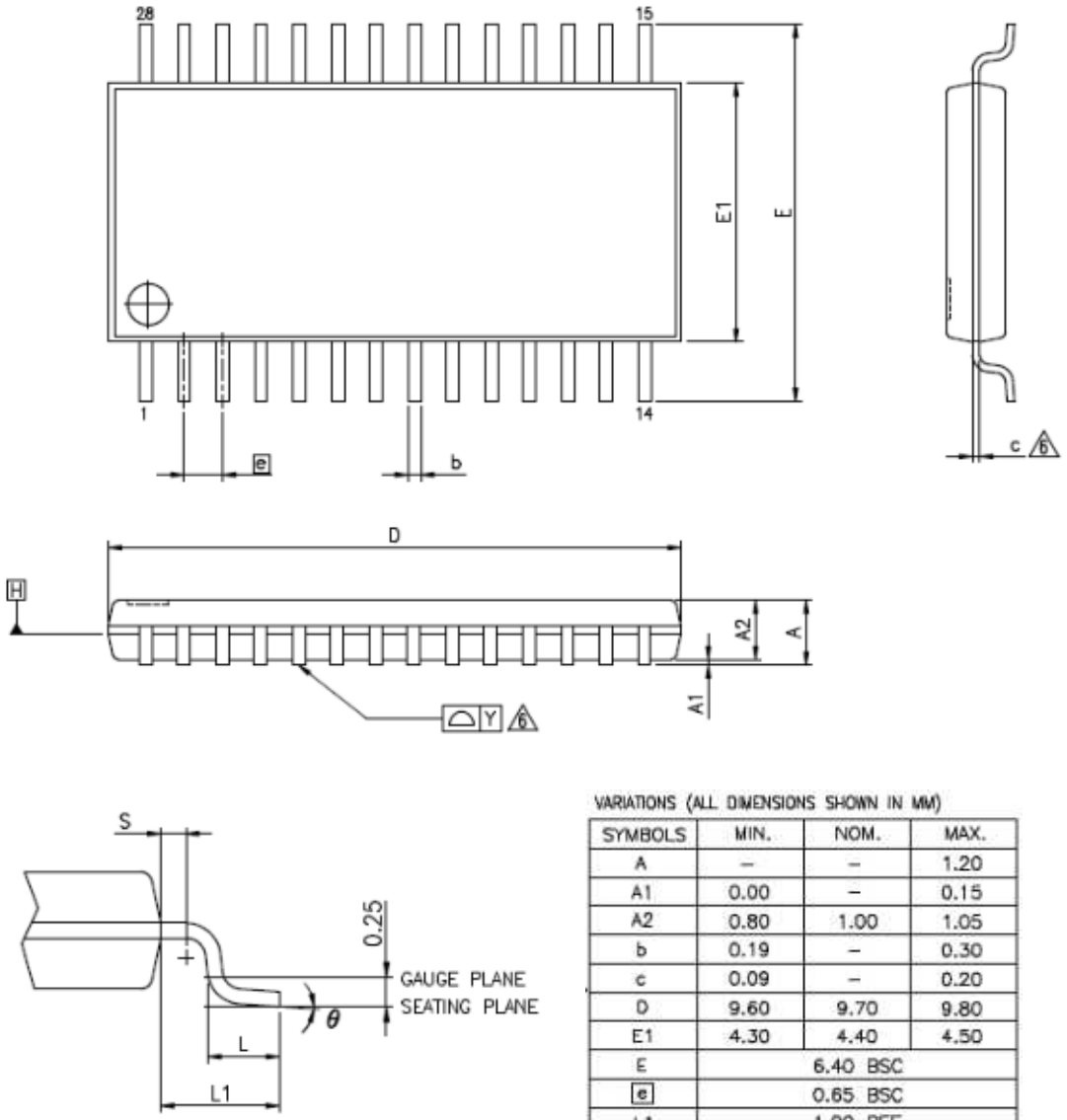

VARIATIONS (ALL DIMENSIONS SHOWN IN MM)

SYMBOLS	MIN.	NOM.	MAX.
A	–	–	1.20
A1	0.00	–	0.15
A2	0.80	1.00	1.05
b	0.19	–	0.30
c	0.09	–	0.20
D	9.60	9.70	9.80
E1	4.30	4.40	4.50
E	6.40 BSC		
e	0.65 BSC		
L1	1.00 REF		
L	0.45	0.60	0.75
S	0.20	–	–
θ	0°	–	8°
Y	0.10		

9.3 QFN 33L (4X4x0.8 mm Pitch:0.40 mm)

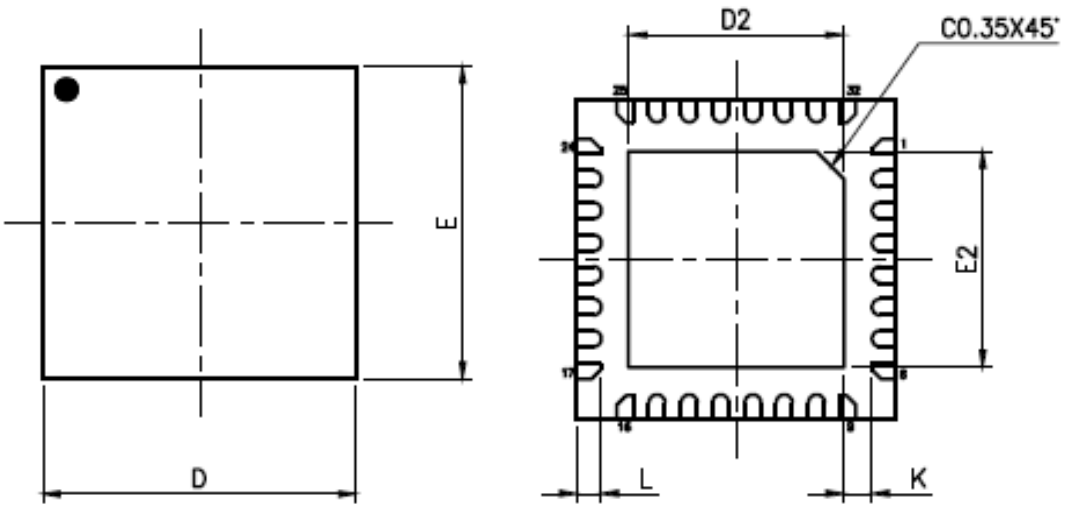

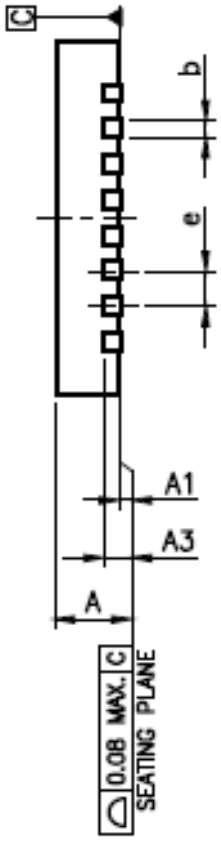

SYMBOLS	MIN.	NOM.	MAX.
A	0.70	0.75	0.80
A1	0.00	0.02	0.05
A3	0.203 REF.		
b	0.15	0.20	0.25
D	4.00 BSC		
E	4.00 BSC		
e	0.40 BSC		
L	0.25	0.30	0.35
D2	2.60	2.70	2.80
E2	2.60	2.70	2.80
K	0.20	—	—

9.4 LQFP 48L (7x7x1.4 mm Footprint 2.0mm)

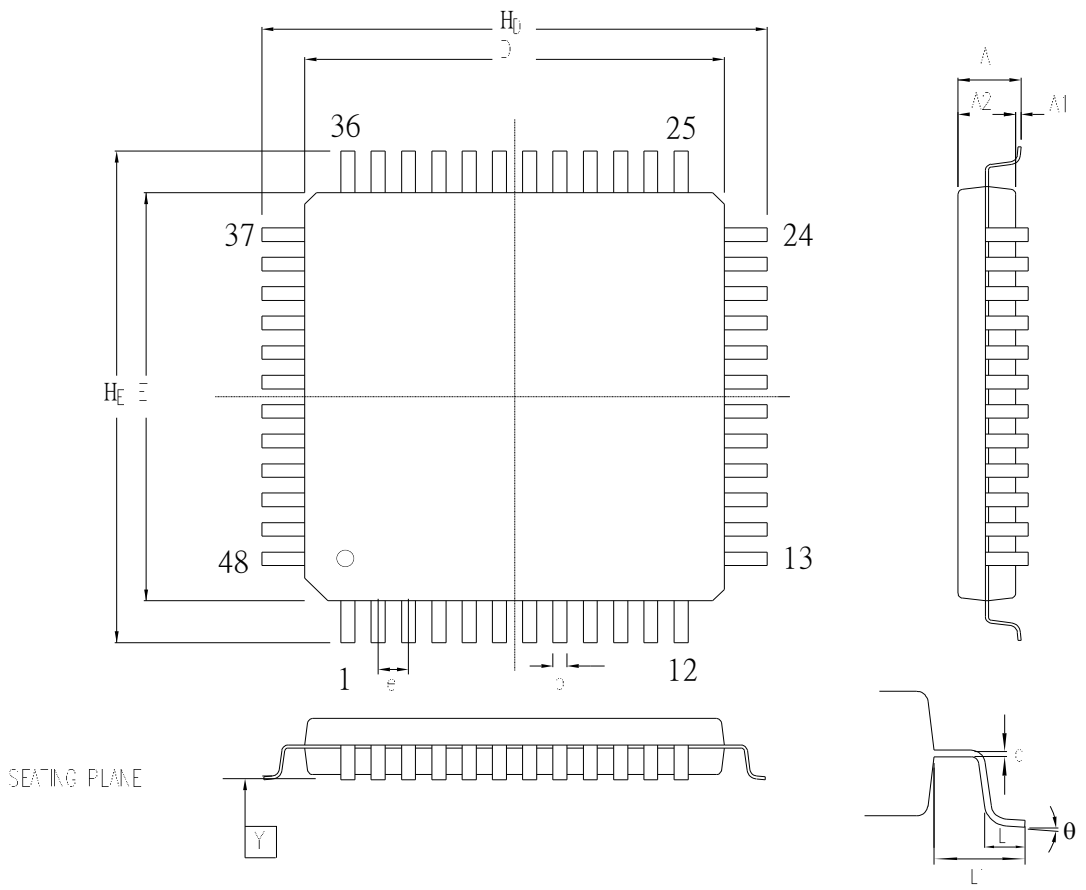

Controlling dimension : Millimeters

Symbol	Dimension in inch			Dimension in mm		
	Min	Nom	Max	Min	Nom	Max
A	—	—	—	—	—	—
A_1	0.002	0.004	0.006	0.05	0.10	0.15
A_2	0.053	0.055	0.057	1.35	1.40	1.45
b	0.006	0.008	0.010	0.15	0.20	0.25
c	0.004	0.006	0.008	0.10	0.15	0.20
D	0.272	0.276	0.280	6.90	7.00	7.10
E	0.272	0.276	0.280	6.90	7.00	7.10
e	0.014	0.020	0.026	0.35	0.50	0.65
H_D	0.350	0.354	0.358	8.90	9.00	9.10
H_E	0.350	0.354	0.358	8.90	9.00	9.10
L	0.018	0.024	0.030	0.45	0.60	0.75
L_1	—	0.039	—	—	1.00	—
Y	—	—	0.004	—	—	0.10
θ	0	—	7	0	—	7

9.5 LQFP 64L (7x7x1.4 mm Footprint 2.0 mm)

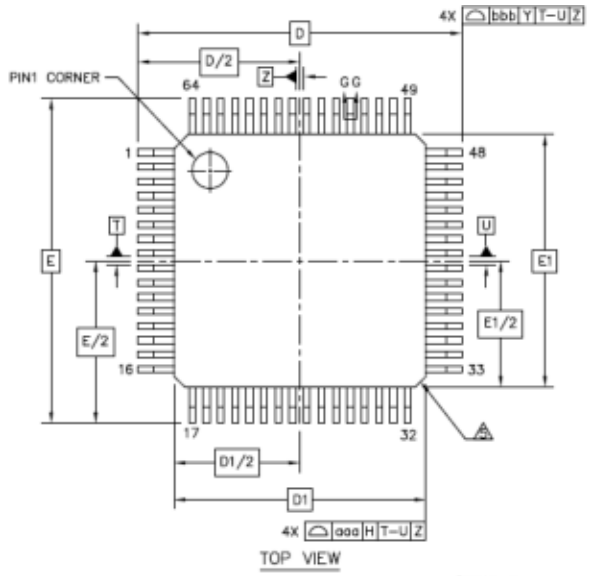

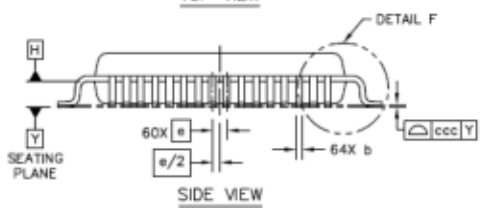

		SYMBOL	MIN	NOM	MAX
TOTAL THICKNESS		A	---	---	1.6
STAND OFF		A1	0.05	---	0.15
MOLD THICKNESS		A2	1.35	1.4	1.45
LEAD WIDTH(PLATING)		b	0.13	0.18	0.23
LEAD WIDTH		b1	0.13	0.16	0.19
L/F THICKNESS(PLATING)		c	0.09	---	0.2
L/F THICKNESS		c1	0.09	---	0.16
BODY SIZE	X	D	9 BSC		
	Y	E	9 BSC		
	X	D1	7 BSC		
	Y	E1	7 BSC		
LEAD PITCH		e	0.4 BSC		
		L	0.45	0.6	0.75
FOOTPRINT		L1	1 REF		
		θ	0°	3.5°	7°
		θ1	0°	---	---
		θ2	11°	12°	13°
		θ3	11°	12°	13°
		R1	0.08	---	---
		R2	0.08	---	0.2
		S	0.2	---	---
PACKAGE EDGE TOLERANCE		aaa	0.2		
LEAD EDGE TOLERANCE		bbb	0.2		
COPLANARITY		ccc	0.08		
LEAD OFFSET		ddd	0.07		
MOLD FLATNESS		eee	0.05		

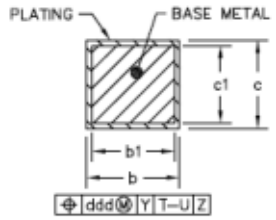

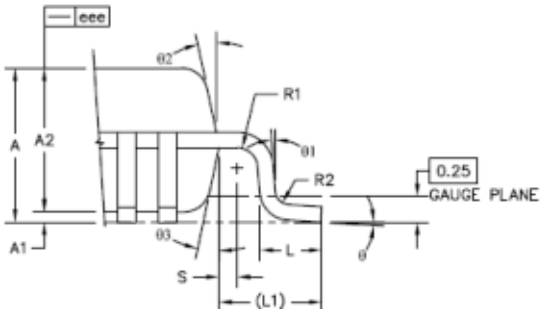

9.6 LQFP 128L (14x14x1.4 mm Footprint 2.0 mm)

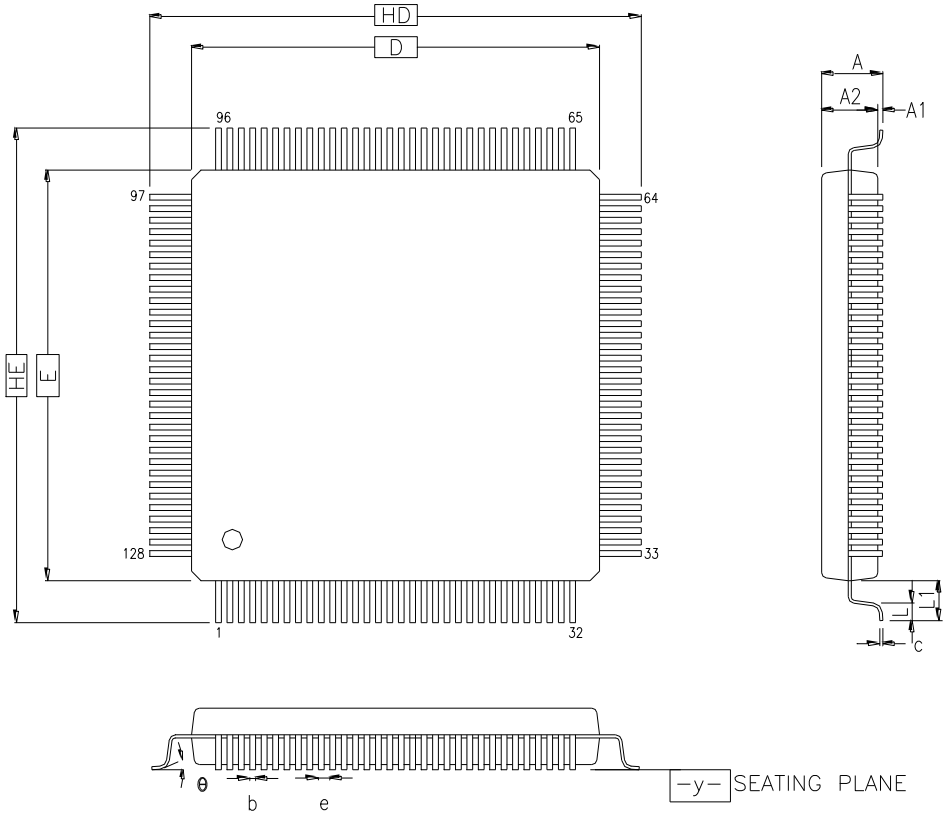

COTROL DIMENSIONS ARE IN MILLIMETERS.

SYMBOL	MILLIMETER			INCH		
	MIN.	NOM.	MAX.	MIN.	NOM.	MAX.
A	—	—	1.60	—	—	0.063
A_1	0.05	—	0.15	0.002	—	0.006
A_2	1.35	1.40	1.45	0.053	0.055	0.057
HD	16.00 BSC.			0.630 BSC.		
D	14.00 BSC.			0.551 BSC.		
HE	16.00 BSC.			0.630 BSC.		
E	14.00 BSC.			0.551 BSC.		
b	0.13	0.16	0.23	0.005	0.006	0.009
e	0.40 BSC.			0.016 BSC.		
θ	0°	3.5°	7°	0°	3.5°	7°
c	0.09	—	0.20	0.004	—	0.008
L	0.45	0.60	0.75	0.018	0.024	0.030
L_1	1.00 REF			0.039 REF		
y	–	–	0.1	–	–	0.004

10 ABBREVIATIONS

10.1 Abbreviations

Acronym	Description
ACMP	Analog Comparator Controller
ADC	Analog-to-Digital Converter
AES	Advanced Encryption Standard
APB	Advanced Peripheral Bus
AHB	Advanced High-Performance Bus
BOD	Brown-out Detection
CAN	Controller Area Network
DAP	Debug Access Port
DES	Data Encryption Standard
EADC	Enhanced Analog-to-Digital Converter
EBI	External Bus Interface
EMAC	Ethernet MAC Controller
EPWM	Enhanced Pulse Width Modulation
FIFO	First In, First Out
FMC	Flash Memory Controller
FPU	Floating-point Unit
GPIO	General-Purpose Input/Output
HCLK	The Clock of Advanced High-Performance Bus
HIRC	12 MHz Internal High Speed RC Oscillator
HXT	4~32 MHz External High Speed Crystal Oscillator
IAP	In Application Programming
ICP	In Circuit Programming
ISP	In System Programming
LDO	Low Dropout Regulator
LIN	Local Interconnect Network
LIRC	10 kHz internal low speed RC oscillator (LIRC)
MPU	Memory Protection Unit
NVIC	Nested Vectored Interrupt Controller
PCLK	The Clock of Advanced Peripheral Bus
PDMA	Peripheral Direct Memory Access
PLL	Phase-Locked Loop
PWM	Pulse Width Modulation

QEI	Quadrature Encoder Interface
SD	Secure Digital
SPI	Serial Peripheral Interface
SPS	Samples per Second
TDES	Triple Data Encryption Standard
TK	Touch Key
TMR	Timer Controller
UART	Universal Asynchronous Receiver/Transmitter
UCID	Unique Customer ID
USB	Universal Serial Bus
WDT	Watchdog Timer
WWDT	Window Watchdog Timer

Table 10.1-1 List of Abbreviations

11 REVISION HISTORY

Date	Revision	Description
2018.12.24	1.00	Initial version.
2019.02.25	1.01	1. Modified ISP ROM size in section 3.2. 2. Modified HIRC trim reference clock in section 6.27.2.
2019.07.15	1.02	1. Updated TBD values in Chapter 8. 2. Changed test condition of data retention from T_A to T_J in section 8.7. 3. Updated Figure 6.3-6 to add a USB block and remove the temperature sensor block. 4. Added multi-function pin tables in section 4.1.
2019.08.26	1.03	1. Updated Figure 8.4-1 HIRC vs. Temperature in section 8.4.1. 2. Removed Figure 8.4-2 LIRC vs. Temperature in section 8.4.2.
2019.11.04	2.00	Added new part numbers for M031xI / M032xI / M031xG / M032xG / M032xC / M032xD and updated the description of the new part numbers.
2020.04.29	2.01	1. Modified Multi-function Pin Diagram name and Multi-function Pin Table in section 4.1.4.1 and 4.1.4.2. 2. Changed the Pin Description tables to Pin Mapping tables and Pin Function Description table in section 4.2 and 4.3. 3. Updated Supply Current Characteristics for M03xB/M03xC/M03xD/ M03xE in section 8.3.1. 4. Updated Band-gap voltage value in Table 8.2-1. 5. Modified the value of SYS_RSTSTS after Power-On-Reset(POR) in Table 6.3-1 6. Updated I/O Output Characteristics in Table 8.3-11 7. Added a note about the Safety factor for High Speed Crystal(HXT) in Table 8.4-4 8. Added notes about the hardware reference design for ICE_DAT, ICE_CLK and nRESET pins in section 4.3 and chapter 7. 9. Updated QFN 33L (4X4x0.8 mm Pitch:0.40 mm) Package Dimensions in section 9.3
2020.09.29	2.02	1. Added a new part number M031TE3AE and updated the description of the new part number in chapter 3 and 4. 2. Updated Figure 8.4-1 HIRC vs. Temperature in section 8.4.1. 3. Added Figure 8.4-2 LIRC vs. Temperature in section 8.4.2.

Important Notice

Nuvoton Products are neither intended nor warranted for usage in systems or equipment, any malfunction or failure of which may cause loss of human life, bodily injury or severe property damage. Such applications are deemed, "Insecure Usage".

Insecure usage includes, but is not limited to: equipment for surgical implementation, atomic energy control instruments, airplane or spaceship instruments, the control or operation of dynamic, brake or safety systems designed for vehicular use, traffic signal instruments, all types of safety devices, and other applications intended to support or sustain life.

All Insecure Usage shall be made at customer's risk, and in the event that third parties lay claims to Nuvoton as a result of customer's Insecure Usage, customer shall indemnify the damages and liabilities thus incurred by Nuvoton.

Please note that all data and specifications are subject to change without notice.
All the trademarks of products and companies mentioned in this datasheet belong to their respective owners.