Data Sheet | Item Number: 788-412

Relay module; Nominal input voltage: 24 VDC; 2 changeover contacts; Limiting continuous current: 8 A; with gold contacts; Red status indicator; Module width: 15 mm; 2,50 mm²; gray

https://www.wago.com/788-412



Color: gray

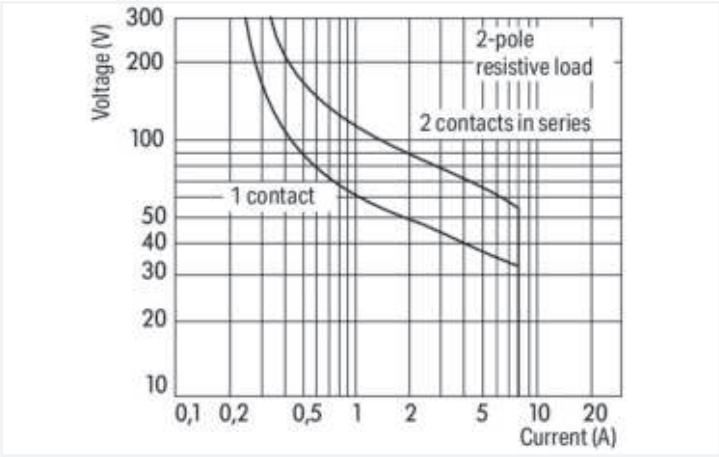

DC load limit curve

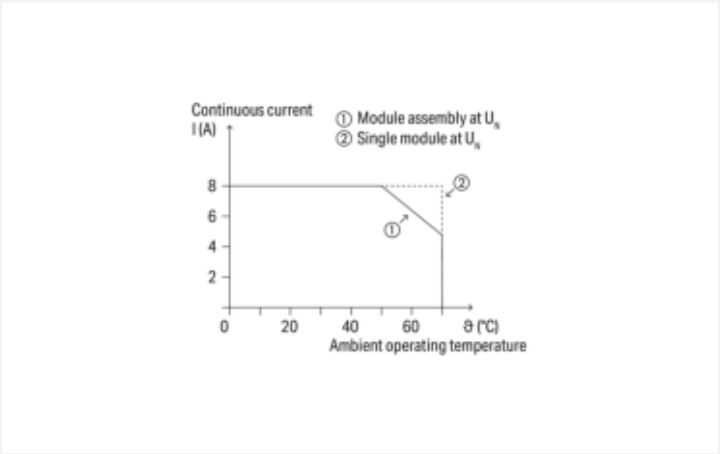

Current-carrying capacity curve

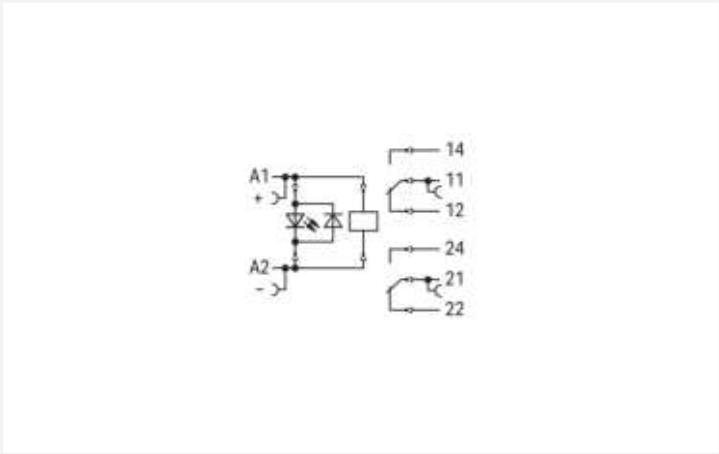

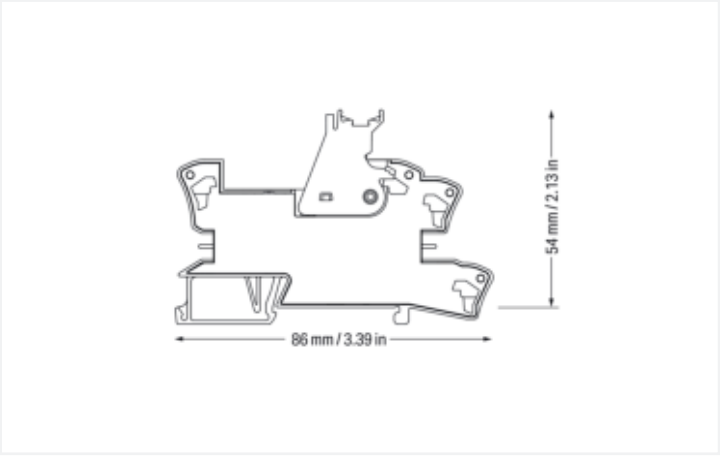

Continued on next page

Notes

Safety Information	A separator plate (e.g., 209-191) must be used for voltages exceeding 250 V between adjacent relay modules and to comply with reinforced insulation requirements.
Note	Reinforced insulation between coil and contacts To prevent damaging the gold layer, 30 VDC switching voltages and 50 mA currents must not be exceeded. Higher switching power eventually evaporates the gold layer. The resulting deposits in the housing may reduce service life. To protect the relay coils and contacts, inductive loads must be dampened with an effective protection circuit.

Technical data

Control circuit

Nominal input voltage U_N	24 VDC
Input voltage range	±10 %
Nominal input current at U_N	17 mA

Load circuit

Number of changeover/switchover contacts	2
Contact material (relay)	AgNi + Au
Limiting continuous current	8 A
Switching Voltage, Max.	250 VAC
Switching power (resistive) max.	AC 2000 VA; DC (see load limit curve)
Utilization category	AC-15: 3 A / 250 VAC DC-13: 2 A / 24 VDC
Recommended minimum load	5 V / 2 mA / 50 mW
Pull-in time (typ.)	7 ms
Drop-out time (typ.)	3 ms
Bounce time (typ.)	6 ms
Electrical life (NO; resistive load; 23 °C)	100 x 10^3 switching operations
Mechanical life	30 x 10^6 switching operations
Switching frequency with/without load (max.)	10 min^{-1} / 1200 min^{-1}

Signaling

Status indicator	Red LED

Safety and protection

Rated Voltage	250 V
Rated impulse withstand voltage	4 kV
Pollution degree	3
Dielectric strength (control/load circuit) (AC, 1 min)	5 kVrms
Dielectric strength (open contact) (AC, 1 min)	1 kVrms
Dielectric strength (load/load circuit) (AC, 1 min)	2.5 kVrms
Safety Information	A separator plate (e.g., 209-191) must be used for voltages exceeding 250 V between adjacent relay modules and to comply with reinforced insulation requirements.
Protection type	IP20

Connection Data

Connection technology	Push-in CAGE CLAMP®
Solid conductor	0.34 … 2.5 mm² / 22 … 14 AWG
Fine-stranded conductor	0.34 … 2.5 mm² / 22 … 14 AWG
Strip length	9 … 10 mm / 0.35 … 0.39 inches

Physical data

Width	15 mm / 0.591 inches
Height	86 mm / 3.386 inches
Depth from upper-edge of DIN-rail	54 mm / 2.126 inches

Mechanical data

Mounting type	DIN-35 rail

Material data

Note (material data)	Information on material specifications can be found here
Color	gray
Fire load	0.606 MJ
Weight	47.7 g

Environmental requirements

Ambient temperature (operation at U_N)	-40 … +70 °C
Ambient temperature UL (operation at U_N)	-40 … +50 °C
Ambient temperature (storage)	-40 … +70 °C
Processing temperature	-25 … +50 °C
Temperature range of connection cable	≥ ($T_{ambient}$ + 20 K)

Standards and Specifications

Standards/specifications	EN 61010-2-201 EN 61810-1 EN 61373 UL 508

Basic relay

WAGO Basic Relay	788-157

Commercial data

Product Group	6 (INTERFACE ELECTRONIC)
PU (SPU)	20 (1) pcs
Packaging type	Box
Country of origin	CN
GTIN	4045454352165
Customs tariff number	85364900990

Product Classification

UNSPSC	39122334
eCl@ss 10.0	27-37-16-01
eCl@ss 9.0	27-37-16-01
ETIM 9.0	EC001437
ETIM 10.0	EC001437
ECCN	NO US CLASSIFICATION

Continued on next page

Environmental Product Compliance

RoHS Compliance Status	Compliant,No Exemption

Approvals / Certificates

General approvals

Approval	Standard	Certificate Name
EAC GZO Almaty Standart	TP TC 004/2011	EAC CoC 03084
UL Underwriters Laboratories Inc. (ORDINARY LOCATIONS)	UL 508	E175199 Vol.1 Sec.6

Declarations of conformity and manufacturer's declarations

Approval	Standard	Certificate Name
EU-Declaration of Conformity WAGO GmbH & Co. KG	-	-
EU-Declaration of Conformity WAGO GmbH & Co. KG	-	-
UK-Declaration of Conformity WAGO GmbH & Co. KG	-	-

Downloads

Environmental Product Compliance

Compliance Search

Environmental Product Compliance 788-412

Documentation

Bid Text

788-412	19.02.2019	xml 4.94 KB
788-412	25.01.2019	docx 16.82 KB

Instruction Leaflet

Sockets with Elementary Relay/ SSR	V 1.0.1 09.10.2020	pdf 2271.22 KB

CAD/CAE-Data

CAD data

2D/3D Models 788-412

CAE data

EPLAN Data Portal 788-412

WSCAD Universe 788-412

ZUKEN Portal 788-412

Continued on next page

1 Compatible Products

1.1 Optional Accessories

1.1.1 Basic relay

1.1.1.1 Basic relay

Item No.: 788-157
Basic relay; Nominal input voltage: 24 VDC; 2 changeover contacts; Limiting continuous current: 8 A; with gold contacts; Module width: 13 mm; Module height: 15 mm

1.1.2 Ferrule

1.1.2.1 Ferrule

Item No.: 216-241
Ferrule; Sleeve for 0.5 mm² / 20 AWG; insulated; electro-tin plated; electrolytic copper; gastight crimped; acc. to DIN 46228, Part 4/09.90; white

Item No.: 216-242
Ferrule; Sleeve for 0.75 mm² / 18 AWG; insulated; electro-tin plated; electrolytic copper; gastight crimped; acc. to DIN 46228, Part 4/09.90; gray



Item No.: 216-243
Ferrule; Sleeve for 1 mm² / AWG 18; insulated; electro-tin plated; electrolytic copper; gastight crimped; acc. to DIN 46228, Part 4/09.90; red



Item No.: 216-244
Ferrule; Sleeve for 1.5 mm² / AWG 16; insulated; electro-tin plated; electrolytic copper; gastight crimped; acc. to DIN 46228, Part 4/09.90; black



Item No.: 216-542
Twin ferrule; Sleeve for 2 x 1 mm² / AWG 2 x 18; red, insulated; 12 mm long; red

1.1.3 Indicators

1.1.3.1 Status indication



Item No.: 788-120
Accessories for relay modules; Operation status indicator: red; Nominal operating voltage: 24 VDC

1.1.4 Jumper

1.1.4.1 Jumper

Item No.: 788-118
Jumper; for jumper slot; 2-way; from 1 to 3; insulated; light gray

Item No.: 788-113
Jumper; for jumper slot; 2-way; insulated; light gray



Item No.: 859-402
Jumper; for jumper slot; 2-way; insulated; light gray

Item No.: 788-114
Jumper; for jumper slot; 3-way; insulated; light gray

Item No.: 788-115
Jumper; for jumper slot; 4-way; insulated; light gray

Item No.: 788-116
Jumper; for jumper slot; 6-way; insulated; light gray

Item No.: 788-117
Jumper; for jumper slot; 8-way; insulated; light gray

Continued on next page

1.1.5 Marking

1.1.5.1 Double marker carrier



Item No.: 209-128
Adaptor; gray

1.1.5.2 Group marker carrier



Item No.: 249-105
Group marker carrier; gray



Item No.: 209-145
Group marker carrier; white

1.1.5.3 Marker

Item No.: 209-183
Marker; white

Item No.: 793-502
WMB marking card; as card; MARKED; 1 ... 10 (10x); not stretchable; Horizontal marking; snap-on type; white

Item No.: 793-503
WMB marking card; as card; MARKED; 11 ... 20 (10x); not stretchable; Horizontal marking; snap-on type; white

Item No.: 793-504
WMB marking card; as card; MARKED; 21 ... 30 (10x); not stretchable; Horizontal marking; snap-on type; white

Item No.: 793-505
WMB marking card; as card; MARKED; 31 ... 40 (10x); not stretchable; Horizontal marking; snap-on type; white

Item No.: 793-501
WMB marking card; as card; not stretchable; plain; snap-on type; white



Item No.: 2009-115
WMB-Inline; for Smart Printer; 1500 pieces on roll; stretchable 5 - 5.2 mm; plain; snap-on type; white

1.1.5.4 Marking device



Item No.: 210-110
Fiber-tip pen

1.1.5.5 Marking strip

Item No.: 2009-110
Marking strips; for Smart Printer; on reel; not stretchable; plain; snap-on type; white

1.1.5.6 Protective marker cover

Item No.: 209-184
Protection cover; transparent

Continued on next page

1.1.6 Tool

1.1.6.1 Operating tool



Item No.: 210-720
Operating tool; Blade: 3.5 x 0.5 mm; with a partially insulated shaft; multicoloured

Installation Notes

Conductor termination



Conductor termination

Commoning

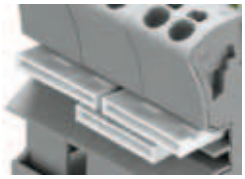

Easy commoning using adjacent jumpers

Marking



Marking using WMB Multi markers and group marker carriers.