Data Sheet | Item Number: 282-122

2-conductor fuse terminal block; for 5 x 20 mm miniature metric fuse; without blown fuse indication; for DIN-rail 35 x 15 and 35 x 7.5; 6 mm²; CAGE CLAMP®; gray

https://www.wago.com/282-122

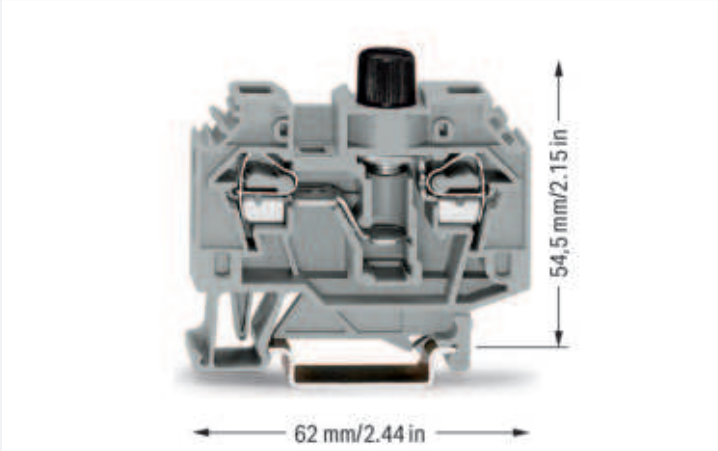



Color: gray



Similar to illustration

Fuse terminal block, 282 Series, gray

Easily, quickly and safely connect conductors with this fuse terminal block (item number 282-122). Conductors can only be connected to this fuse terminal block if their strip length is between 12 and 13 mm . This product features conductor terminals and utilizes CAGE CLAMP®. Our highly-rated and maintenance-free CAGE CLAMP® connection makes it easy to connect all types of conductors without having to prepare the conductor. For example, you don't need to crimp ferrules. This fuse terminal block is suitable for conductor cross sections ranging from 0.2 mm² to 6 mm².

Electrical data

Ratings per IEC/EN

Nominal voltage (III/3)	500 V
Rated impulse withstand voltage (III / 3)	6 kV
Rated current	10 A
Legend (ratings)	(III / 3) ≙ Overvoltage category III / Pollution degree 3

General information

Fuse receptacle	screwed
Fuse type	Cylindrical fuse; 5 x 20 mm
Wiring direction	Side-entry wiring

Connection Data

Clamping units	2
Total number of potentials	2
Number of levels	1

Connection 1

Connection technology	CAGE CLAMP®
Actuation type	Operating tool
Connectable conductor materials	Copper
Solid conductor	0.2 … 6 mm² / 24 … 10 AWG
Fine-stranded conductor	0.2 … 6 mm² / 24 … 10 AWG
Strip length	12 … 13 mm / 0.47 … 0.51 inches
Wiring direction	Side-entry wiring

Physical data

Width	13 mm / 0.512 inches
Height	62 mm / 2.441 inches
Depth from upper-edge of DIN-rail	54.5 mm / 2.146 inches

Mechanical data

Design	horizontal type
Mounting type	DIN-35 rail
Marking level	Side marking

Material data

Note (material data)	Information on material specifications can be found here
Color	gray
Material group	I
Insulation material (main housing)	Polyamide (PA66)
Flammability class per UL94	V0
Fire load	0.429 MJ
Weight	26.6 g

Environmental requirements

Processing temperature	-35 … +85 °C
Continuous operating temperature	-60 … +105 °C

Commercial data

Product Group	1 (Rail Mounted Terminal Blocks)
PU (SPU)	40 pcs
Packaging type	Box
Country of origin	CN
GTIN	4044918562027
Customs tariff number	85369095000

Continued on next page

Product Classification

UNSPSC	39121410
eCl@ss 10.0	27-14-11-16
eCl@ss 9.0	27-14-11-16
ETIM 9.0	EC000899
ETIM 10.0	EC000899
ECCN	NO US CLASSIFICATION

Environmental Product Compliance

RoHS Compliance Status	Compliant,No Exemption

Approvals / Certificates

General approvals

Approval	Standard	Certificate Name
KEMA/KEUR DEKRA Certification B.V.	EN 60947	NTR NL-7135
KEMA/KEUR DEKRA Certification B.V.	EN 60947	2160584.31
UL Underwriters Laboratories Inc.	UL 1059	20190731-E45172

Declarations of conformity and manufacturer's declarations

Approval	Standard	Certificate Name
EU-Declaration of Conformity WAGO GmbH & Co. KG	-	-
UK-Declaration of Conformity WAGO GmbH & Co. KG	-	-

Approvals for marine applications

Approval	Standard	Certificate Name
ABS American Bureau of Shipping	EN 60947	24-0152298-PDA
DNV GL Det Norske Veritas, Germanischer Lloyd	-	TAE00001V2
PRS Polski Rejestr Statków	-	TE/1094/880590/23

Downloads

Environmental Product Compliance

Compliance Search

Environmental Product Compliance 282-122

Continued on next page

Documentation

Bid Text

282-122	19.02.2019	xml 3.29 KB
282-122	12.06.2017	doc 24.00 KB

CAD/CAE-Data

CAD data

2D/3D Models 282-122

CAE data

EPLAN Data Portal 282-122

WSCAD Universe 282-122

ZUKEN Portal 282-122

1 Compatible Products

1.1 Required Accessories

1.1.1 End plate

1.1.1.1 End plate



Item No.: 282-311
End and intermediate plate; 4 mm thick; gray



Item No.: 282-312
End and intermediate plate; 4 mm thick; orange

1.2 Optional Accessories

1.2.1 DIN-rail

1.2.1.1 Mounting accessories



Item No.: 210-196
Aluminum carrier rail; 35 x 8.2 mm; 1.6 mm thick; 2 m long; unslotted; similar to EN 60715; silver-colored



Item No.: 210-198
Copper carrier rail; 35 x 15 mm; 2.3 mm thick; 2 m long; unslotted; according to EN 60715; copper-colored



Item No.: 210-508
Steel carrier rail; 35 x 15 mm; 1.5 mm thick; 2 m long; slotted; galvanized; similar to EN 60715; silver-colored



Item No.: 210-197
Steel carrier rail; 35 x 15 mm; 1.5 mm thick; 2 m long; slotted; similar to EN 60715; silver-colored



Item No.: 210-506
Steel carrier rail; 35 x 15 mm; 1.5 mm thick; 2 m long; unslotted; galvanized; similar to EN 60715; silver-colored



Item No.: 210-114
Steel carrier rail; 35 x 15 mm; 1.5 mm thick; 2 m long; unslotted; similar to EN 60715; silver-colored



Item No.: 210-118
Steel carrier rail; 35 x 15 mm; 2.3 mm thick; 2 m long; unslotted; according to EN 60715; silver-colored



Item No.: 210-115
Steel carrier rail; 35 x 7.5 mm; 1 mm thick; 2 m long; slotted; according to EN 60715; "Hole width 18 mm; silver-colored



Item No.: 210-112
Steel carrier rail; 35 x 7.5 mm; 1 mm thick; 2 m long; slotted; according to EN 60715; "Hole width 25 mm; silver-colored



Item No.: 210-504
Steel carrier rail; 35 x 7.5 mm; 1 mm thick; 2 m long; slotted; galvanized; according to EN 60715; silver-colored



Item No.: 210-113
Steel carrier rail; 35 x 7.5 mm; 1 mm thick; 2 m long; unslotted; according to EN 60715; silver-colored



Item No.: 210-505
Steel carrier rail; 35 x 7.5 mm; 1 mm thick; 2 m long; unslotted; galvanized; according to EN 60715; silver-colored

Continued on next page

1.2.2 Ferrule

1.2.2.1 Ferrule

Item No.: 216-262
Ferrule; Sleeve for 0.75 mm² / 18 AWG; insulated; electro-tin plated; electrolytic copper; gastight crimped; acc. to DIN 46228, Part 4/09.90; gray



Item No.: 216-263
Ferrule; Sleeve for 1 mm² / AWG 18; insulated; electro-tin plated; electrolytic copper; gastight crimped; acc. to DIN 46228, Part 4/09.90; red



Item No.: 216-264
Ferrule; Sleeve for 1.5 mm² / AWG 16; insulated; electro-tin plated; electrolytic copper; gastight crimped; acc. to DIN 46228, Part 4/09.90; black



Item No.: 216-266
Ferrule; Sleeve for 2.5 mm² / AWG 14; insulated; electro-tin plated; electrolytic copper; gastight crimped; acc. to DIN 46228, Part 4/09.90; blue

Item No.: 216-267
Ferrule; Sleeve for 4 mm² / AWG 12; insulated; electro-tin plated; electrolytic copper; gastight crimped; acc. to DIN 46228, Part 4/09.90; gray

1.2.3 Fuse

1.2.3.1 Fuse



Item No.: 282-451
Miniature metric fuse; without indicator; 5 x 20 mm; medium-slow

1.2.4 Installation

1.2.4.1 Cover



Item No.: 709-153
Cover; Type 1; suitable for cover carrier, type 1; 1 m long; transparent

1.2.4.2 Mounting accessories



Item No.: 209-106
Mounting carrier; for isolated mounting on DIN 35 rails; gray



Item No.: 249-116
Screwless end stop; 6 mm wide; for DIN-rail 35 x 15 and 35 x 7.5; gray

1.2.5 Jumper

1.2.5.1 Jumper

Item No.: 282-402
Jumper; insulated; gray



Item No.: 282-409
Jumper; insulated; gray



Item No.: 282-424
Jumper; insulated; orange



Item No.: 282-422
Jumper; insulated; yellow-green



Item No.: 709-110
Wire commoning chain; 2.5 mm²; insulated; black



Item No.: 709-111
Wire commoning chain; 2.5 mm²; insulated; black



Item No.: 709-112
Wire commoning chain; 2.5 mm²; insulated; black

Continued on next page

1.2.6 Marking

1.2.6.1 Group marker carrier



Item No.: 209-143
Group marker carrier; gray



Item No.: 209-144
Group marker carrier; gray



Item No.: 249-105
Group marker carrier; gray

1.2.6.2 Marker



Item No.: 793-5501/000-006
WMB marking card; as card; for terminal block width 5 - 17.5 mm; stretchable 5 - 5.2 mm; plain; snap-on type; blue



Item No.: 793-5501/000-014
WMB marking card; as card; for terminal block width 5 - 17.5 mm; stretchable 5 - 5.2 mm; plain; snap-on type; brown



Item No.: 793-5501/000-007
WMB marking card; as card; for terminal block width 5 - 17.5 mm; stretchable 5 - 5.2 mm; plain; snap-on type; gray



Item No.: 793-5501/000-023
WMB marking card; as card; for terminal block width 5 - 17.5 mm; stretchable 5 - 5.2 mm; plain; snap-on type; green



Item No.: 793-5501/000-017
WMB marking card; as card; for terminal block width 5 - 17.5 mm; stretchable 5 - 5.2 mm; plain; snap-on type; light green



Item No.: 793-5501/000-012
WMB marking card; as card; for terminal block width 5 - 17.5 mm; stretchable 5 - 5.2 mm; plain; snap-on type; orange



Item No.: 793-5501/000-005
WMB marking card; as card; for terminal block width 5 - 17.5 mm; stretchable 5 - 5.2 mm; plain; snap-on type; red



Item No.: 793-5501/000-024
WMB marking card; as card; for terminal block width 5 - 17.5 mm; stretchable 5 - 5.2 mm; plain; snap-on type; violet

Item No.: 793-5501
WMB marking card; as card; for terminal block width 5 - 17.5 mm; stretchable 5 - 5.2 mm; plain; snap-on type; white



Item No.: 793-5501/000-002
WMB marking card; as card; for terminal block width 5 - 17.5 mm; stretchable 5 - 5.2 mm; plain; snap-on type; yellow



Item No.: 793-501/000-006
WMB marking card; as card; not stretchable; plain; snap-on type; blue



Item No.: 793-501/000-007
WMB marking card; as card; not stretchable; plain; snap-on type; gray



Item No.: 793-501/000-023
WMB marking card; as card; not stretchable; plain; snap-on type; green



Item No.: 793-501/000-017
WMB marking card; as card; not stretchable; plain; snap-on type; light green



Item No.: 793-501/000-012
WMB marking card; as card; not stretchable; plain; snap-on type; orange



Item No.: 793-501/000-005
WMB marking card; as card; not stretchable; plain; snap-on type; red



Item No.: 793-501/000-024
WMB marking card; as card; not stretchable; plain; snap-on type; violet

Item No.: 793-501
WMB marking card; as card; not stretchable; plain; snap-on type; white



Item No.: 793-501/000-002
WMB marking card; as card; not stretchable; plain; snap-on type; yellow



Item No.: 2009-115/000-006
WMB-Inline; for Smart Printer; 1500 pieces on roll; stretchable 5 - 5.2 mm; plain; snap-on type; blue



Item No.: 2009-115/000-007
WMB-Inline; for Smart Printer; 1500 pieces on roll; stretchable 5 - 5.2 mm; plain; snap-on type; gray



Item No.: 2009-115/000-023
WMB-Inline; for Smart Printer; 1500 pieces on roll; stretchable 5 - 5.2 mm; plain; snap-on type; green



Item No.: 2009-115/000-017
WMB-Inline; for Smart Printer; 1500 pieces on roll; stretchable 5 - 5.2 mm; plain; snap-on type; light green



Item No.: 2009-115/000-012
WMB-Inline; for Smart Printer; 1500 pieces on roll; stretchable 5 - 5.2 mm; plain; snap-on type; orange



Item No.: 2009-115/000-024
WMB-Inline; for Smart Printer; 1500 pieces on roll; stretchable 5 - 5.2 mm; plain; snap-on type; violet



Item No.: 2009-115
WMB-Inline; for Smart Printer; 1500 pieces on roll; stretchable 5 - 5.2 mm; plain; snap-on type; white



Item No.: 2009-115/000-002
WMB-Inline; for Smart Printer; 1500 pieces on roll; stretchable 5 - 5.2 mm; plain; snap-on type; yellow

Continued on next page

1.2.7 Protective warning marker

1.2.7.1 Cover



Item No.: 282-405
Protective warning marker; for 5 terminal blocks; with high-voltage symbol, black; yellow

1.2.8 Test and measurement

1.2.8.1 Testing accessories



Item No.: 249-147
B-type test plug module; modular; 2,50 mm²; gray



Item No.: 209-170
Test plug adapter; 8.3 mm wide; for 4 mm Ø test plugs; suitable for 1.5 mm² - 10 mm² tbs; gray



Item No.: 281-407
Test plug; 6 mm wide; Nominal current 24 A; for 0.08 mm² - 2.5 mm²; gray

1.2.9 Tool

1.2.9.1 Operating tool



Item No.: 210-721
Operating tool; Blade: 5.5 x 0.8 mm; with a partially insulated shaft; multicoloured

Installation Notes

Installation



Snapping side-entry rail-mount terminal blocks onto the DIN-rail.

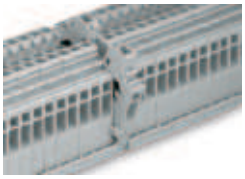

Quick assembly keys prevent reverse mounting.



Removing a terminal block from the assembly.

Conductor termination



CAGE CLAMP® connection
Inserting a conductor.
With ferruled conductors, it is necessary to use a terminal block one size larger than the conductor's nominal cross-section.

Continued on next page

Testing



Testing with a test plug.
Picture shows a test plug adapter (209-170).

Marking



Labeling via WMB Multi Marking System.



When operating the handles beyond the locked position, the ratchet allows the tool to open and be removed from the terminal block.

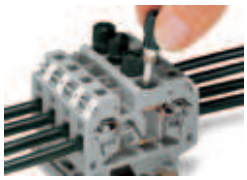

Replacing a fuse.

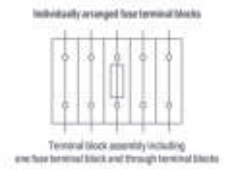

Fuse terminal blocks in individual arrangement

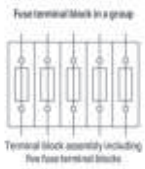

Fuse terminal blocks in block arrangement