606 Series
6 mm Panel Mount Indicators



Certifications & Ratings

- RoHS compliant
- IP67

Application

The 606 Series LED Panel Mount Indicators are designed for a variety of applications such as:

- Main power indication
- Remote power indication
- Status indication
- Maintenance and warning indication
- Instrumentation . . . and many more!

Dimensions

inches [mm]

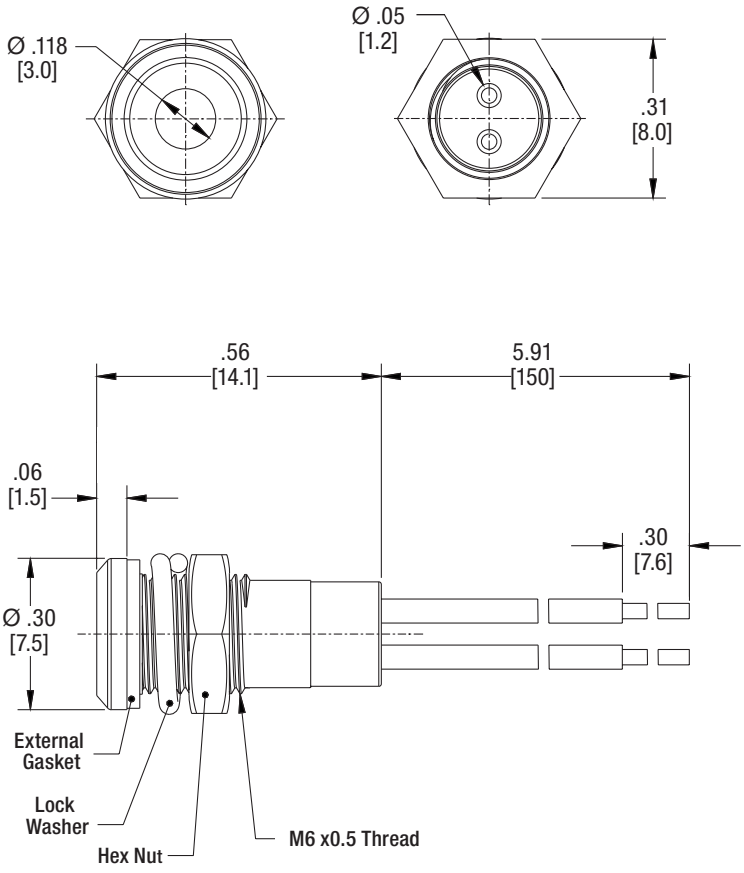

Mechanical Information

Mounting Hole Size:	0.244" (6.2 mm)
Max Panel Thickness:	0.138" (3.5 mm)
Mounting Torque:	0.362 lbs/ft (5 kg/cm) torque

Specifications

Voltage Options:	3 VDC (resistor required) 6, 12, 24, and 28 VDC (no resistor required)
Operating temp:	-40 °C to +85 °C (-40 °F to +185 °F)
Storage Temp:	-40 °C to +100 °C (-40 °F to +212 °F)
Electrical Connection:	26 AWG wire leads
Housing:	Stainless Steel
Wire Leads:	6" -(26 AWG)
Lock washer:	Iron—Nickel Plated
Nut:	Brass—Nickel Plated

Dialight

Ordering Information 606 Series

Part Number	Color	Voltage (V DC)	Current (mA)	Typical Intensity* (mcd)
606-3115-110F	Red	3	15	620
606-3215-110F	Green			2500
606-3315-110F	Yellow			620
606-3415-110F	Blue			620
606-3115-120F	Red	6		620
606-3215-120F	Green			2500
606-3315-120F	Yellow			620
606-3415-120F	Blue			620
606-3115-130F	Red	12		620
606-3215-130F	Green			2500
606-3315-130F	Yellow			620
606-3415-130F	Blue			620
606-3115-140F	Red	24		620
606-3215-140F	Green			2500
606-3315-140F	Yellow			620
606-3415-140F	Blue			620
606-3115-150F	Red	28		620
606-3215-150F	Green			2500
606-3315-150F	Yellow			620
606-3415-150F	Blue			620

Dialight reserves the right to make changes at any time in order to supply the best product possible. The most current version of this document will always be available at: www.dialightsignalsandcomponents.com

Warranty Statement: Except for the warranty expressly provided for [herein/above/below], Dialight disclaims any and all other warranties, express or implied, including, without limitation, any warranties of merchantability, fitness for a particular purpose, title, and noninfringement.